SUPERCHARGER COOLING

COOLANT PUMP (G1225034)

REMOVAL AND INSTALLATION

26.50.01	PUMP - WATER - RENEW	5000 CC, AJ V8, SUPERCHARGED	1.5	USED WITHINS	+
26.50.26	AUXILIARY COOLANT PUMP - RENEW	5000 CC, AJ V8, SUPERCHARGED	0.4	USED WITHINS	+

REMOVAL

WARNING:

Since injury such as scalding could be caused by escaping steam or coolant, make sure the vehicle cooling system is cool prior to carrying out this procedure.

CAUTION:

Engine coolant will damage the paint finished surfaces. If spilt, immediately remove the coolant and clean the area with water.

NOTES:

- Some variation in the illustrations may occur, but the essential

information is always correct.

- This procedure covers the removal and installation of the supercharger auxiliary coolant pump.

1. Refer to: Air Cleaner LH (303-12C, Removal and Installation).

2.

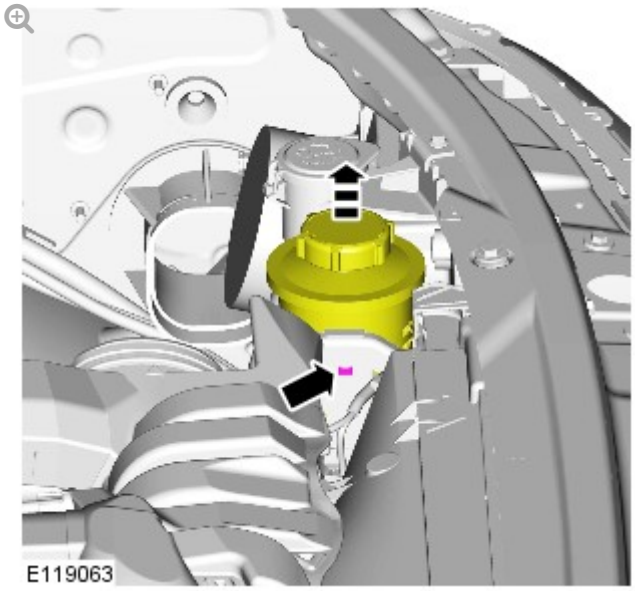

3.

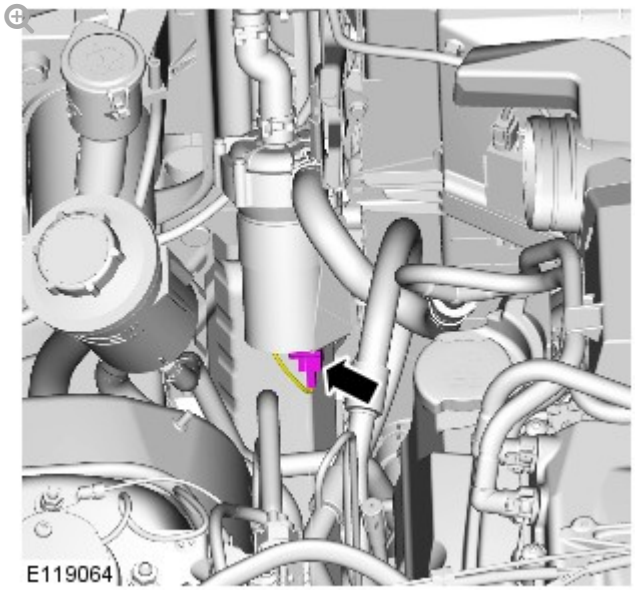

4. **WARNING:**

Fluid loss is unavoidable, use absorbent cloth or a container

to collect the fluid.

CAUTION:

Make sure that all openings are sealed. Use new blanking caps.

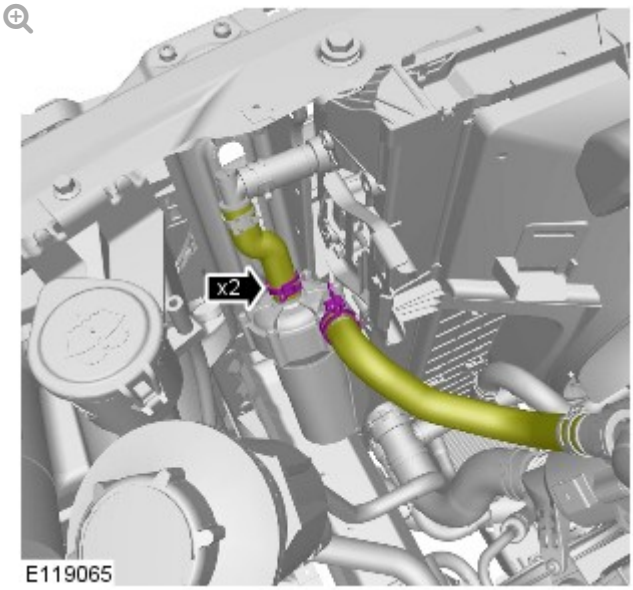

Clamp the hoses to minimize coolant loss.

5.

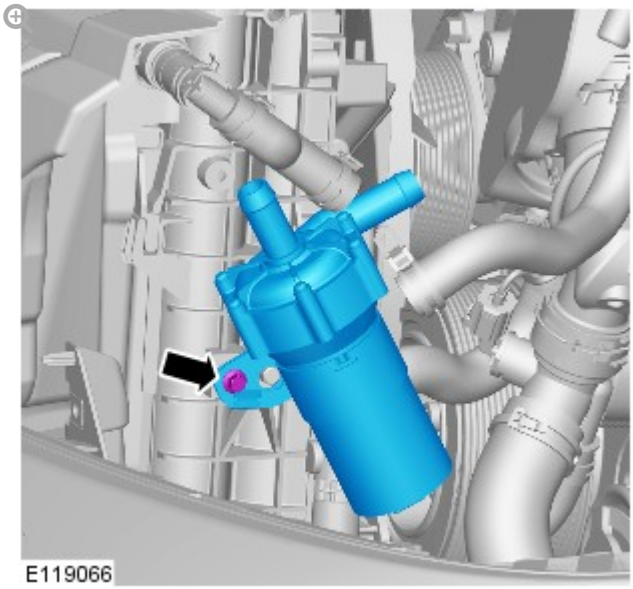

1.

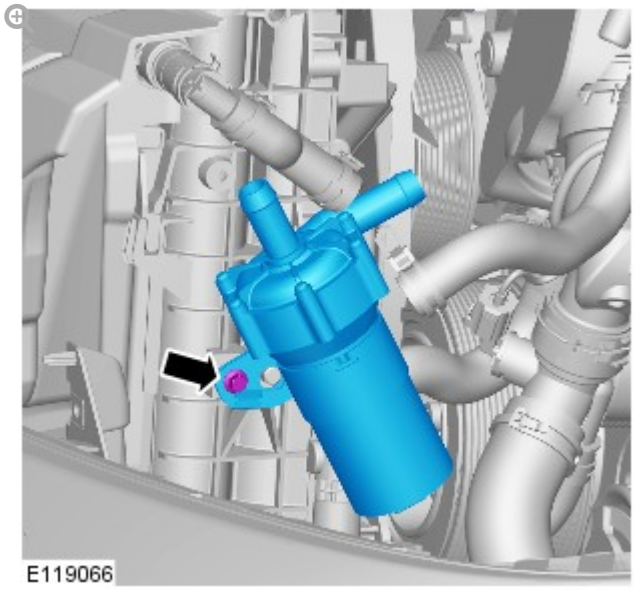

Torque: **6 Nm**

2.

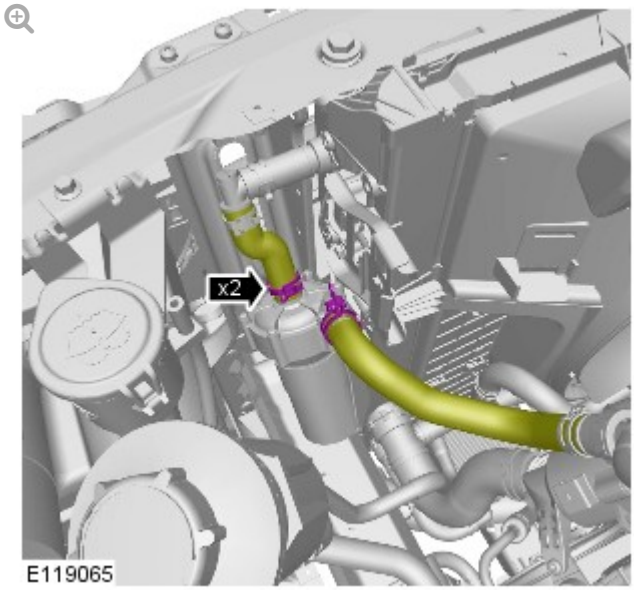

3.

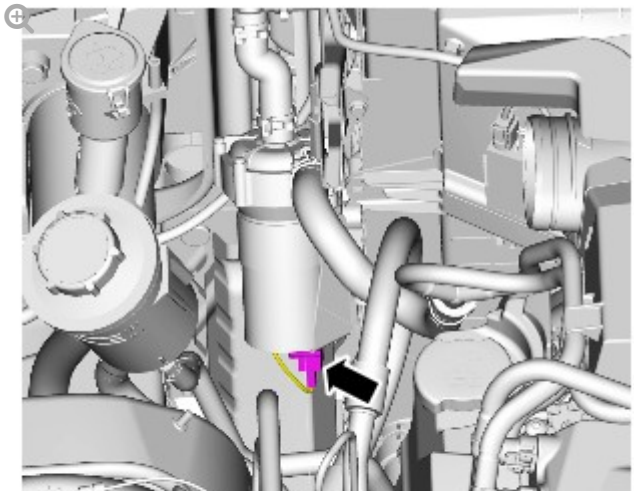

4.

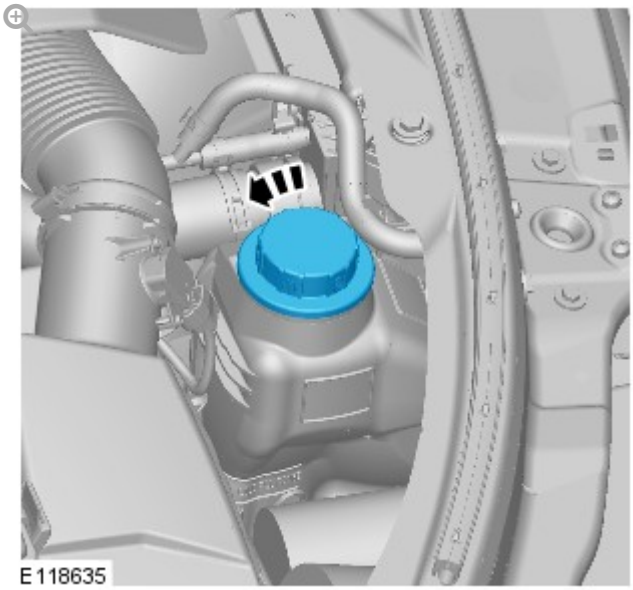

5.

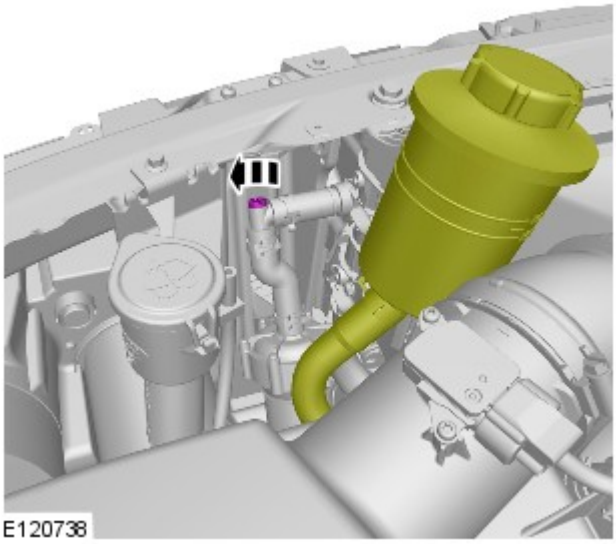

When coolant runs from the bleed point bubble-free, tighten the bleed screw.

6. Install the power steering fluid reservoir.

7. Refer to: Air Cleaner LH (303-12C, Removal and Installation).

8. Check and top-up the coolant.

9. **CAUTION:**

> Damage to the charge air cooler coolant pump will occur if the pump is allowed to cavitate.

NOTE:

> With the ignition on the charge air coolant pump will run, to aid coolant bleed. Make sure the charge air coolant pump is primed prior to running the pump.

Start the engine and allow to run for 30 seconds, stop the engine.

10. Check and top-up the coolant.

2012.0 RANGE ROVER (LM), 303-03

SUPERCHARGER COOLING

RADIATOR (G455372)

REMOVAL AND INSTALLATION

26.40.10	RADIATOR ASSEMBLY - SUPERCHARGER - RENEW	5000 CC, AJ V8, SUPERCHARGED	2.7	USED WITHINS

REMOVAL

1. Disconnect the battery ground cable.
   For additional information, refer to: Specifications (414-00, Specifications).

2. **WARNING:**

   Do not work on or under a vehicle supported only by a jack. Always support the vehicle on safety stands.

   Raise and support the vehicle.

3. Remove the radiator assembly.
   For additional information, refer to: Radiator (303-03, Removal and Installation).

4. 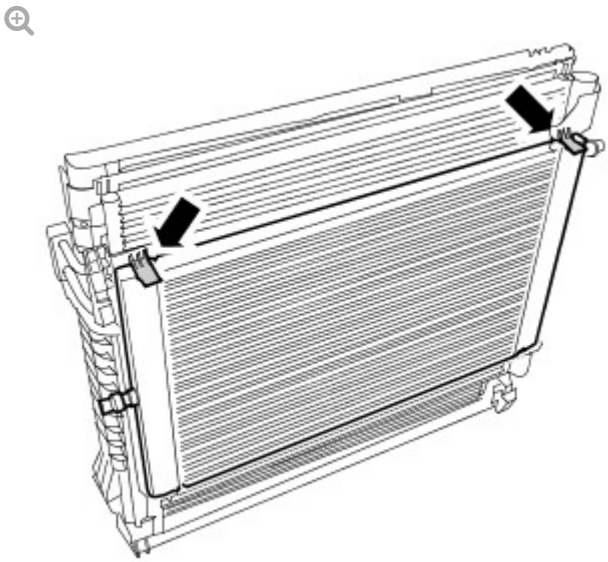

   Remove the supercharger radiator.

   - Release the 2 clips

- Release the 2 clips.

INSTALLATION

1. Install the supercharger radiator.
   - Secure with the clips.
2. Install the radiator assembly.
   For additional information, refer to: Radiator (303-03, Removal and Installation).
3. Connect the battery ground cable.
   For additional information, refer to: Specifications (414-00, Specifications).

2012.0 RANGE ROVER (LM), 303-03

SUPERCHARGER COOLING

RADIATOR (G1225029)

REMOVAL AND INSTALLATION

26.40.01	RADIATOR ASSEMBLY - RENEW	5000 CC, AJ V8, SUPERCHARGED	3.4	USED WITHINS	+

REMOVAL

NOTE:

Removal steps in this procedure may contain installation details.

1. Disconnect the battery ground cable.

Refer to: Specifications (414-00 Battery and Charging System - General Information, Specifications).

2. **WARNING:**

> Make sure to support the vehicle with axle stands.

Raise and support the vehicle.

3. Refer to: Cooling System Partial Draining and Vacuum Filling (303-03B Engine Cooling - TDV8 4.4L Diesel, General Procedures).

4. Refer to: Condenser Fan - V8 5.0L Petrol/V8 S/C 5.0L Petrol (412-03A Air Conditioning, Removal and Installation).

5.

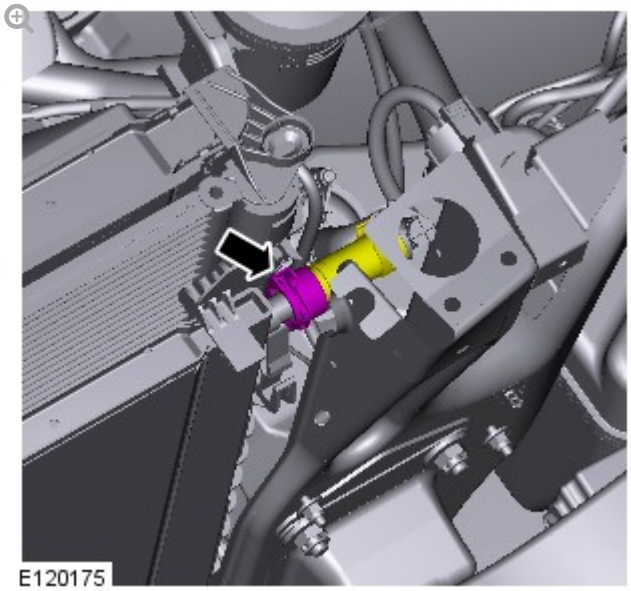

6.

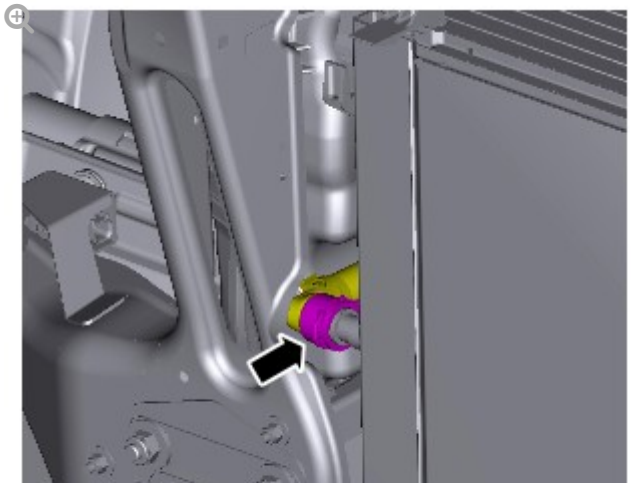

7. **CAUTION:**

> Always protect the cooling pack elements to prevent accidental damage.

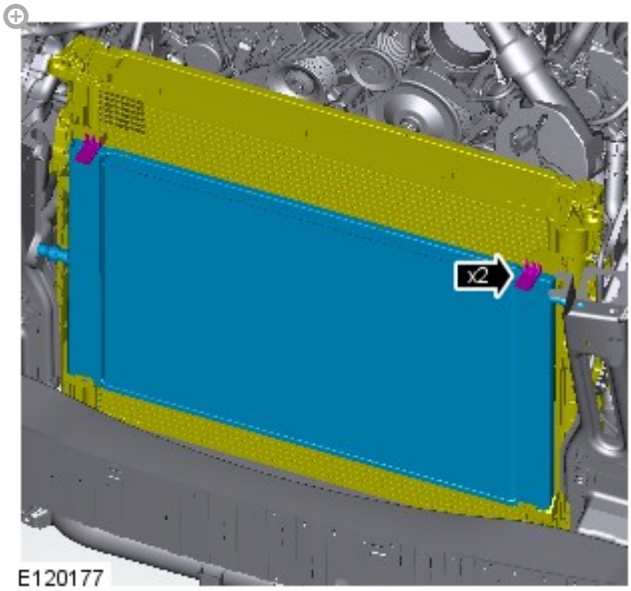

INSTALLATION

1. To install reverse the removal procedure.

FUEL CHARGING AND CONTROLS – V8 S/C 5.0L PETROL

SPECIFICATIONS

Torque Specifications

WARNINGS:

- Do not smoke or carry lighted tobacco or open flame of any type when working on or near any fuel related components. Highly flammable vapors are always present and may ignite. Failure to follow these instructions may result in personal injury.
- Before any work is carried out on the fuel system, ground the vehicle to earth and maintain the ground connection until the work is complete.

CAUTION:

Before disconnecting or removing components, make sure the area around the joint faces and connections are clean. Plug open connections to prevent contamination.

NOTE:

Tighten the fuel rail high pressure fuel pump fuel line unions and fuel rail crossover pipe unions as it is instructed in service manual.

DESCRIPTION	NM	LB-FT	LB-IN
Ignition coil-on-plugs retaining bolts	7	-	62
Spark plugs	20	15	-
Fuel rail retaining bolt	Stage 1 - 20 Stage 2 - 30	Stage 1 - 15 Stage 2 - 22	-
Fuel rail crossover pipe unions	21	15	-
Fuel rail crossover pipe retaining bolts	12	9	-
Fuel pressure regulator	33	24	-
Fuel rail high pressure fuel pump fuel line unions	21	15	-
Fuel rail high pressure fuel pump fuel line M8 bolt	25	18	-
Fuel rail high pressure fuel pump fuel line M6 bolt	11	8	-
Fuel rail high pressure fuel pump fuel line M5 nut	6	-	53
Fuel rail high pressure fuel pump fuel line shield M10 bolt	29	21	-
Fuel rail high-pressure fuel pump fuel line shield M6 bolt	11	8	-
Fuel rail high pressure fuel pump torx bolts	12	9	-
Throttle body retaining bolts	10	7	-
Accessory drive belt idler pulley retaining bolts	25	18	-
Halfshaft bearing retaining bolts	22	16	-
Right-hand engine mount to front subframe retaining bolts	56	41	-
Right-hand engine mount bracket to engine mount retaining nut	100	74	-

2012.0 RANGE ROVER (LM), 303-04

FUEL CHARGING AND CONTROLS – V8 S/C 5.0L PETROL

COMPONENT LOCATION

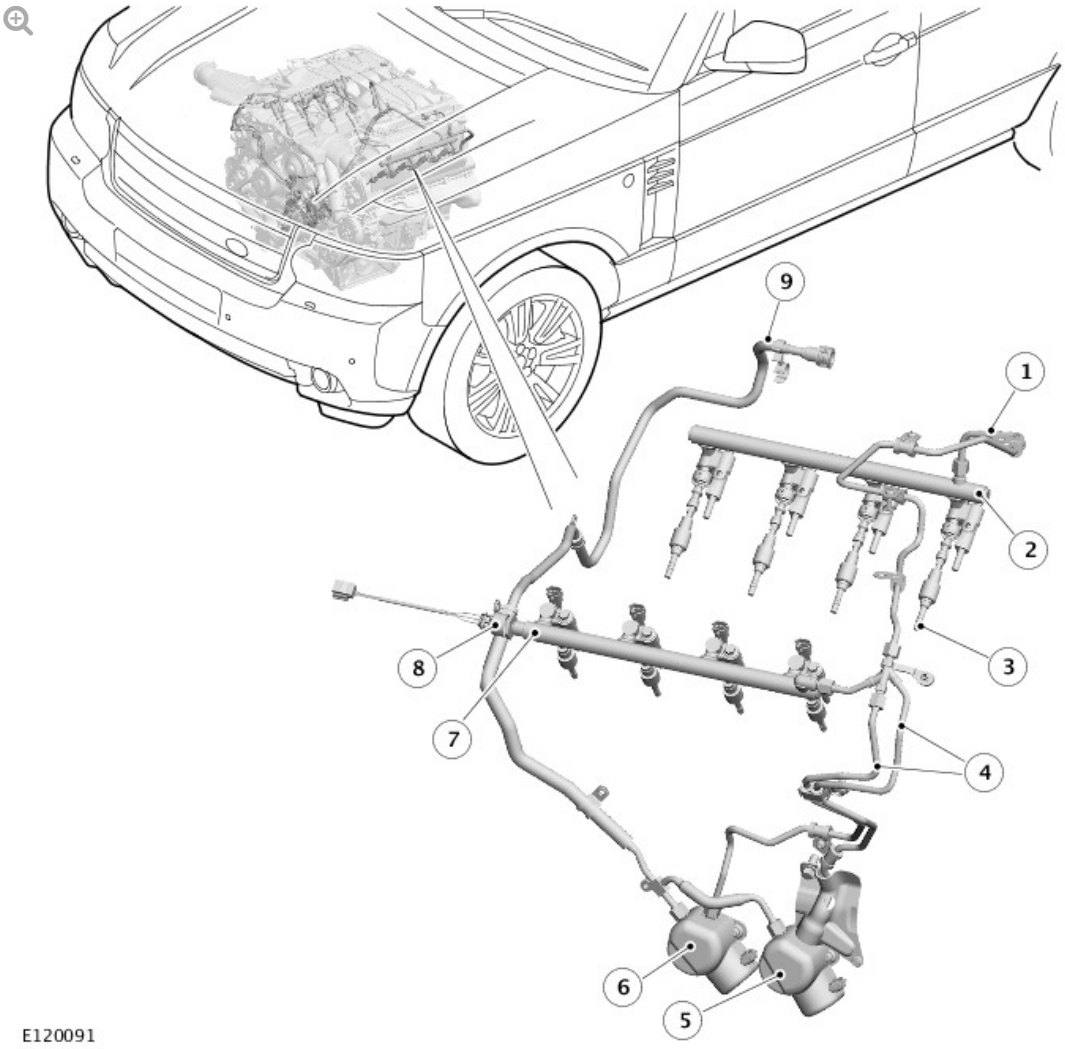

ITEM	DESCRIPTION
1	Crossover tube
2	LH (left hand) fuel rail
3	Fuel injector
4	HP (high pressure) fuel lines
5	HP fuel pump - No.1 (Front)
6	HP fuel pump - No.2 (Rear)
7	RH (right hand) fuel rail
8	FRP (fuel rail pressure) sensor

9	LP (low pressure) fuel lines

INTRODUCTION

The fuel charging and controls system is a gasoline DI (direct injection) system controlled by the ECM (engine control module).

The fuel charging and controls system consists of:

- LP and HP fuel lines.
- Two HP fuel pumps.
- Two fuel rails and a crossover tube.
- A FRP (fuel rail pressure) sensor.
- Eight fuel injectors.

LP fuel from the pump in the fuel tank is pressurized by the HP fuel pumps and supplied to the fuel injectors via the fuel rails and crossover tube. The ECM controls the fuel injectors and HP fuel pumps to inject the required volume of fuel into the combustion chambers.

LOW AND HIGH PRESSURE FUEL LINES

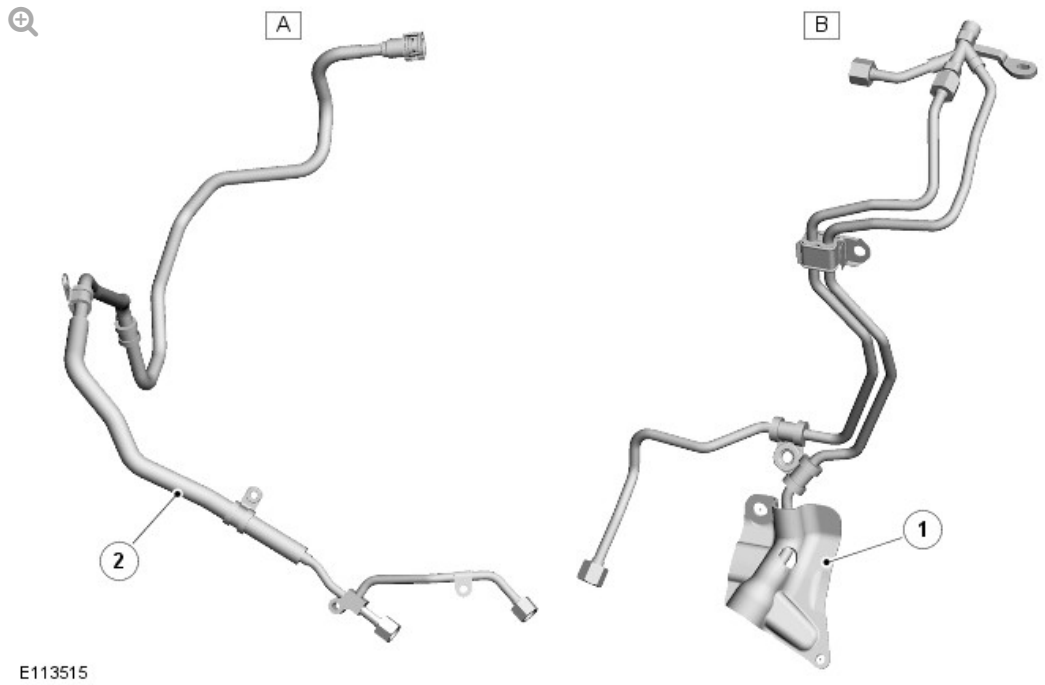

ITEM	DESCRIPTION
A	LP fuel lines
B	HP fuel lines
1	Acoustic cover
2	Heat reflective and insulation sleeves

The LP fuel line connects the HP fuel pumps to the fuel delivery line from the fuel tank and lines system. A quick release connector at the start of the LP fuel line is held in a clip integrated into the LH (left-hand) ignition coils cover. P-clips secure the LP fuel line to the rear of each cylinder head and to the RH (right-hand) side of the cylinder block. A heat reflective and insulation sleeves are installed on the LP fuel line where it runs behind the RH exhaust manifold.

The HP fuel lines connect the HP fuel pumps to the RH fuel rail and the crossover tube. Two P-clips and a pipe clamp attach the HP fuel lines to the cylinder block and the RH cylinder head respectively. An integral bracket on the front HP fuel line is attached to a stud on the front-upper RH timing cover. An acoustic cover is installed on the bottom of the front HP fuel line.

HIGH PRESSURE FUEL PUMPS

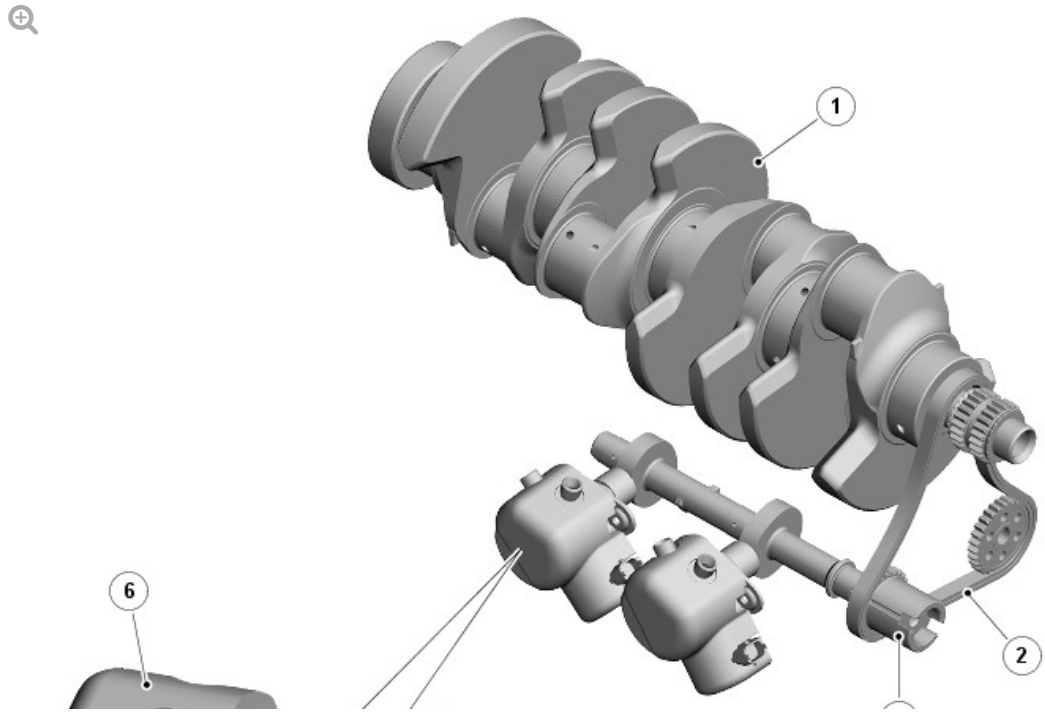

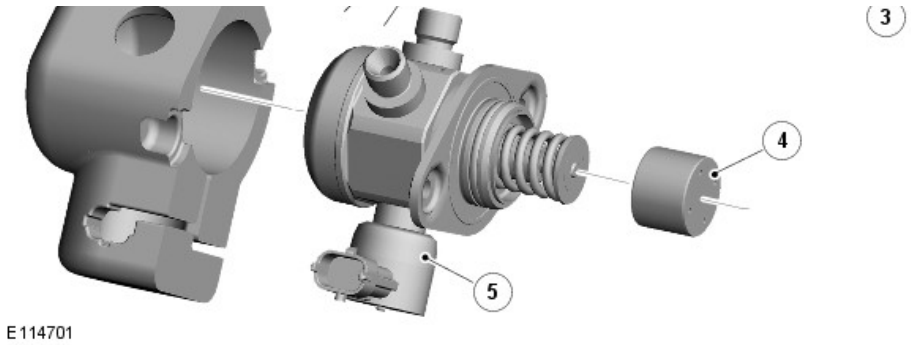

ITEM	DESCRIPTION
1	Crankshaft
2	Auxiliary drive chain
3	Auxiliary camshaft
4	Tappet
5	HP fuel pump - No.2
6	Acoustic cover

The two HP fuel pumps are identical mechanically-driven pumps installed on the RH side of the sump body, behind the generator. An O-ring seals each of the HP fuel pumps in the sump body. The front HP fuel pump is identified as No. 1 pump; the rear HP fuel pump is identified as No. 2 pump. An acoustic cover is installed on each of the HP fuel pumps.

The HP fuel pumps are single-plunger pumps. The plunger of each pump extends through the sump body and the carrier of the auxiliary camshaft. A tappet on the end each plunger is operated by a two-lobe cam on the auxiliary camshaft. A spring installed on the outside of the plunger ensures the plunger and tappet remain in contact with the cam.

The auxiliary camshaft is driven by the crankshaft, via the auxiliary drive chain, at engine speed. The auxiliary camshaft is timed to match the pump delivery strokes with crankshaft position.

HP Fuel Pump Schematic

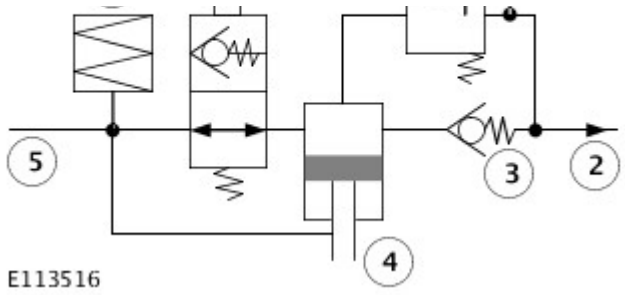

ITEM	DESCRIPTION
1	PRV (pressure relief valve)
2	To HP fuel lines
3	Check valve
4	Plunger
5	From LP fuel lines
6	Damper chamber
7	Fuel metering valve

In addition to the plunger, each HP fuel pump contains:

- A damper chamber.
- A fuel metering valve.
- A check valve.
- A PRV.

The damper absorbs pressure pulses from the plunger when the fuel metering valve is open at the start of the delivery stroke.

The fuel metering valve regulates the output pressure from the HP fuel pump. The fuel metering valve is a normally open solenoid valve controlled by the ECM. During the inlet stroke of the plunger the fuel metering valve is de-energized, which allows LP fuel into the pumping chamber. The ECM energizes the fuel metering valve closed during the delivery stroke of the plunger, which forces the fuel in the pumping chamber through the check valve into the HP lines. By changing the closing point of the fuel metering valve, the ECM can determine the volume of fuel output during the delivery stroke, and thus the pressure in the HP side of the system.

The check valve prevents the return of HP fuel to the pumping chamber during the inlet stroke of the plunger.

The PRV protects the HP side of the system from excessive pressure if there is a failure of the fuel metering valve. If the pump delivery pressure increases to 195 - 204 bar (2828 - 2959 lbf/in^2), the PRV opens and returns fuel to the inlet side of the plunger.

FUEL RAILS AND CROSSOVER TUBE

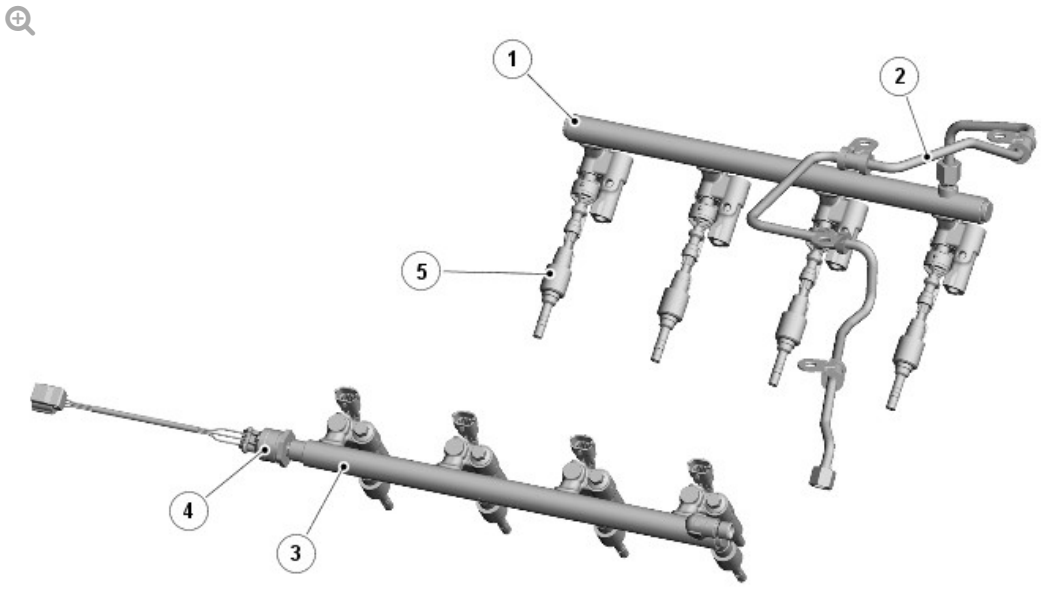

E113517

ITEM	DESCRIPTION
1	LH fuel rail
2	Crossover tube
3	RH fuel rail
4	FRP sensor
5	Fuel injector

The fuel rails and crossover tube are made from stainless steel. Bolts attach each fuel rail to the related cylinder head. The crossover tube connects the front high pressure line to the LH fuel rail, which ensures there is equal

pressure in the two fuel rails. Four P-clips attach the crossover tube to the intercooler-tank top.

The rear of the RH fuel rail incorporates a threaded boss for installation of the FRP sensor.

FUEL RAIL PRESSURE SENSOR

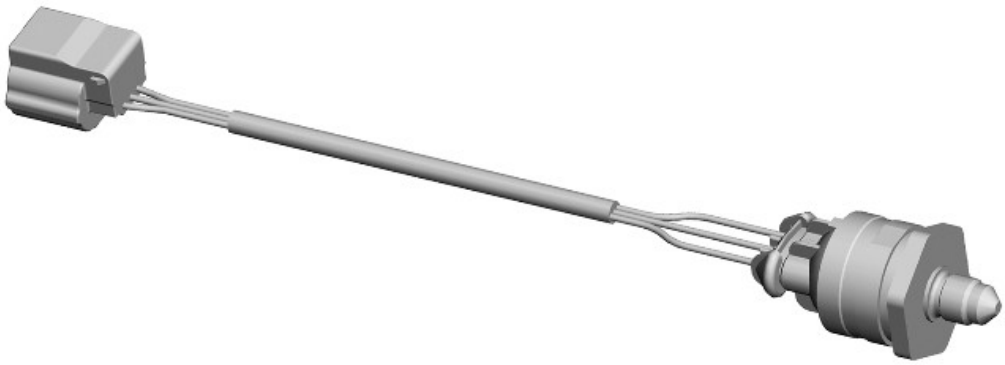

E113518

The FRP sensor provides the ECM with a continuous signal of fuel rail pressure. The FRP sensor is installed in the rear of the RH fuel rail. The FRP sensor is screwed into a threaded boss in the fuel rail. A flying lead and three pin connector provides the interface with the engine harness.

The FRP sensor contains a steel diaphragm fitted with strain gages, which are incorporated into a Wheatstone bridge. The output from the Wheatstone bridge is processed by the ECM to derive a pressure value.

FUEL INJECTORS

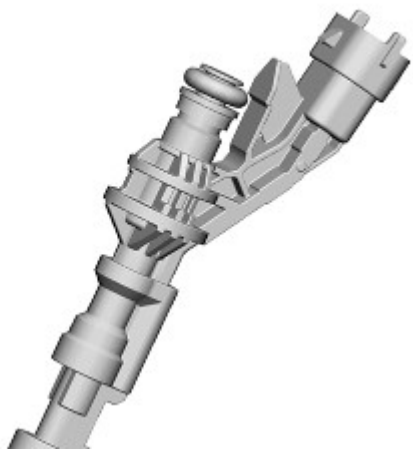

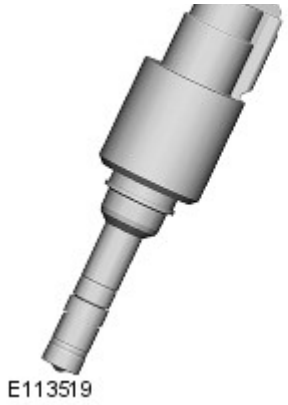

The fuel injectors spray fuel from the fuel rail directly into the combustion chambers. The fuel injectors are installed close to the center of the combustion chambers, between the inlet and exhaust valves and next to the spark plug.

The fuel injectors are a push fit in the fuel rails and the cylinder heads. On each fuel injector, a rubber O-ring seals the head of the fuel injector in the fuel rail. A teflon ring seals the nozzle of the fuel injector in the cylinder head. A clamp locks each fuel injector to the fuel rail.

Each fuel injector contains a solenoid-operated needle valve, which opens when the solenoid winding is energized. While the needle valve is open, fuel is sprayed into the combustion chamber. The solenoid winding is connected to a power feed and a ground from the ECM, which operates the fuel injectors with a two stage power supply. Initially the ECM supplies the fuel injectors with 65 V, then once the boost current reaches 11 A the power supply is switched to battery voltage. The ECM meters the amount of fuel injected into the combustion chambers by adjusting the time that the solenoid winding is energized.

There are six holes around the tip of the nozzle through which the fuel is sprayed. Two of the holes direct fuel below the spark plug. The other four holes direct fuel evenly around the remainder of the combustion chamber.

If a fuel injector fails, the engine will suffer from unstable idle speed, poor NVH (noise, vibration and harshness) and poor emissions performance.

CONTROL DIAGRAM

NOTE:

NOTE:

A = Hardwired

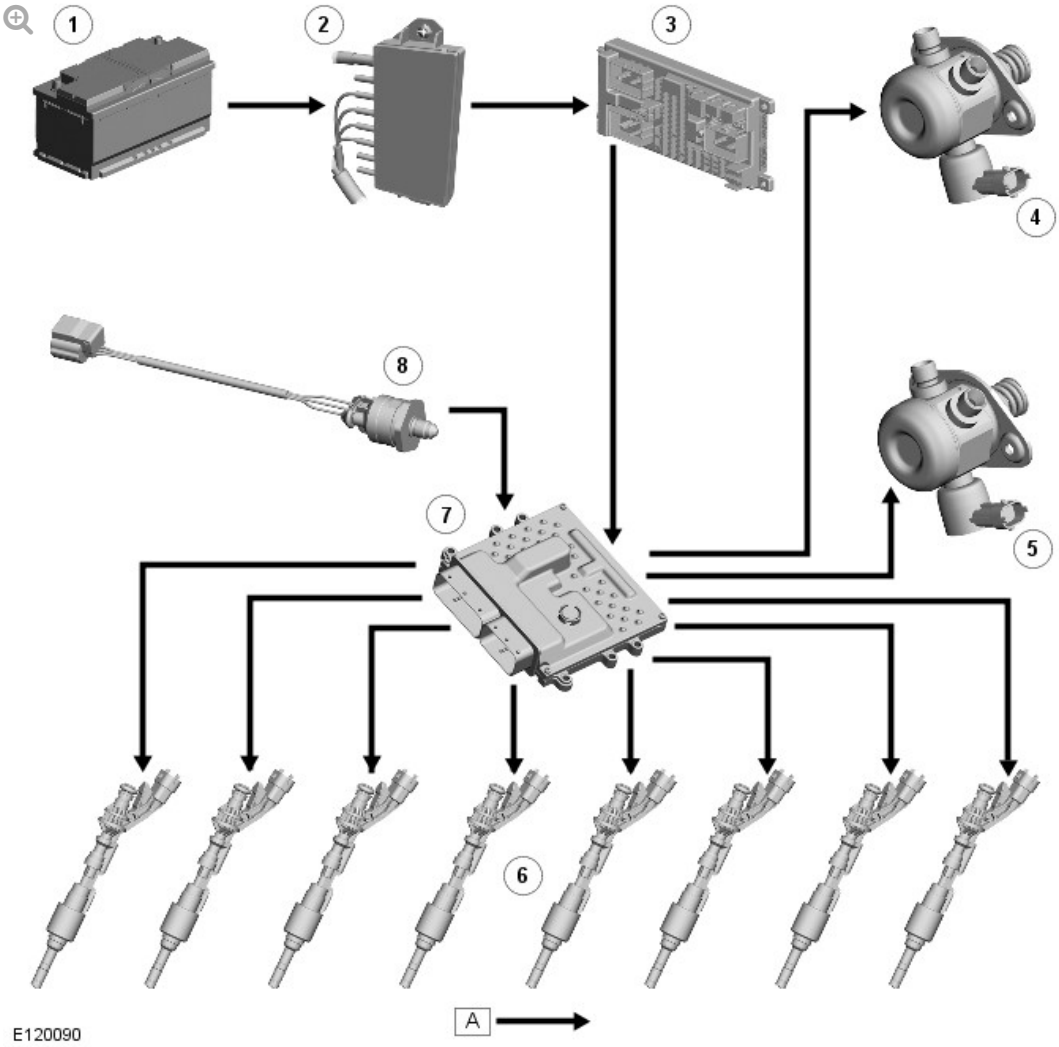

ITEM	DESCRIPTION
1	Battery
2	BJB (battery junction box) (50 A megafuse)
3	CJB (central junction box) (ignition relay)
4	No. 1 HP fuel pump
5	No. 2 HP fuel pump
6	Fuel injectors
7	ECM
8	FRP sensor

PRINCIPLES OF OPERATION

The ECM controls the output from the HP fuel pumps to deliver the required volume of fuel at pressures up to 150 bar (2175 lbf/in^2).

The ECM uses the signal from the FRP sensor to calculate the time the fuel injectors need to be energized to deliver the correct mass of fuel to the combustion chambers.

2012.0 RANGE ROVER (LM), 303-04

FUEL CHARGING AND CONTROLS – V8 S/C 5.0L PETROL

FUEL INJECTION COMPONENT CLEANING (G1202495)

GENERAL PROCEDURES

19.50.02	FUEL SYSTEM – DEPRESSURISE	5000 CC, AJ V8	0.1	USED WITHINS	+
19.50.02	FUEL SYSTEM – DEPRESSURISE	AJ V8, SUPERCHARGED	0.3	USED WITHINS	+
19.50.22	FUEL INJECTION COMPONENT CLEANING USING A VACUUM	5000 CC, AJ V8	0.1	USED WITHINS	+

GUN

GENERAL EQUIPMENT

EQUIPMENT NAME
Pneumatic vacuum gun

CLEANING

WARNINGS:

- Do not carry out any repairs to the fuel system with the engine running. Failure to follow this instruction may result in personal injury.
- Do not smoke or carry lighted tobacco or open flame of any type when working on or near any fuel related components. Highly flammable vapors are always present and may ignite. Failure to follow these instructions may result in personal injury.
- If fuel contacts the eyes, flush the eyes with cold water or eyewash solution and seek immediate medical attention.
- Place the vehicle in a well ventilated, quarantined area and arrange ' No Smoking/Petrol Fumes' signs about the vehicle.
- Wash hands thoroughly after fuel handling, as prolonged contact may cause irritation. Should irritation develop, seek medical attention.
- Do not carry or operate cellular phones when working on or near any fuel related components. Highly flammable vapors are always present and may ignite. Failure to follow these instructions may result in personal injury.

CAUTIONS:

- Before using the cleaning fluid, protect all electrical components and connectors with lint-free non-flocking material.
- Make sure that all parts removed from the vehicle are placed on the

Make sure that all parts removed from the vehicle are placed on the lint-free non-flocking material.

- Make sure that any protective clothing worn is clean and made from lint-free non-flocking material.
- Make sure that clean non-plated tools are used. Clean tools using a new brush that will not lose its bristles, prior to starting work on the vehicle.
- Use a steel topped workbench and cover it with clean, lint-free non-flocking material.
- Make sure the workshop area in which the vehicle is being worked on is as clean and as dust free as possible. Foreign matter from work on clutches, brakes or from machining or welding operations can contaminate the fuel system and may result in later malfunction.

1. Using a new brush that will not lose its bristles, brush the components being removed and the surrounding area.

2. Using a pneumatic vacuum gun, remove all traces of foreign material.
   General Equipment: Pneumatic vacuum gun

FUEL CHARGING AND CONTROLS – V8 S/C 5.0L PETROL

FUEL INJECTORS (G1225236)

REMOVAL AND INSTALLATION

19.60.12	INJECTORS – SET – RENEW	5000 CC, AJ V8, SUPERCHARGED	5	USED WITHINS	+
19.60.12	INJECTORS – SET – RENEW	AJ V8, SUPERCHARGED	5.1	USED WITHINS	+

REMOVAL

1. Refer to: Fuel Rail LH (303-04, Removal and Installation).

INSTALLATION

1. Refer to: Fuel Rail LH (303-04, Removal and Installation).

2012.0 RANGE ROVER (LM), 303-04

FUEL CHARGING AND CONTROLS – V8 S/C 5.0L PETROL

FUEL RAIL LH (G1224858)

19.60.03	FUEL RAIL - LH BANK - RENEW	5000 CC, AJ V8, SUPERCHARGED	1.4	USED WITHINS	+

SPECIAL TOOL(S)

303-1450

Spark Plug Remover/Installer

310-197

Remover, Fuel Injector

310-198

Installer, Teflon Seal

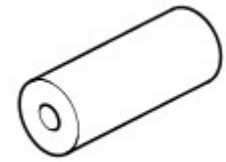

310-199

Re-shape Tool, Teflon Seal

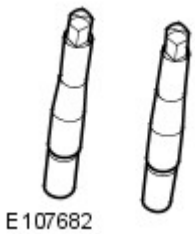

310-200-01

Fuel Rail Installation Guide Pins - Threaded

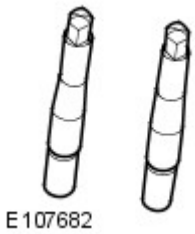

310-200-02

Fuel Rail Installation Guide Pins - Unthreaded

REMOVAL

CAUTIONS:

- Make sure that tools and equipment are clean and free of foreign material and lubricant.
- Always carry out the cleaning process before carrying out any repairs to the fuel injection system components. Failure to follow

this instruction may result in foreign matter ingress to the fuel injection system.

NOTES:

- Removal steps in this procedure may contain installation details.
- Some variation in the illustrations may occur, but the essential information is always correct.

1. Refer to: Petrol and Petrol-Ethanol Fuel Systems Health and Safety Precautions (100-00 General Information, Description and Operation).

2. Refer to: Fuel System Pressure Release - V8 5.0L Petrol/V8 S/C 5.0L Petrol (310-00 Fuel System - General Information, General Procedures).

3. Disconnect the battery ground cable.
   Refer to: Specifications (414-00 Battery and Charging System - General Information, Specifications).

4. Refer to: Fuel Injection Component Cleaning (303-04D Fuel Charging and Controls - V8 5.0L Petrol, General Procedures).

5. Refer to: Air Cleaner Outlet Pipe T-Connector (303-12D Intake Air Distribution and Filtering - V8 S/C 5.0L Petrol, Removal and Installation).

6. **CAUTION:**

   Be prepared to collect escaping fluids.

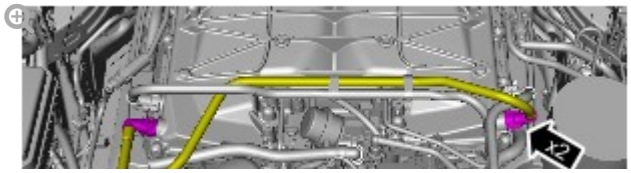

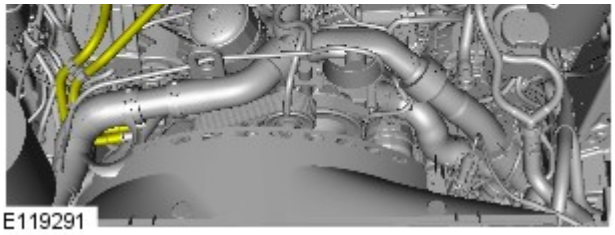

7. **CAUTION:**

Be prepared to collect escaping fluids.

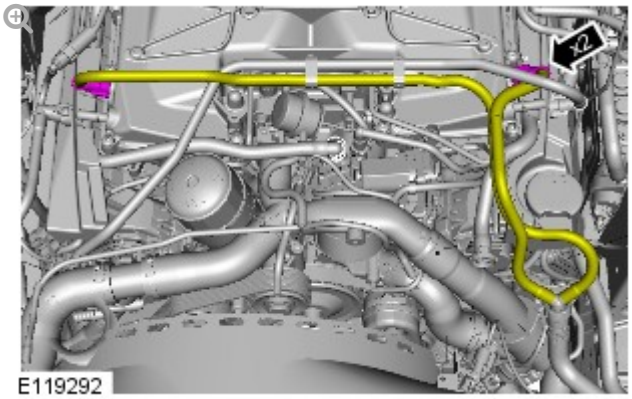

8. **CAUTION:**

Be prepared to collect escaping fluids.

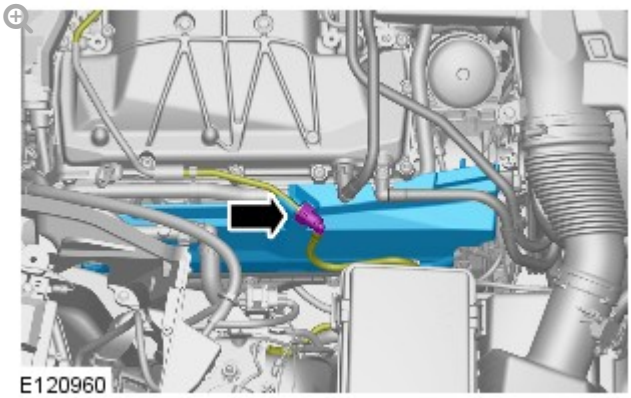

9. **CAUTION:**

Be prepared to collect escaping fluids.

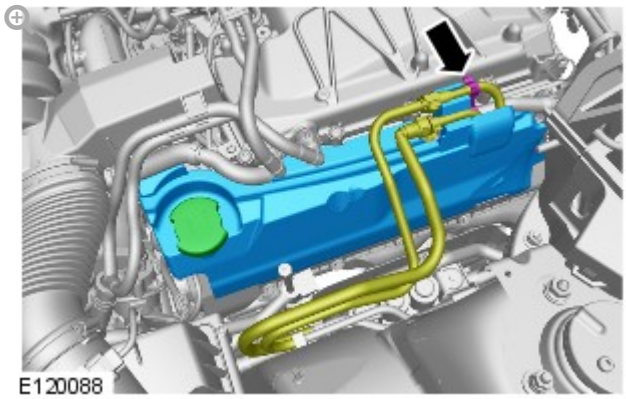

10.

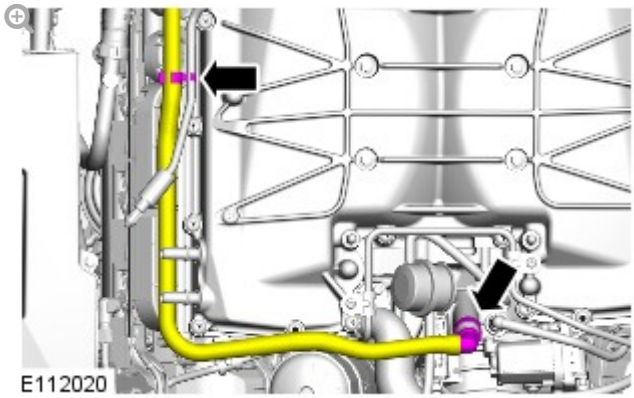

11.

CAUTIONS:

- Make sure that all openings are sealed. Use new blanking caps.
- Be prepared to collect escaping fluids.

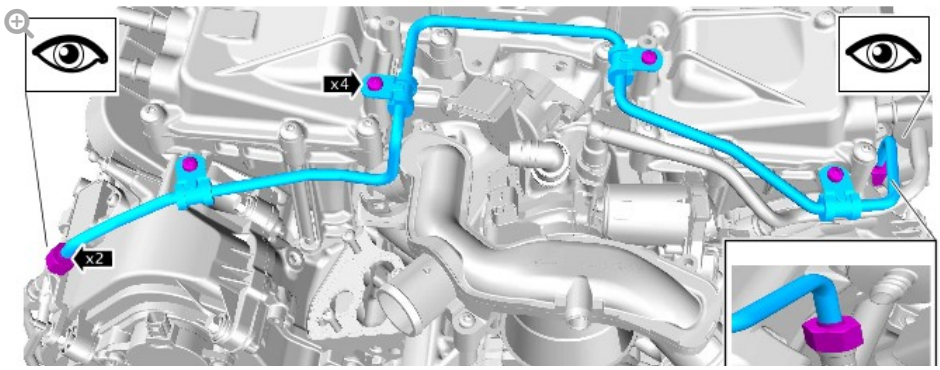

12.

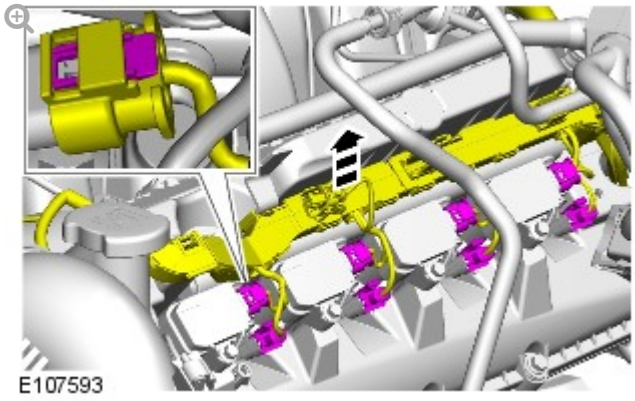

13.

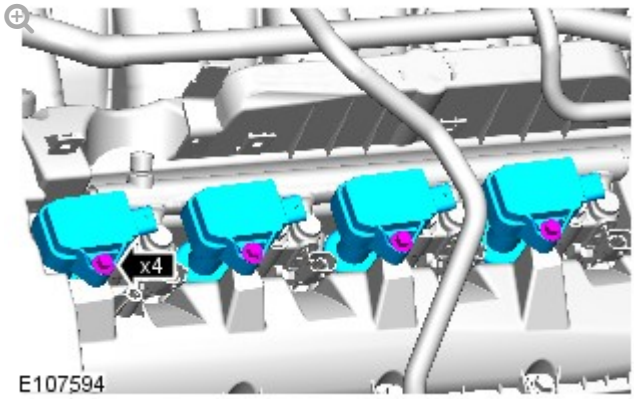

14.

NOTE:

RH illustration shown, LH is similar.

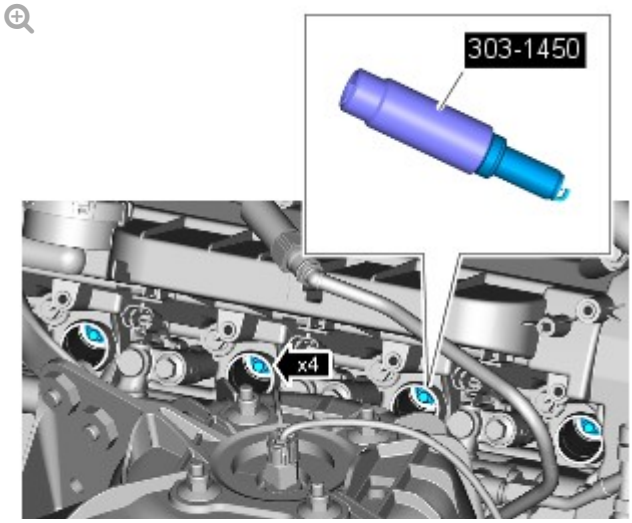

Special Tool(s): 303-1450

15.

CAUTION:

Make a note of the fuel injector clamp alignment to the fuel rail prior to removal.

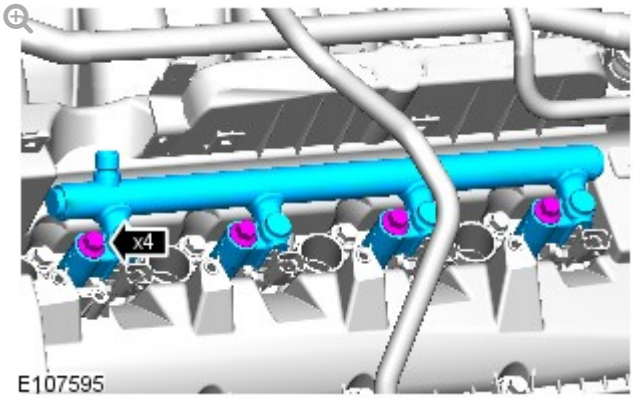

16.

CAUTIONS:

- Make sure that the special tool is located correctly to the fuel injector prior to removing the fuel injector.
- Make sure that the special tool is held square to the fuel injector during removal.
- Make sure that all open ports are covered to prevent any foreign material ingress.

NOTE:

RH illustration shown, LH is similar.

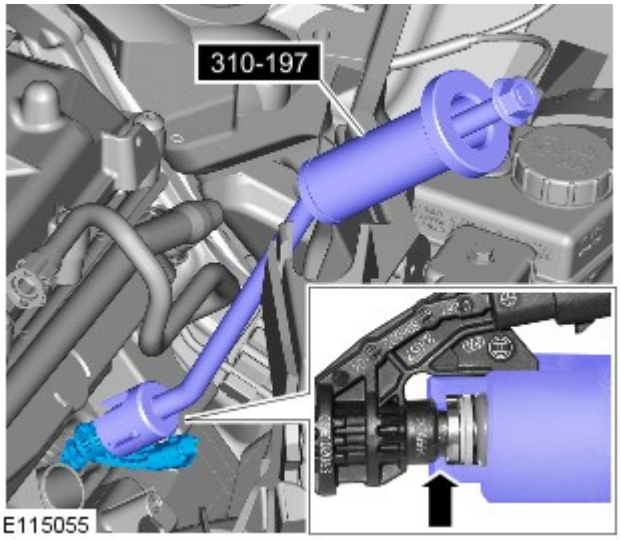

Special Tool(s): 310-197

17.

CAUTIONS:

- If new fuel injectors are installed, a new injector clamp must be installed.
- If the fuel injector is being removed without a new component being installed, the fuel injector clamp must remain with the fuel injector it is removed with.

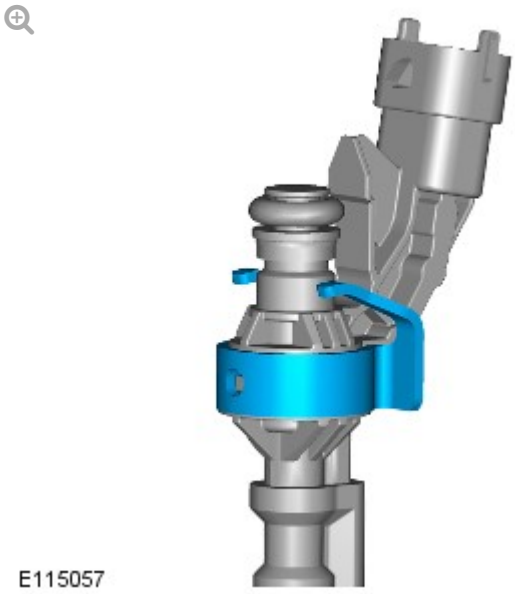

18.

CAUTIONS:

- Do not use a knife to remove the Teflon seal as damage could occur to the fuel injector.
- Do not cut the Teflon seal to deep as damage could occur to the fuel injector.
- Pinch the Teflon seal to allow the tool to cut the Teflon seal without damaging the fuel injector.

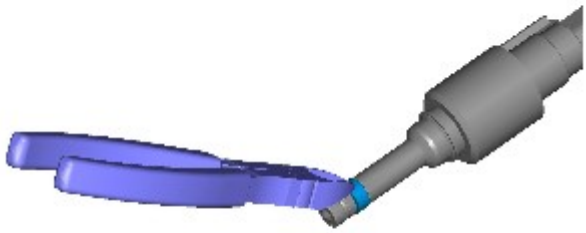

E115058

19. **CAUTION:**

Do not use any sharp tools to remove the O-ring seal as damage could occur to the fuel injector.

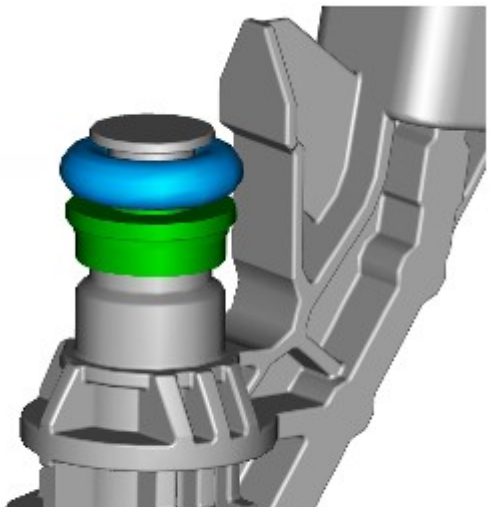

E115059

INSTALLATION

1.

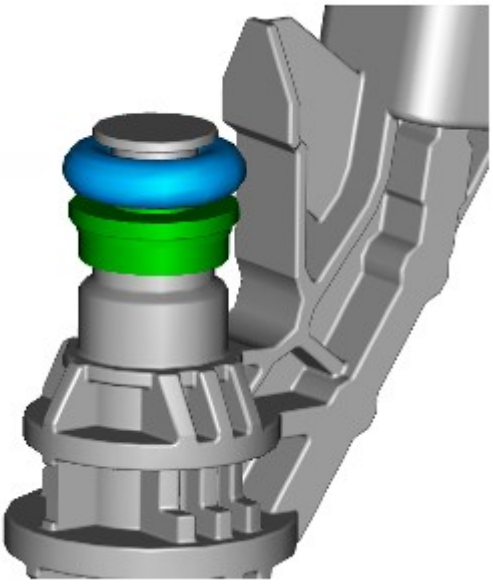

E115059

Install new O-ring seals.

2.

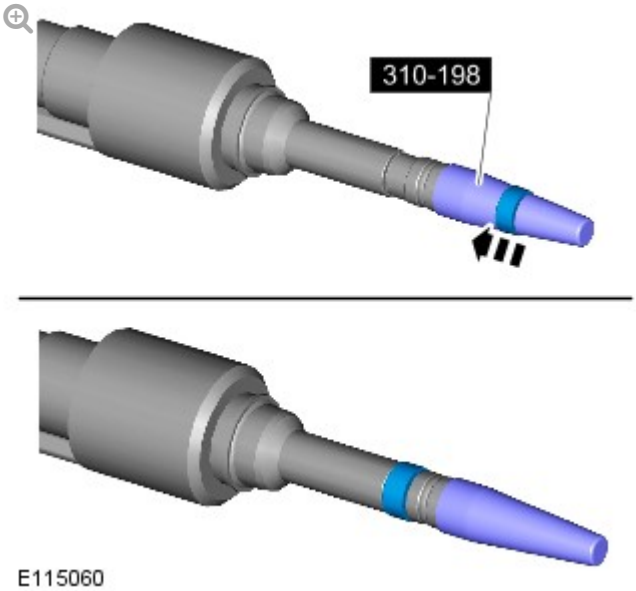

E115060

Install new Teflon seals.

Special Tool(s): 310-198

3.

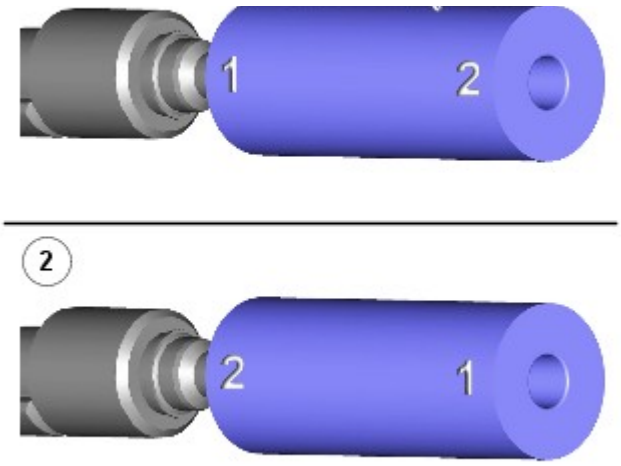

E115062

Special Tool(s): 310-199

4. **CAUTION:**

> If the original fuel injector is being installed, the original fuel injector clamp must installed with the fuel injector it was removed with.

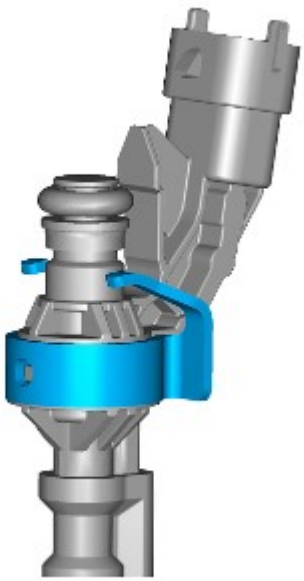

E115057

5. **CAUTION:**

> If a new cylinder head has been installed then the special tool 310-200-02 without the thread must be used to install the fuel rail.

fuel rail.

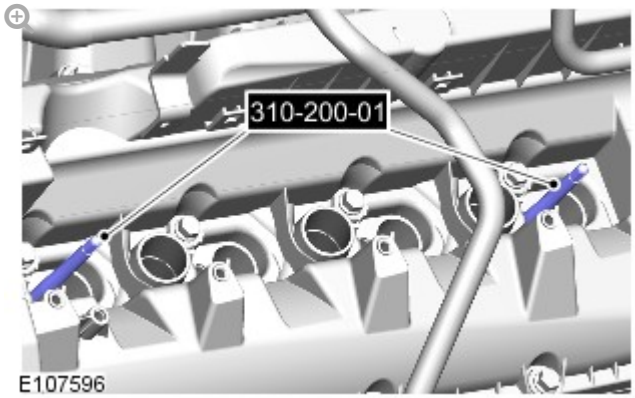

Special Tool(s): 310-200-01, 310-200-02

6. **CAUTIONS:**

- Make sure that the area around the open fuel injector ports are clean and free of foreign material and lubricant prior to installing the fuel injector.
- When installing the fuel injector(s), make sure that the Teflon seal is clean and free of foreign material and lubricant.

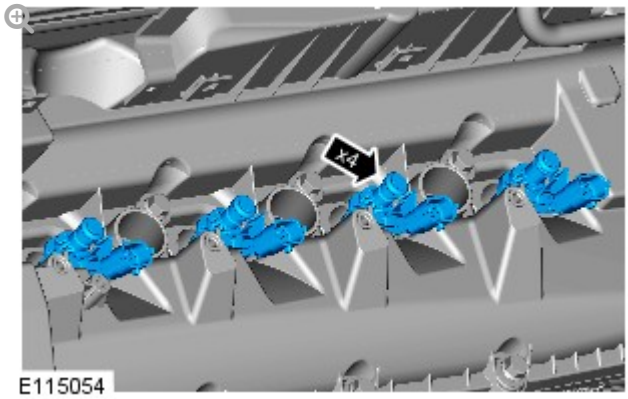

7. **CAUTIONS:**

- If new fuel injectors are installed, a new injector clamp must be installed.

- Make sure that the fuel injector is aligned and installed into the fuel rail correctly, as noted in the removal step.
- Tighten the fuel rail retaining bolts a turn at a time until the correct torque is achieved.

NOTE:

Lubricate the fuel injector O-ring seals with clean engine oil.

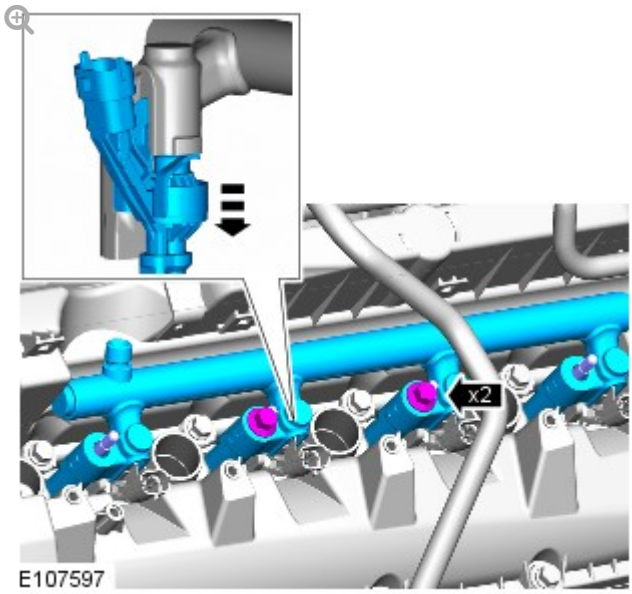

Torque: **20 Nm**

8.

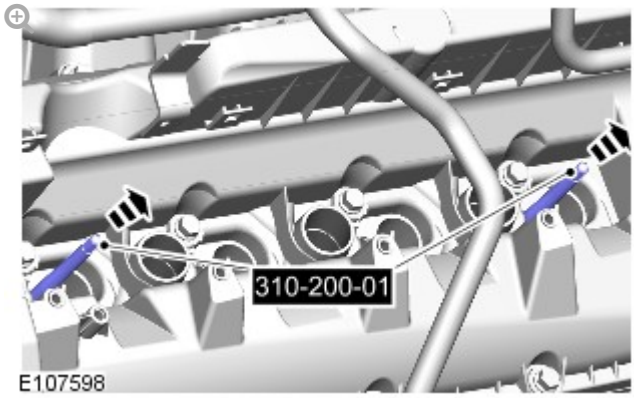

Special Tool(s): 310-200-01, 310-200-02

9.

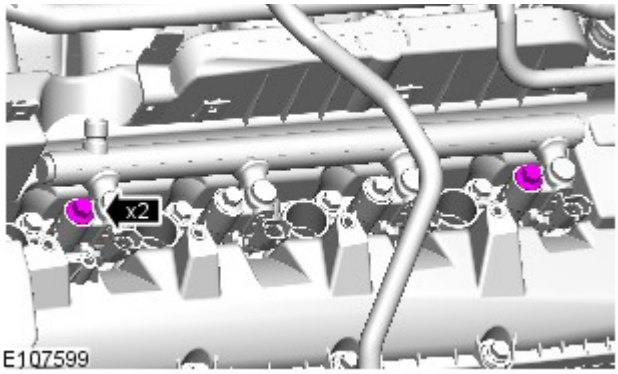

Torque: **20 Nm**

10. **NOTE:**

Tighten the bolts in the indicated sequence.

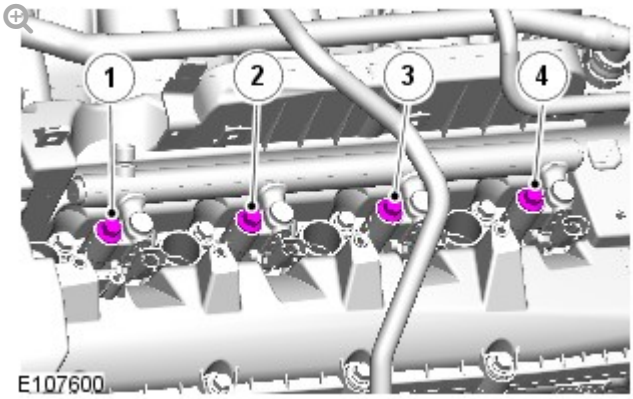

Torque:

Bolt 2 **30 Nm**

Bolt 3 **30 Nm**

Bolt 1 **30 Nm**

Bolt 4 **30 Nm**

11. **NOTE:**

RH illustration shown, LH is similar.

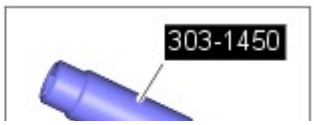

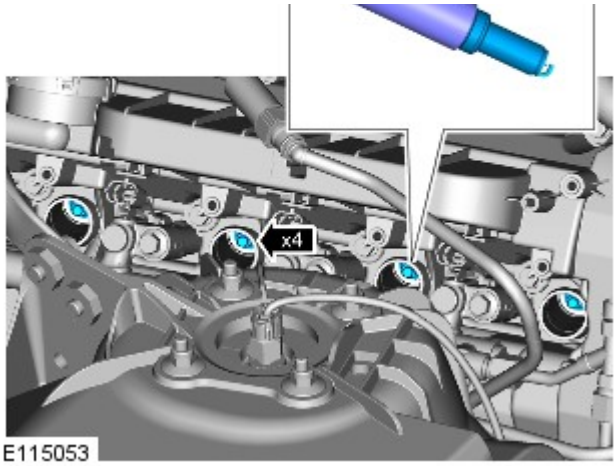

Special Tool(s): 303-1450

Torque: **20 Nm**

12.

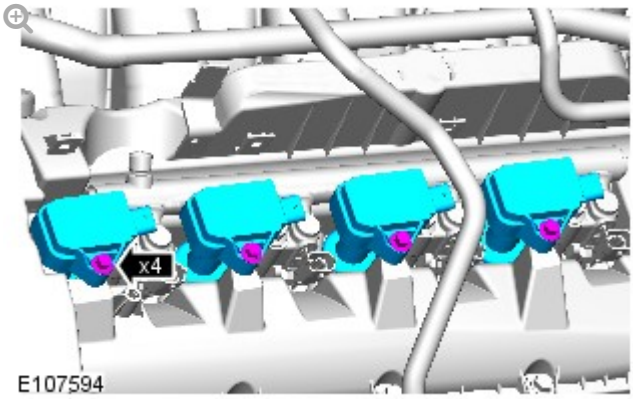

Torque: **7 Nm**

13.

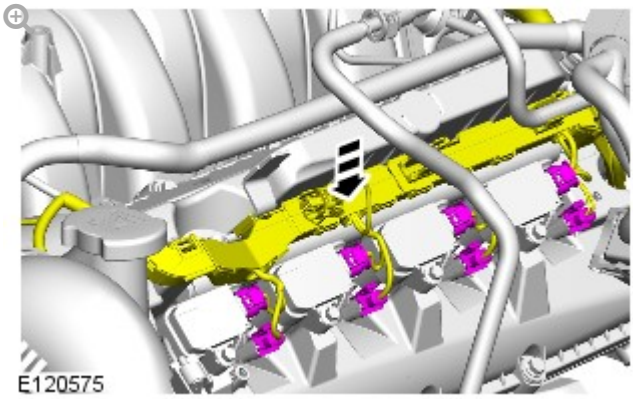

14.

CAUTION:

Lubricate only the union threads with clean engine oil.

NOTES:

- Do not tighten at this stage.
- Remove and discard the blanking caps.

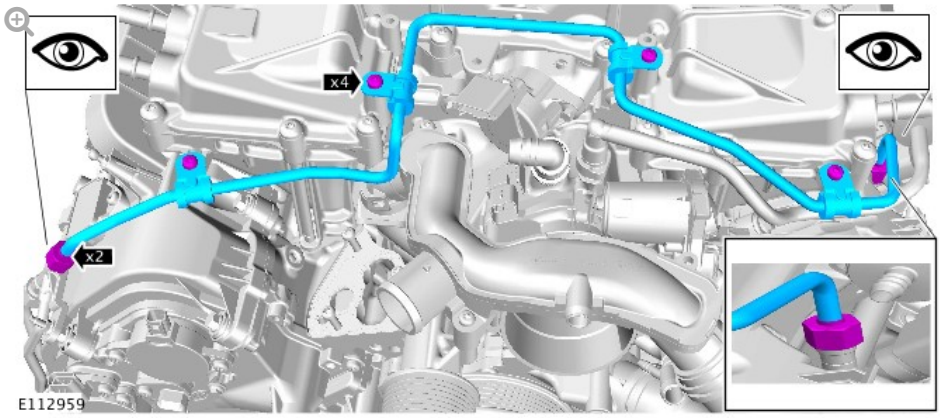

15.

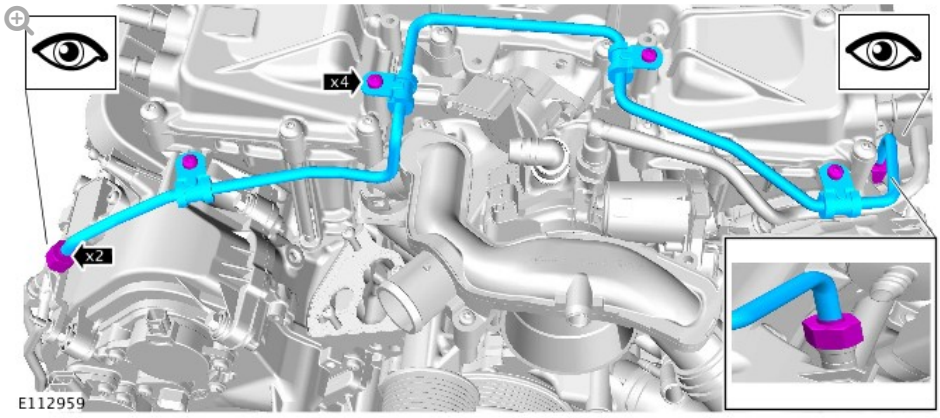

Torque:

Unions **21 Nm**

Bolts **8 Nm**

16.

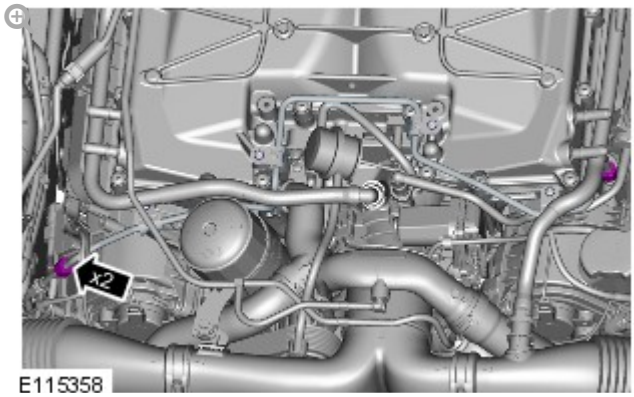

Torque: **21 Nm**

17.

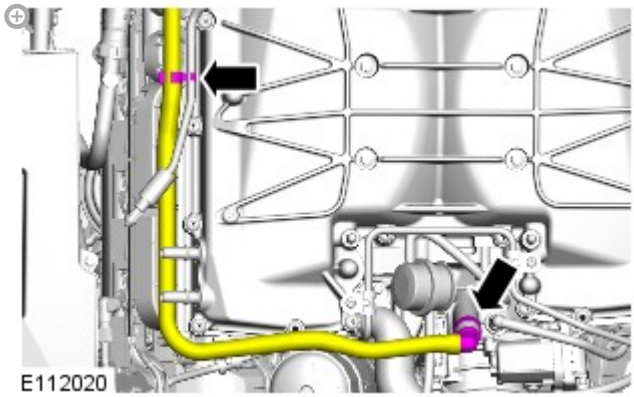

18.

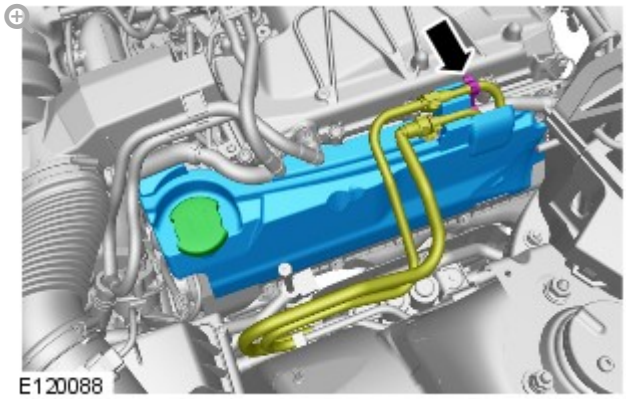

19.

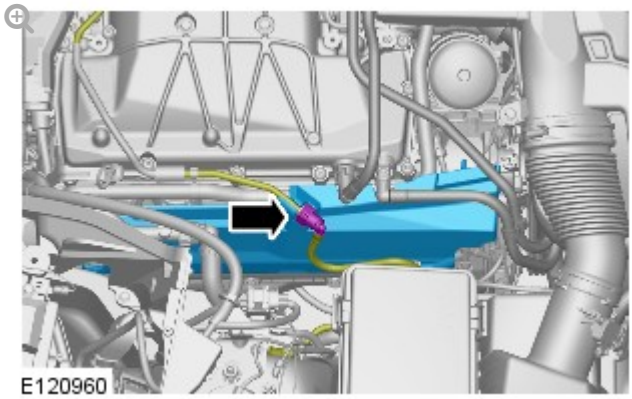

20.

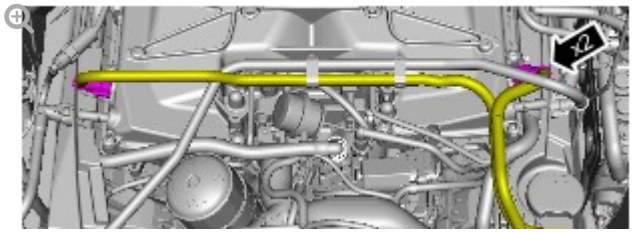

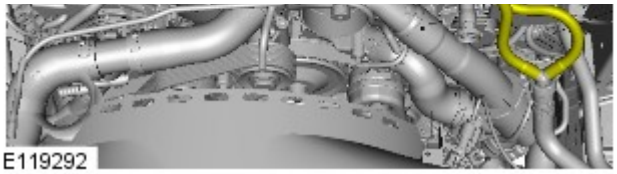

21.

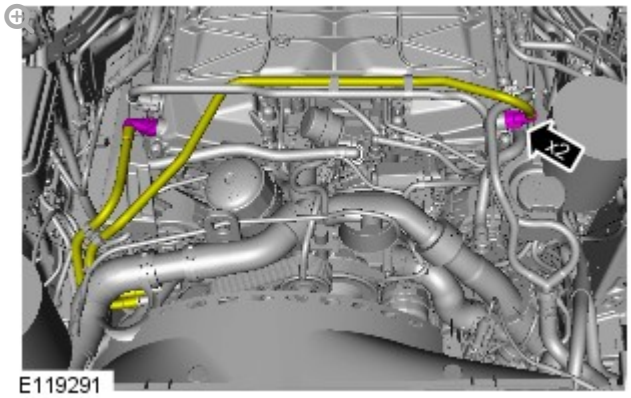

22. Refer to: Air Cleaner Outlet Pipe T-Connector (303-12D Intake Air Distribution and Filtering - V8 S/C 5.0L Petrol, Removal and Installation).

23. Refer to: Specifications (414-00 Battery and Charging System - General Information, Specifications).

2012.0 RANGE ROVER (LM), 303-04

FUEL CHARGING AND CONTROLS – V8 S/C 5.0L PETROL

FUEL RAIL RH (G1224859)

REMOVAL AND INSTALLATION

19.60.05	FUEL RAIL – RH BANK – RENEW	5000 CC, AJ V8, SUPERCHARGED	4	USED WITHINS	+

SPECIAL TOOL(S)

310-197

Remover, Fuel Injector

310-198

Installer, Teflon Seal

310-199

Re-shape Tool, Teflon Seal

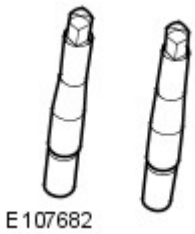

310-200-01

Fuel Rail Installation Guide Pins - Threaded

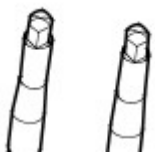

310-200-02

Fuel Rail Installation

E107682	Guide Pins - Unthreaded

REMOVAL

CAUTIONS:

- Make sure that tools and equipment are clean and free of foreign material and lubricant.
- Always carry out the cleaning process before carrying out any repairs to the fuel injection system components. Failure to follow this instruction may result in foreign matter ingress to the fuel injection system.

NOTES:

- Removal steps in this procedure may contain installation details.
- Some variation in the illustrations may occur, but the essential information is always correct.

1. Refer to: Petrol and Petrol-Ethanol Fuel Systems Health and Safety Precautions (100-00 General Information, Description and Operation).

2. Refer to: Fuel System Pressure Release - V8 5.0L Petrol/V8 S/C 5.0L Petrol (310-00 Fuel System - General Information, General Procedures).

3. Disconnect the battery ground cable.
   Refer to: Specifications (414-00 Battery and Charging System -

General Information, Specifications).

4. Refer to: Fuel Injection Component Cleaning (303-04D Fuel Charging and Controls - V8 5.0L Petrol, General Procedures).

5. Refer to: Air Cleaner Outlet Pipe T-Connector (303-12D Intake Air Distribution and Filtering - V8 S/C 5.0L Petrol, Removal and Installation).

6.

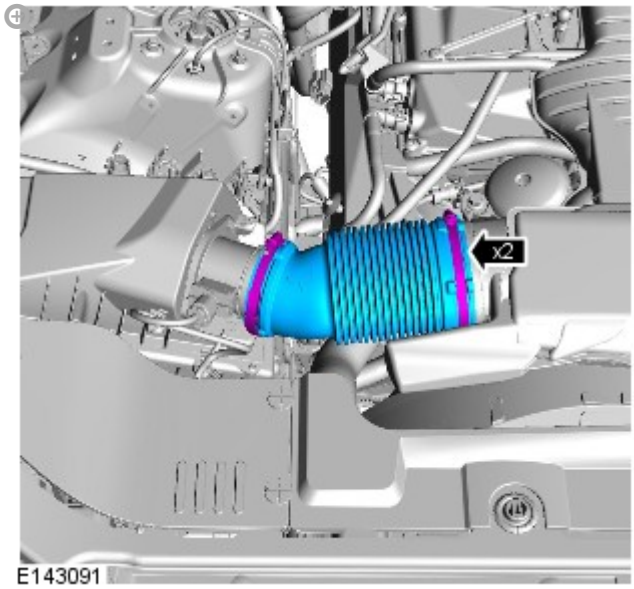

E143091

7. Refer to: Air Cleaner RH (303-12C Intake Air Distribution and Filtering - V8 5.0L Petrol, Removal and Installation).

8. **CAUTION:**

> Be prepared to collect escaping coolant.

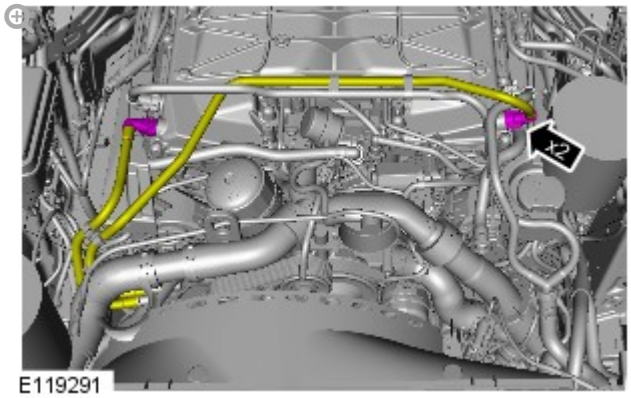

E119291

9.

CAUTION:

Be prepared to collect escaping coolant.

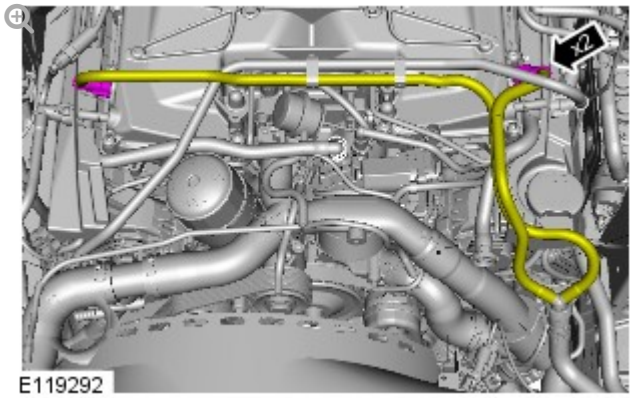

10.

CAUTION:

Be prepared to collect escaping fluids.

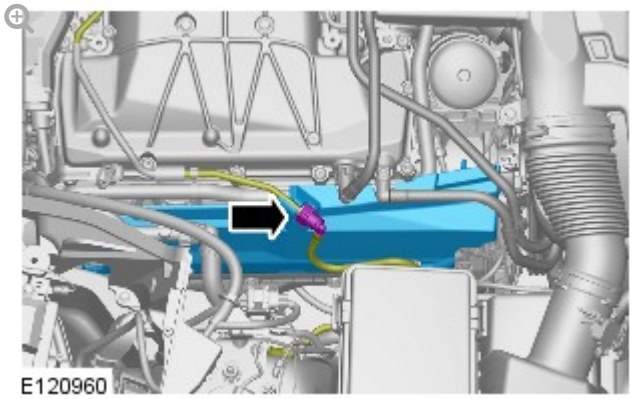

11.

CAUTION:

Be prepared to collect escaping fluids.

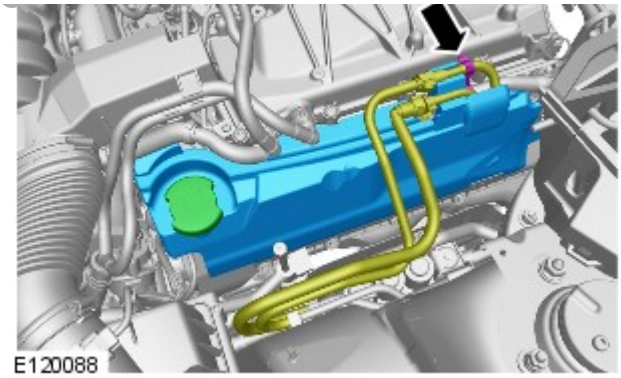

12.

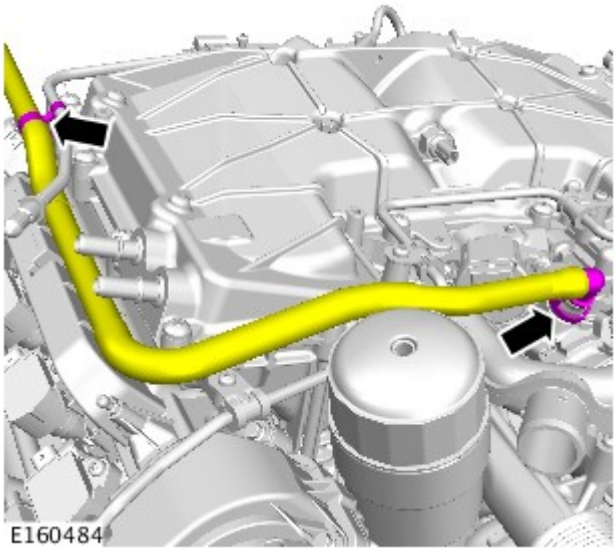

13.

CAUTIONS:

- Be prepared to collect escaping fluids.
- Make sure that all openings are sealed. Use new blanking caps.

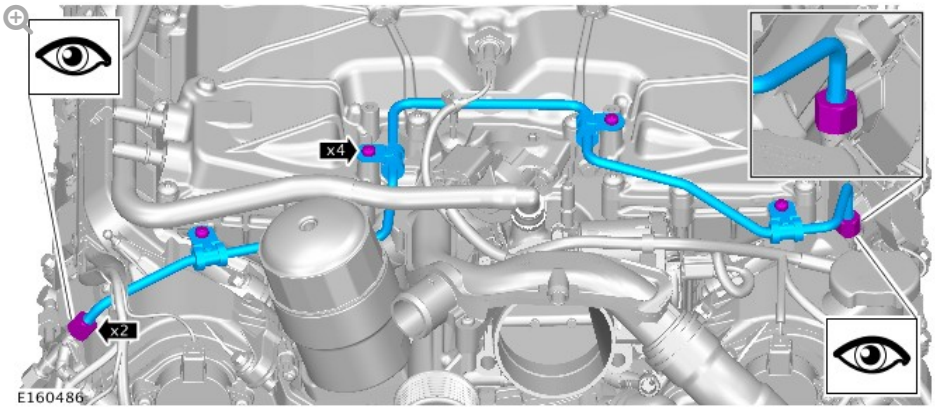

14.

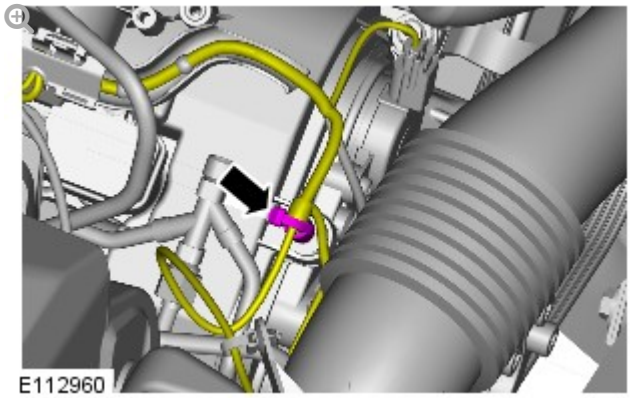

15.

CAUTIONS:

- Be prepared to collect escaping fluids.
- Make sure that all openings are sealed. Use new blanking caps.

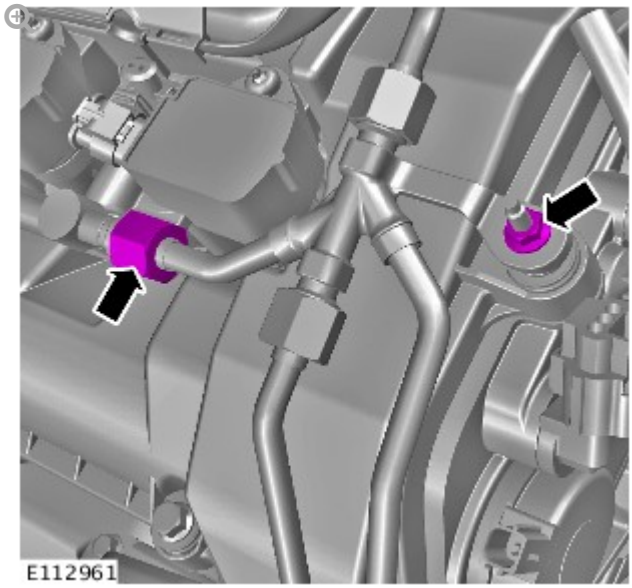

16.

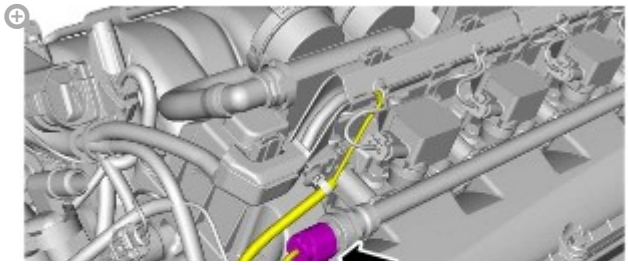

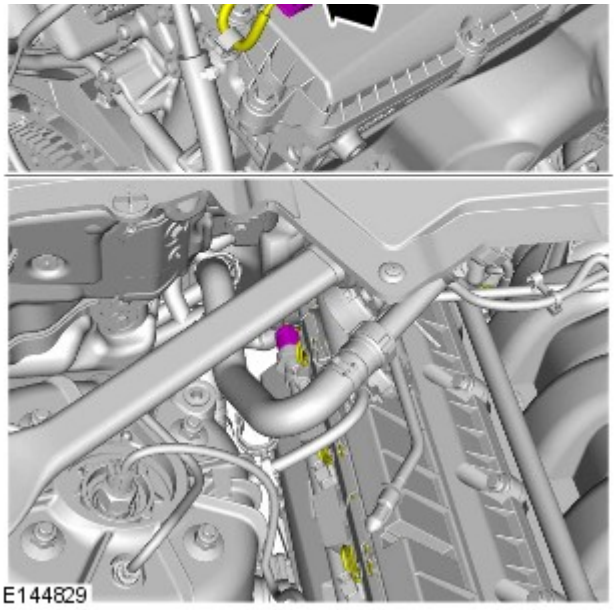

17.

NOTE:

If equipped.

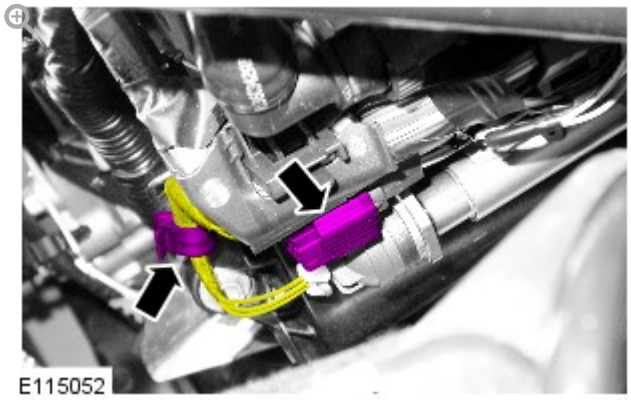

18.

NOTE:

LH illustration shown, RH is similar.

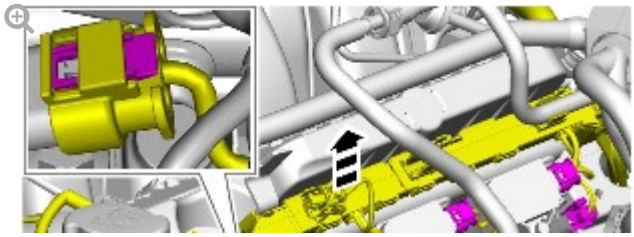

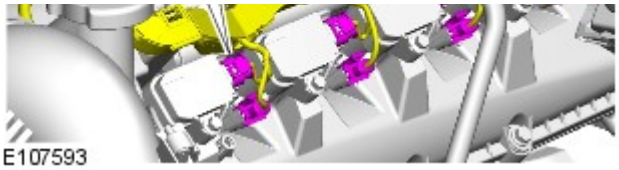

19.

NOTE:

LH illustration shown, RH is similar.

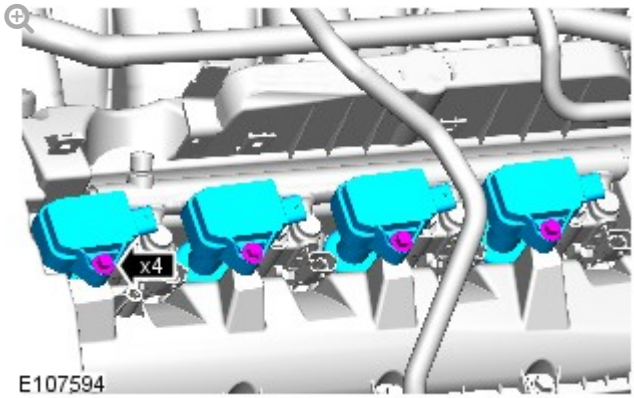

20.

CAUTION:

Make a note of the fuel injector clamp alignment to the fuel rail prior to removal.

NOTE:

LH illustration shown, RH is similar.

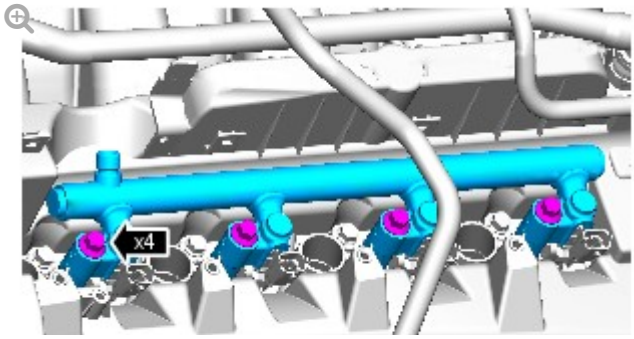

21. **NOTE:**

> This step is only required if a new fuel rail is installed.

Refer to: Fuel Rail Pressure (FRP) Sensor (303-14C Electronic Engine Controls - V8 5.0L Petrol, Removal and Installation).

22. **CAUTIONS:**

> - Make sure that the special tool is located correctly to the fuel injector prior to removing the fuel injector.
> - Make sure that the special tool is held square to the fuel injector during removal.
> - Make sure that all open ports are covered to prevent any foreign material ingress.

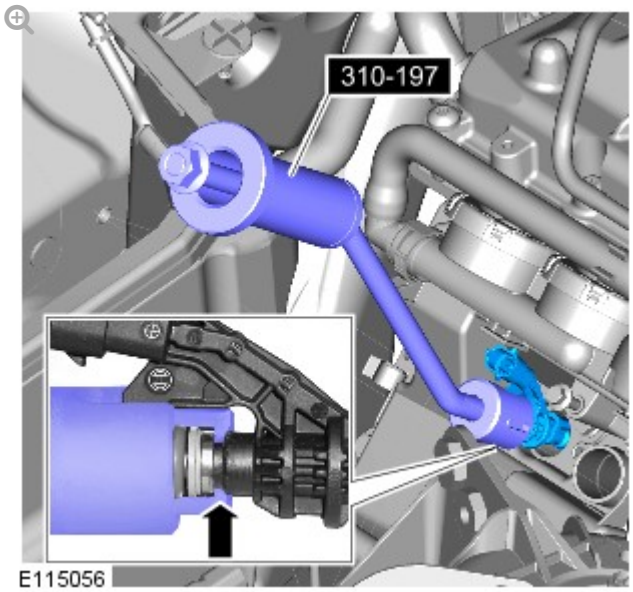

Special Tool(s): 310-197

23. **CAUTION:**

If the fuel injector is being removed without a new component being installed, the fuel injector clamp must remain with the fuel injector it is removed with.

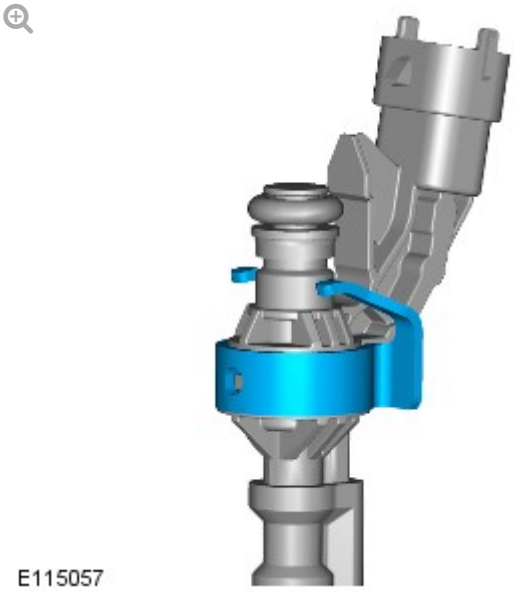

24. **CAUTIONS:**

- Do not use a knife to remove the Teflon seal as damage could occur to the fuel injector.
- Do not cut the Teflon seal to deep as damage could occur to the fuel injector.
- Pinch the Teflon seal to allow the tool to cut the Teflon seal without damaging the fuel injector.

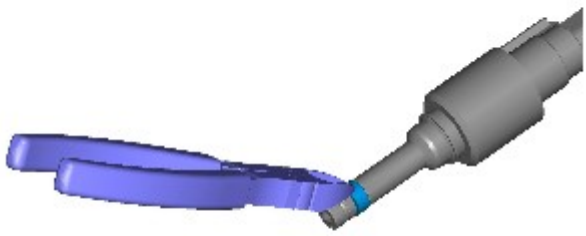

E115058

25.

CAUTION:

Do not use any sharp tools to remove the O-ring seal as damage could occur to the fuel injector.

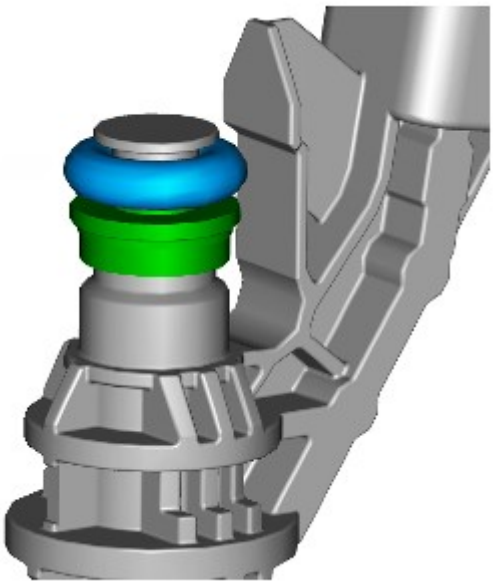

E115059

26.

WARNING:

Do not work on or under a vehicle supported only by a jack. Always support the vehicle on safety stands.

Raise and support the vehicle.

27.

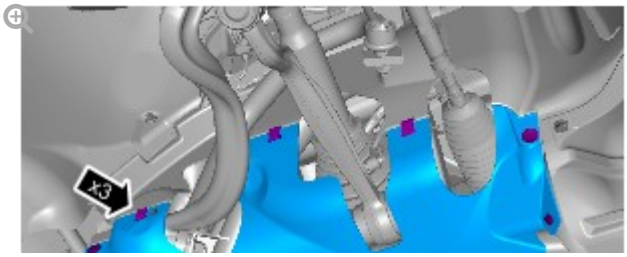

28.

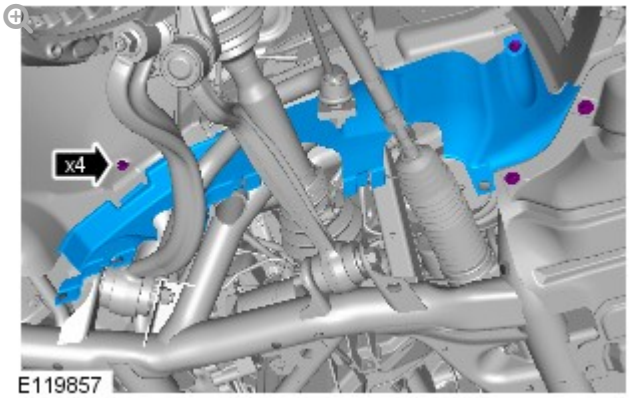

29. Refer to: Generator (414-02B Generator and Regulator - TDV8 4.4L Diesel, Removal and Installation).

30.

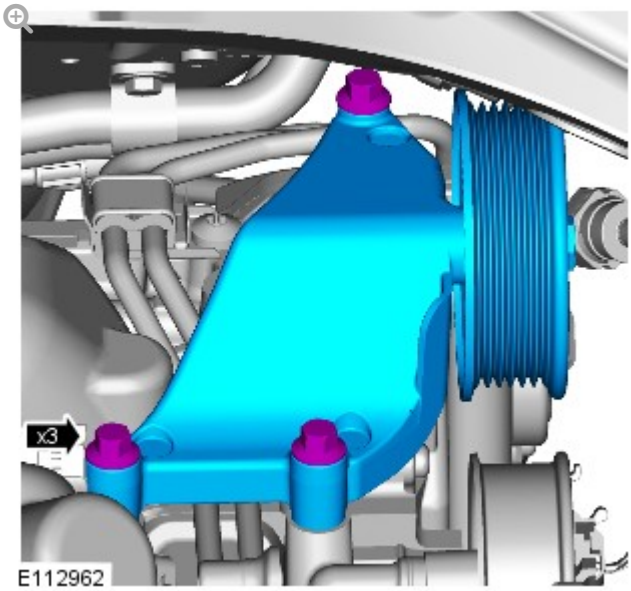

31.

NOTE:

Engine shown removed for clarity.

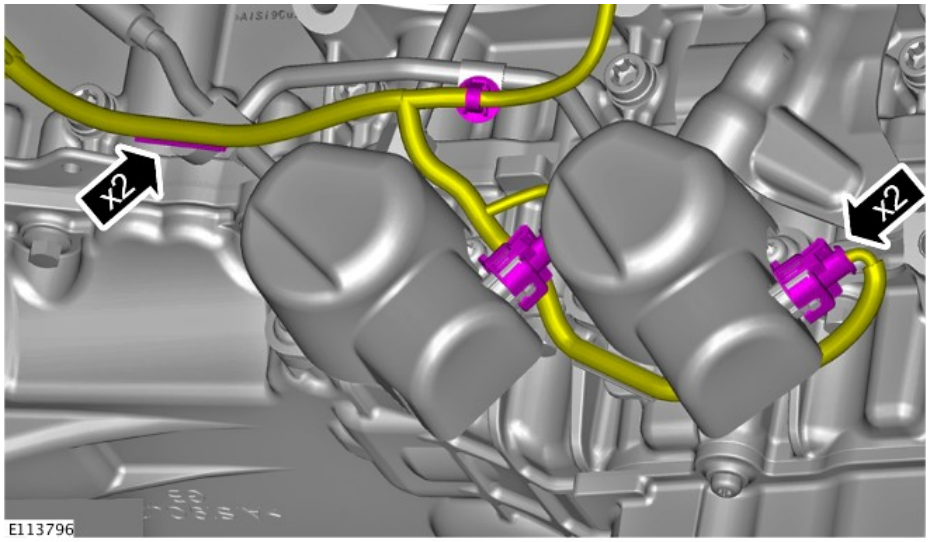

32.

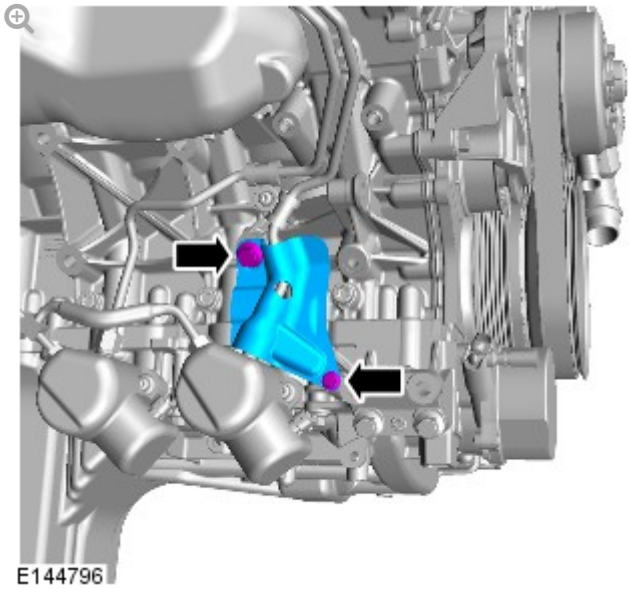

33.

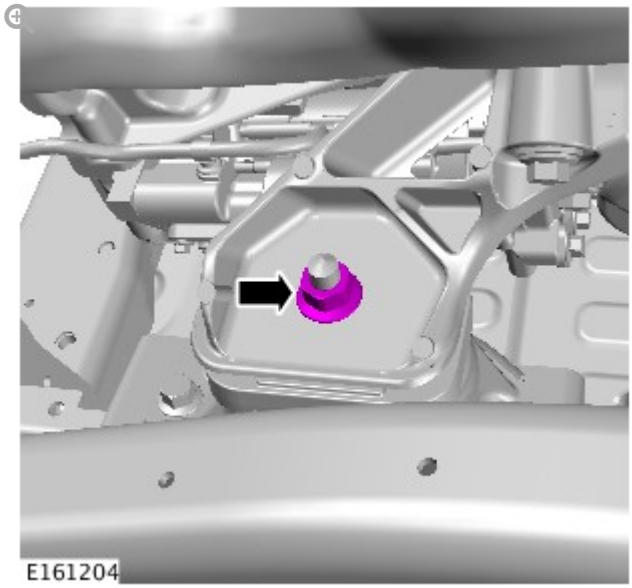

34.

CAUTION:

Use a wooden block to protect the oil pan when supporting the engine.

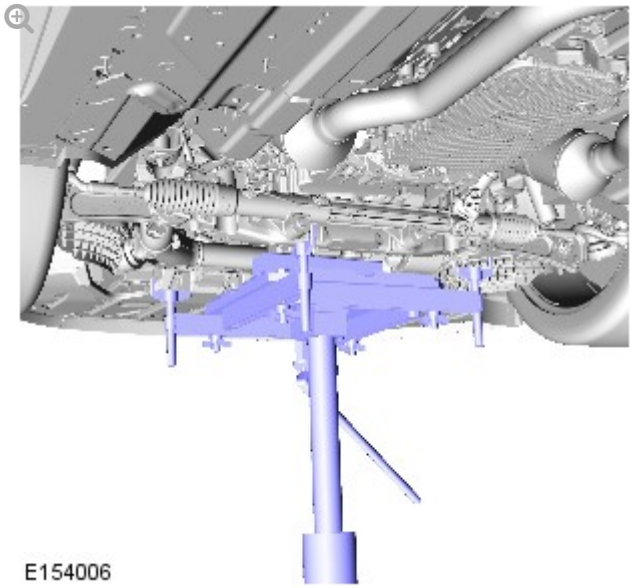

Using a suitable hydraulic jack, support the engine.

35.

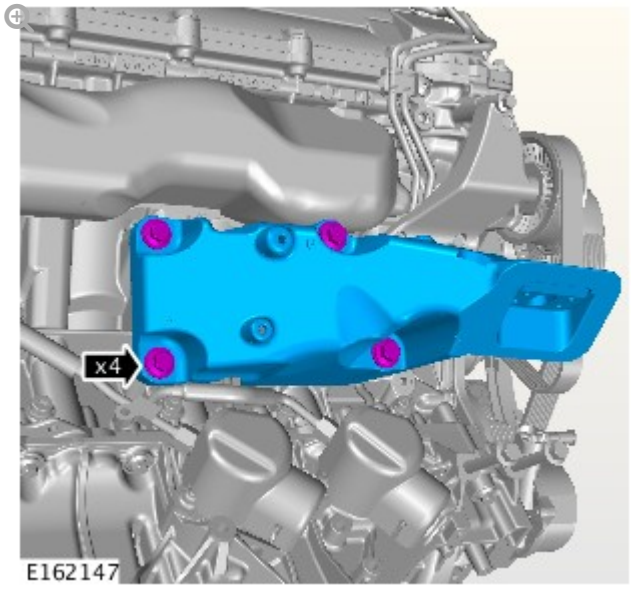

36.

WARNING:

Do not smoke or carry lighted tobacco or open flame of any

type when working on or near any fuel related components. Highly flammable vapors are always present and may ignite. Failure to follow these instructions may result in personal injury.

CAUTIONS:

- Remove and discard the high-pressure fuel supply lines.
- Be prepared to collect escaping fluids.
- Make sure that all openings are sealed. Use new blanking caps.

NOTE:

Engine shown removed for clarity.

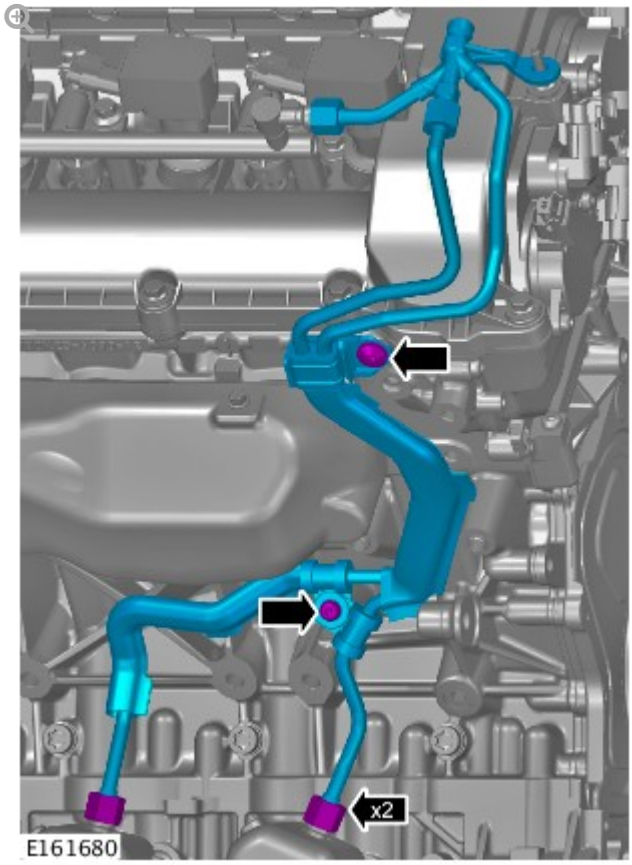

INSTALLATION

1.

CAUTION:

Lubricate only the union threads with clean engine oil.

NOTES:

- Engine shown removed for clarity.
- Install the bolts and unions finger tight before final tightening.
- Remove and discard the blanking caps.

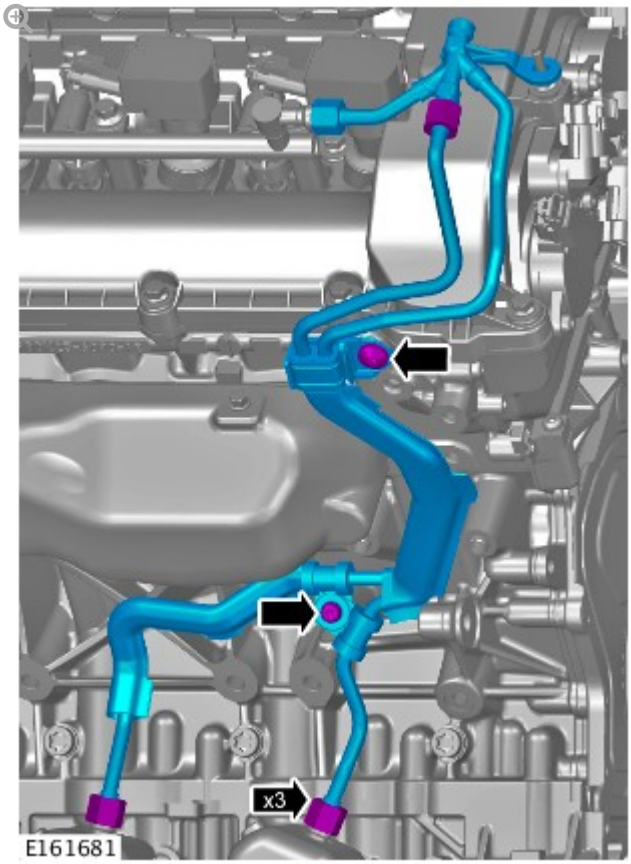

2.

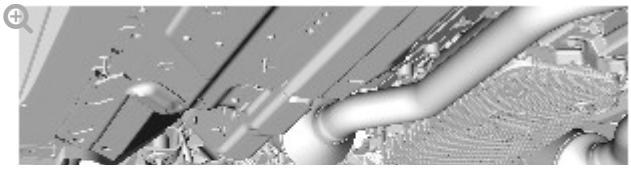

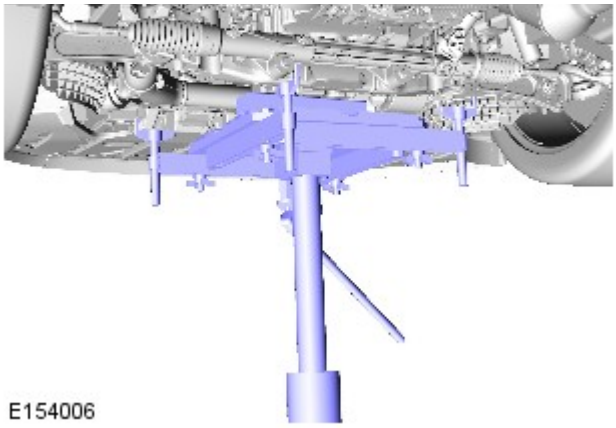

Remove the special tool.

3.

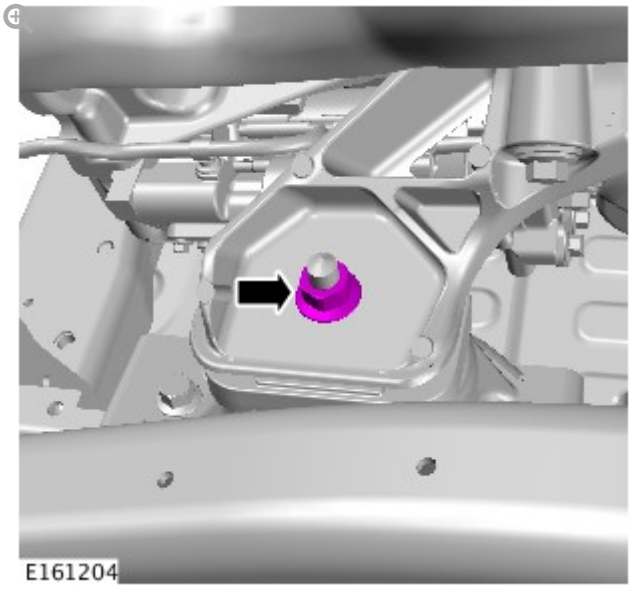

Torque: **100 Nm**

4.

NOTE:

Some components shown removed for clarity.

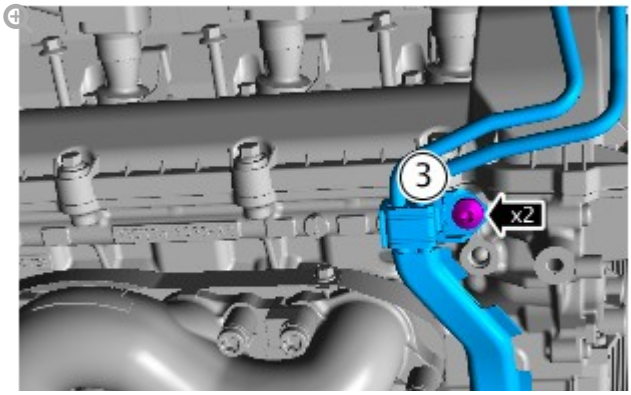

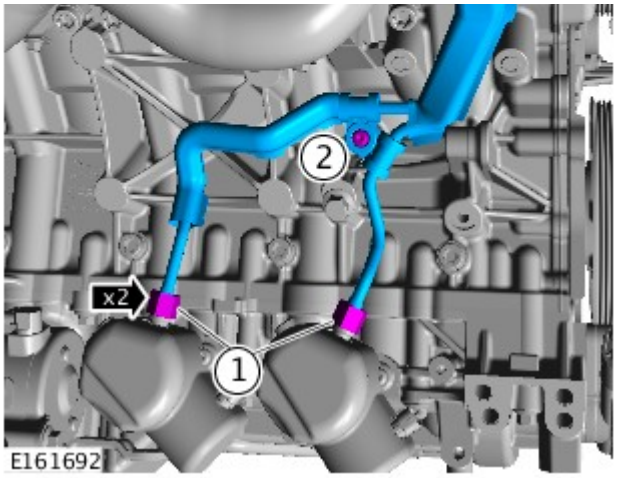

Torque:

Unions (1) **21 Nm**

M6 (2) **11 Nm**

M8 (3) **25 Nm**

5.

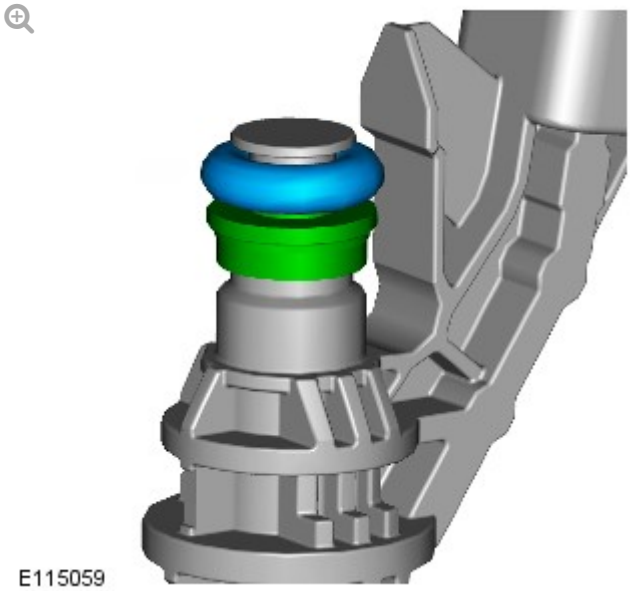

Install new O-ring seals.

6.

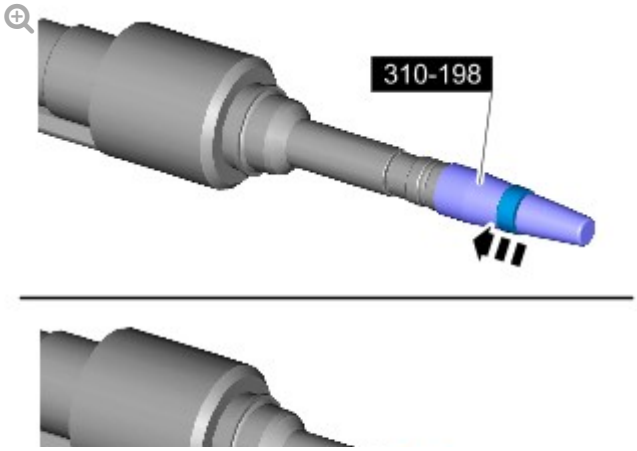

E115060

Install new Teflon seals.

Special Tool(s): 310-198

7.

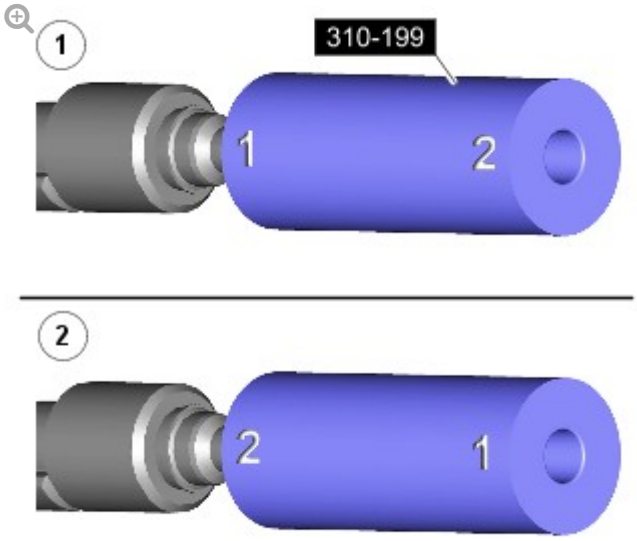

E115062

Special Tool(s): 310-199

8.

CAUTION:

If the original fuel injector is being installed, the original fuel injector clamp must installed with the fuel injector it was removed with.

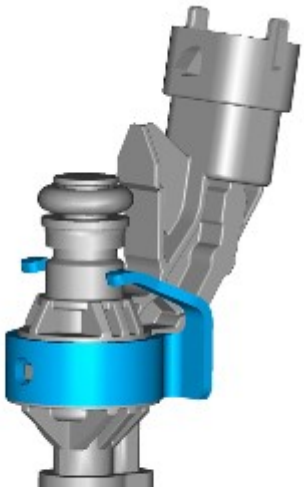

E115057

9. **CAUTION:**

> If a new cylinder head has been installed then the special tool 310-200-02 without the thread must be used to install the fuel rail.

NOTE:

> LH illustration shown, RH is similar.

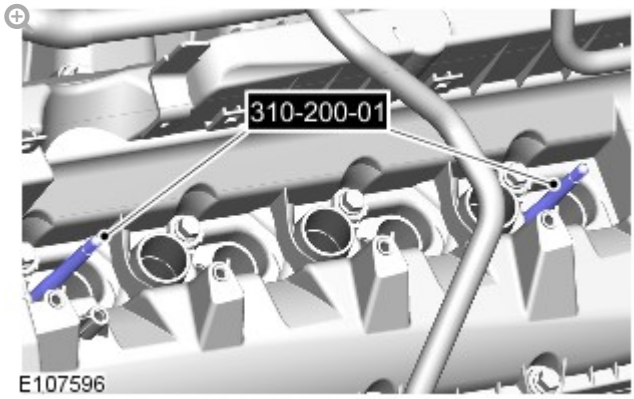

E107596

Special Tool(s): 310-200-01, 310-200-02

10. **CAUTIONS:**

- Make sure that the area around the open fuel injector ports are clean and free of foreign material and lubricant prior to installing the fuel injector.
- When installing the fuel injector(s), make sure that the Teflon seal is clean and free of foreign material and lubricant.

NOTE:

LH illustration shown, RH is similar.

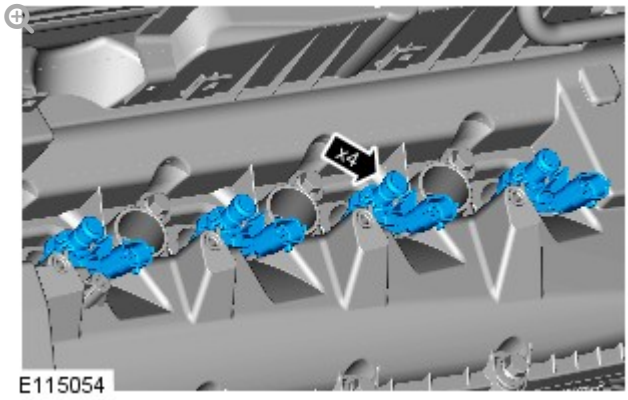

11. **NOTE:**

This step is only required if a new fuel rail is installed.

Refer to: Fuel Rail Pressure (FRP) Sensor (303-14C Electronic Engine Controls - V8 5.0L Petrol, Removal and Installation).

12. **CAUTIONS:**

- If new fuel injectors are installed, a new injector clamp must be installed.
- Make sure that the fuel injector is aligned and installed into the fuel rail correctly, as noted in the removal step.
- Tighten the fuel rail retaining bolts a turn at a time until the correct torque is achieved.

NOTES:

- Lubricate the fuel injector O-ring seals with clean engine oil.

- LH illustration shown, RH is similar.

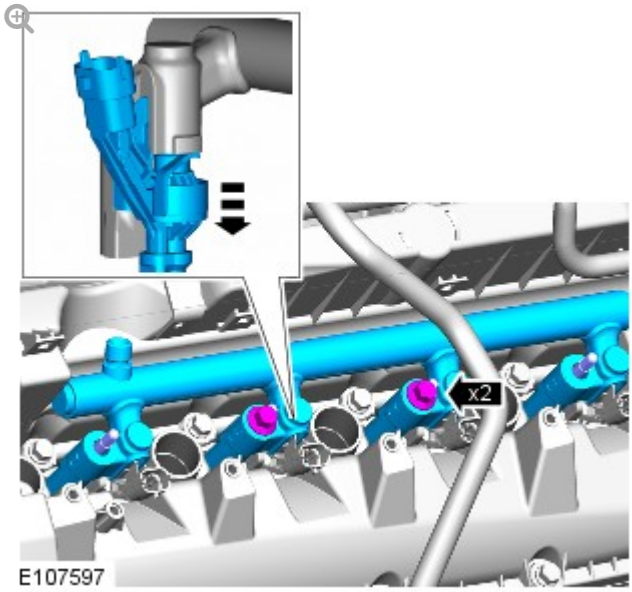

Torque: **20 Nm**

13. **NOTE:**

LH illustration shown, RH is similar.

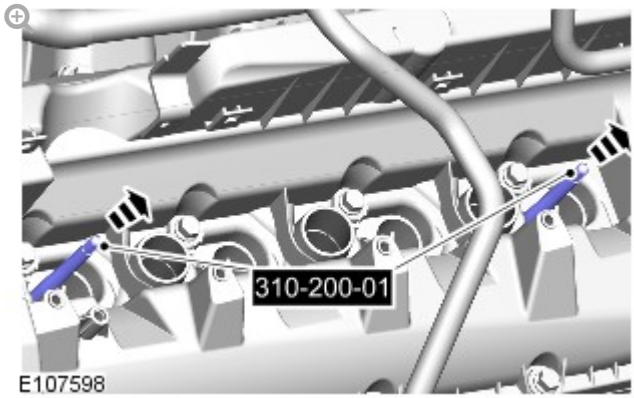

Special Tool(s): 310-200-01, 310-200-02

14. **NOTE:**

LH illustration shown, RH is similar.

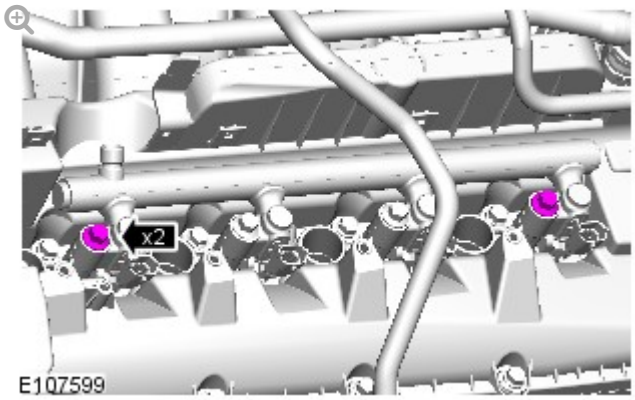

Torque: **20 Nm**

15. **NOTES:**

- Tighten the bolts in the indicated sequence.
- LH illustration shown, RH is similar.

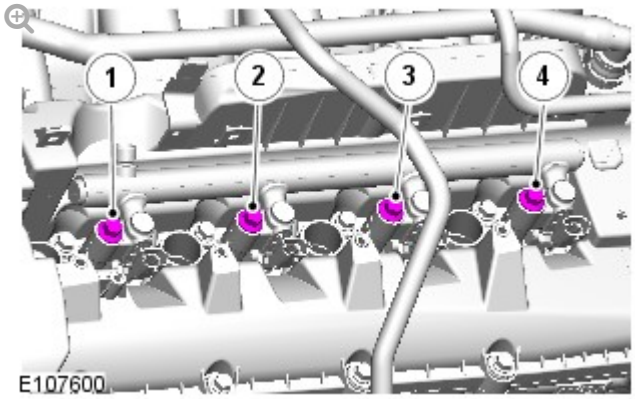

Torque:

Bolt 2 **30 Nm**

Bolt 3 **30 Nm**

Bolt 1 **30 Nm**

Bolt 4 **30 Nm**

16. **NOTE:**

LH illustration shown, RH is similar.

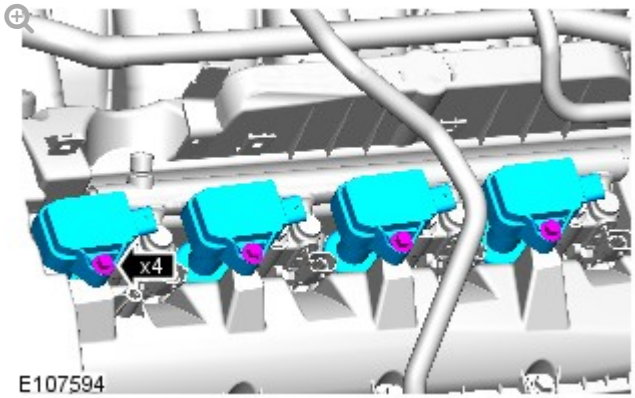

Torque: **7 Nm**

17. **NOTE:**

LH illustration shown, RH is similar.

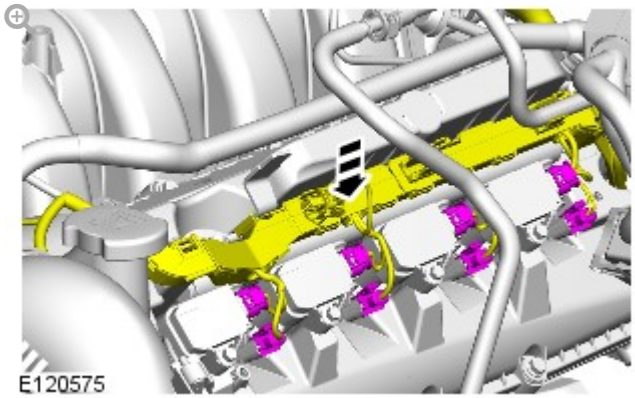

18. **NOTE:**

If equipped.

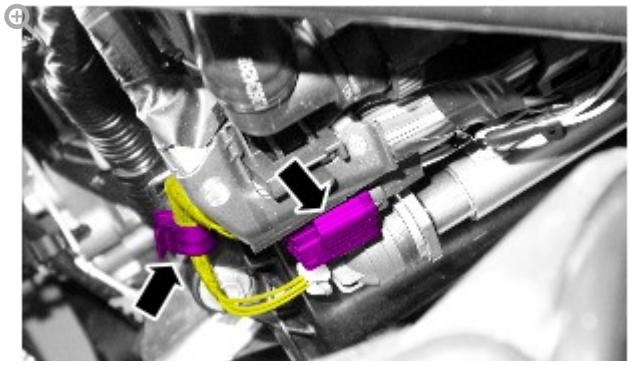

19.

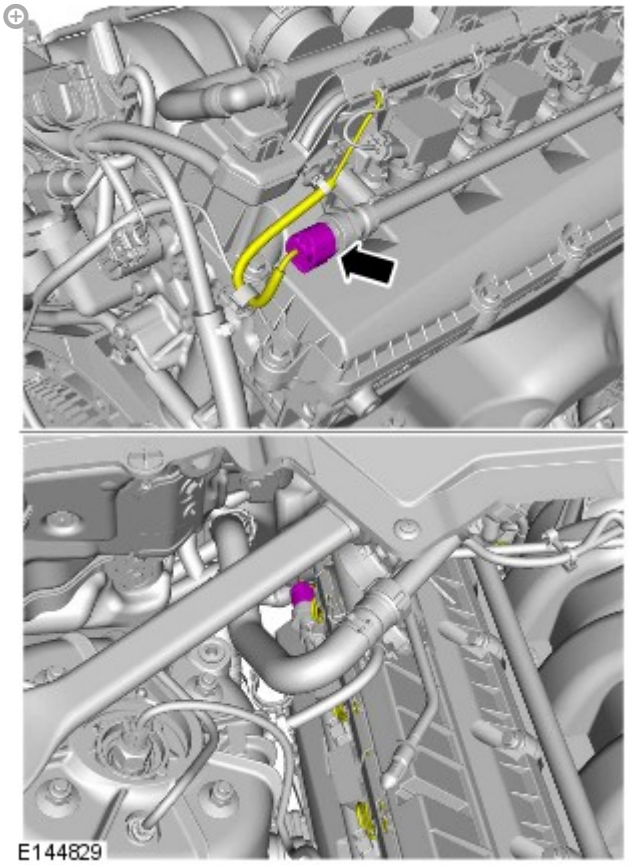

20.

NOTE:

Remove and discard the blanking caps.

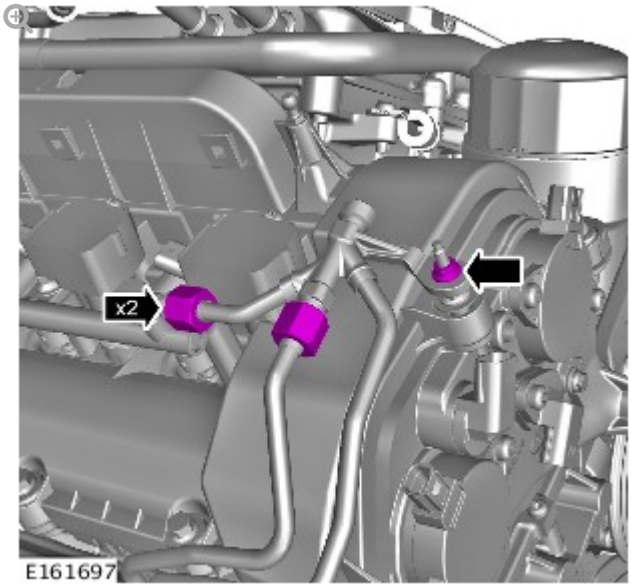

Torque:

Unions **21 Nm**

Nut **6 Nm**

21. **WARNING:**

> Do not work on or under a vehicle supported only by a jack. Always support the vehicle on safety stands.

Raise and support the vehicle.

22. **NOTE:**

> Some components shown removed for clarity.

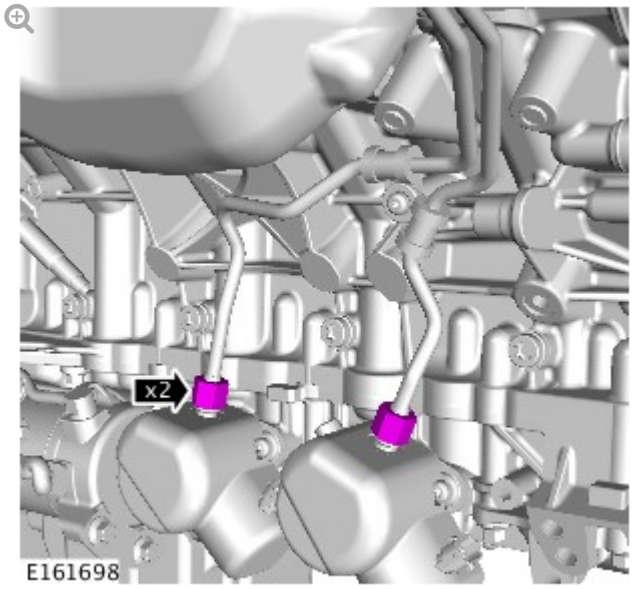

Torque: **21 Nm**

23.

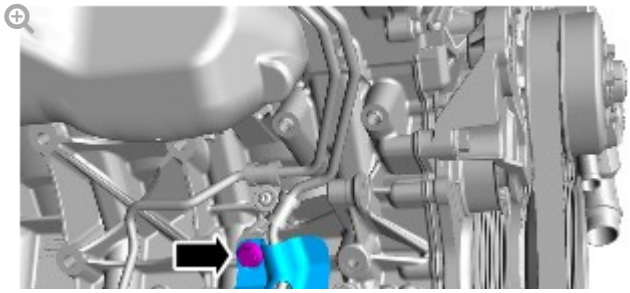

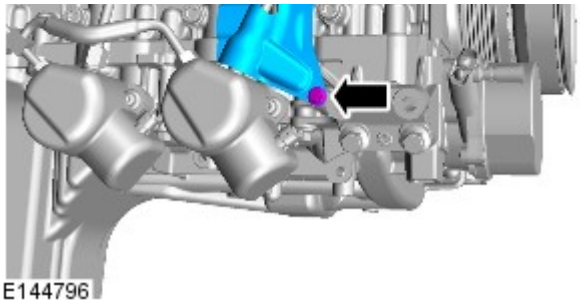

Torque:

M6 **12 Nm**

M10 **29 Nm**

24.

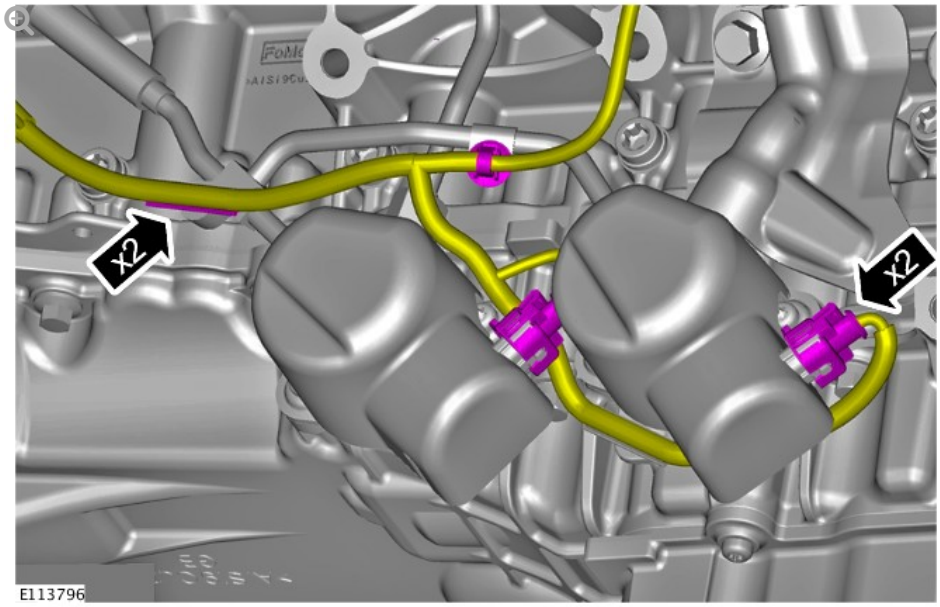

25.

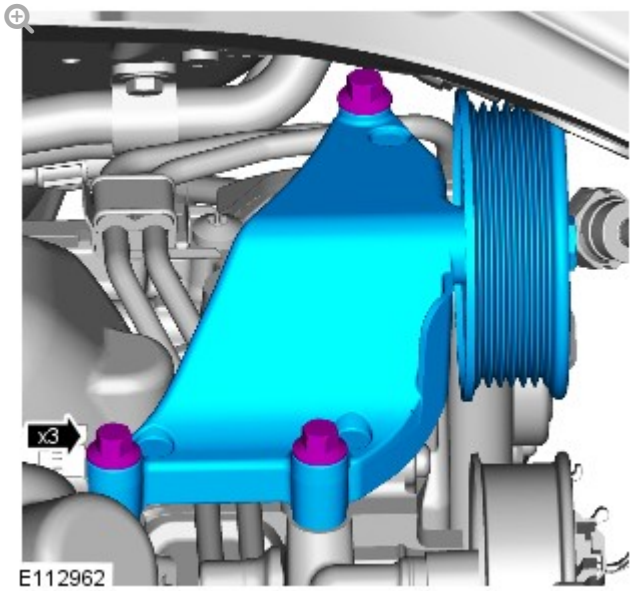

Torque: **25 Nm**

26. Refer to: Generator (414-02B Generator and Regulator - TDV8 4.4L Diesel, Removal and Installation).

27.

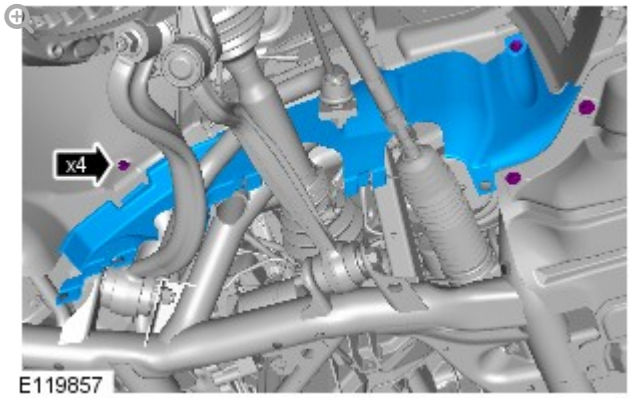

E119857

28.

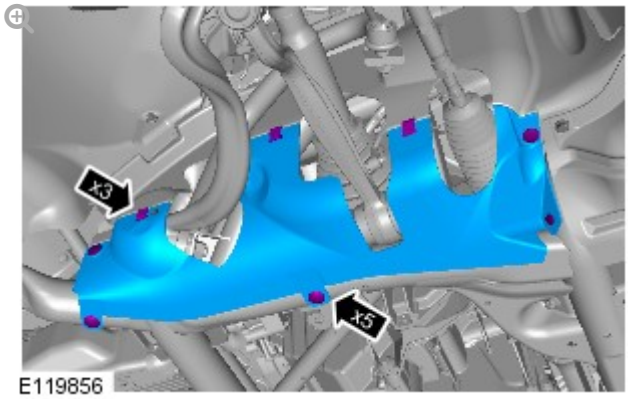

E119856

29. Lower the vehicle.

30.

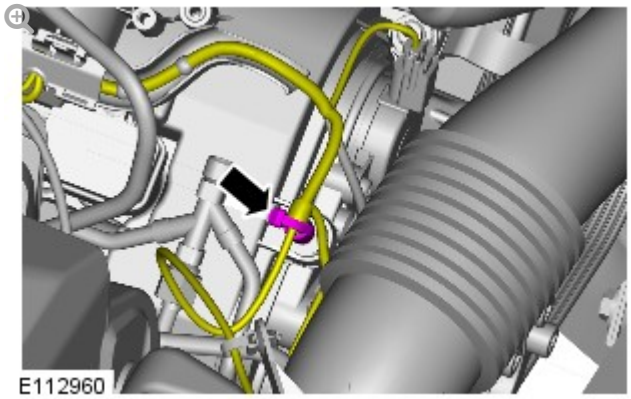
E112960

31.

CAUTION:

Lubricate only the union threads with clean engine oil.

NOTES:

2012.0 RANGE ROVER (LM), 303-04

FUEL CHARGING AND CONTROLS - V8 S/C 5.0L PETROL

HIGH PRESSURE FUEL PUMP 1 (G1225237)

REMOVAL AND INSTALLATION

19.45.31	HIGH PRESSURE FUEL PUMP - REAR - RENEW	5000 CC, AJ V8, SUPERCHARGED	3.8	USED WITHINS	+

REMOVAL

CAUTION:

Always carry out the cleaning process before carrying out any repairs to the fuel injection system components. Failure to follow this instruction may result in foreign matter ingress to the fuel injection system.

NOTE:

Removal steps in this procedure may contain installation details.

All vehicles

1. Refer to: Petrol and Petrol-Ethanol Fuel Systems Health and Safety Precautions (100-00 General Information, Description and Operation).

2. Refer to: Fuel System Pressure Release - V8 5.0L Petrol/V8 S/C 5.0L Petrol (310-00 Fuel System - General Information, General Procedures).

3. Disconnect the battery ground cable.
Refer to: Specifications (414-00 Battery and Charging System - General Information, Specifications).

4. **WARNING:**

   Do not work on or under a vehicle supported only by a jack. Always support the vehicle on safety stands.

   Raise and support the vehicle.

5. Refer to: Engine Undershield (501-02 Front End Body Panels, Removal and Installation).

6. Refer to: Fuel Injection Component Cleaning (303-04E Fuel Charging and Controls - V8 S/C 5.0L Petrol, General Procedures).

7. Refer to: Air Cleaner Outlet Pipe T-Connector (303-12D Intake Air Distribution and Filtering - V8 S/C 5.0L Petrol, Removal and Installation).

8. **CAUTION:**

   Be prepared to collect escaping coolant.

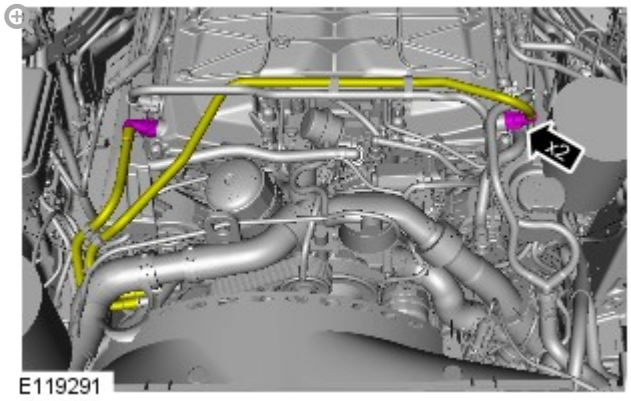

9.

WARNING:

Be prepared to collect escaping fluids.

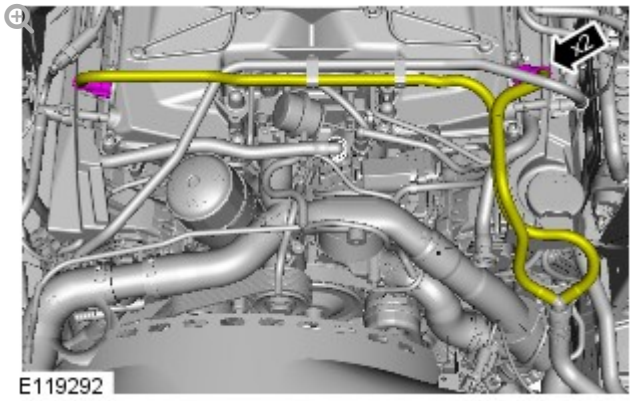

10.

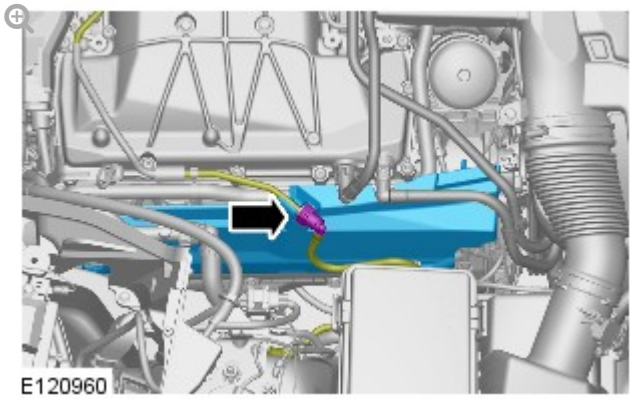

11.

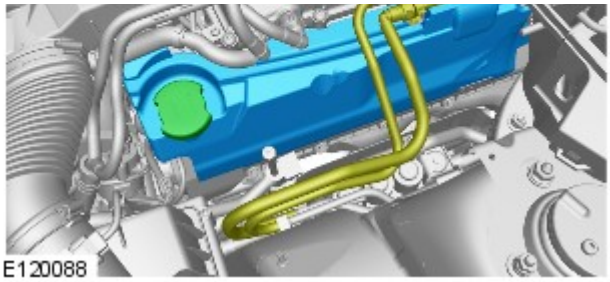

12.

CAUTIONS:

- Be prepared to collect escaping fluids.
- Make sure that all openings are sealed. Use new blanking caps.

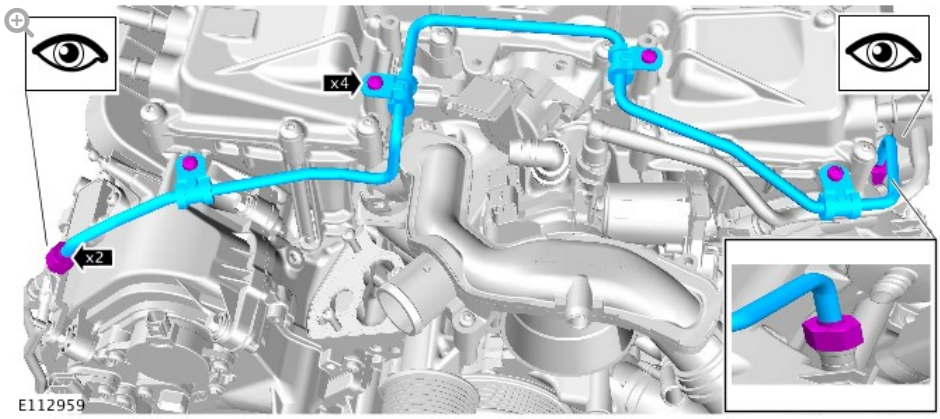

13.

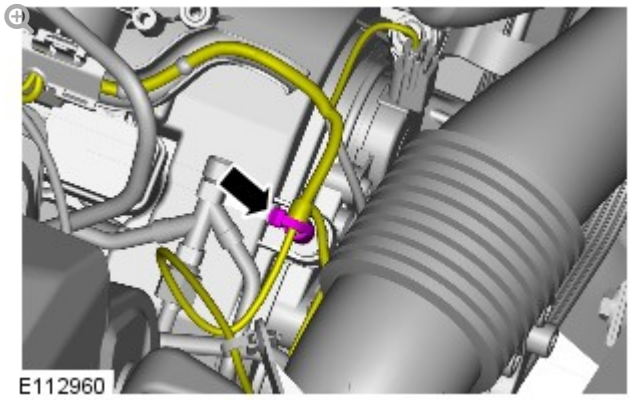

14.

CAUTIONS:

- Be prepared to collect escaping fluids.

- Make sure that all openings are sealed. Use new blanking caps.

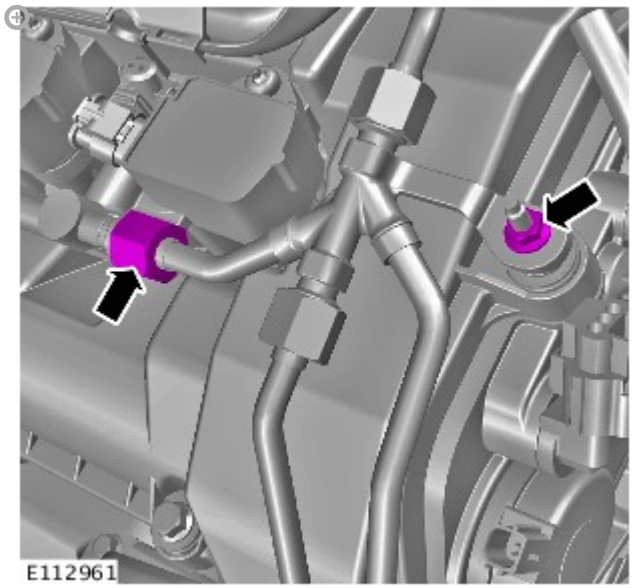

15. **WARNING:**

Do not work on or under a vehicle supported only by a jack. Always support the vehicle on safety stands.

Raise and support the vehicle.

16. Refer to: Engine Mount RH (303-01D Engine - V8 S/C 5.0L Petrol, Removal and Installation).

17. Refer to: Generator - V8 S/C 5.0L Petrol (414-02C Generator and Regulator - V8 5.0L Petrol/V8 S/C 5.0L Petrol, Removal and Installation).

Left-hand drive vehicles

1.

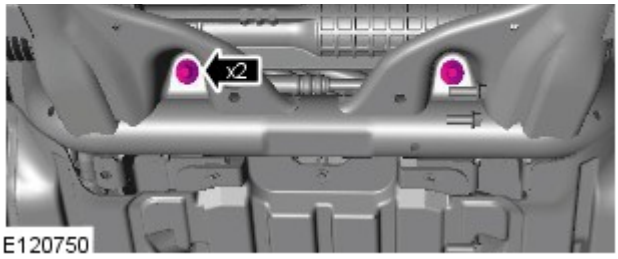

2.

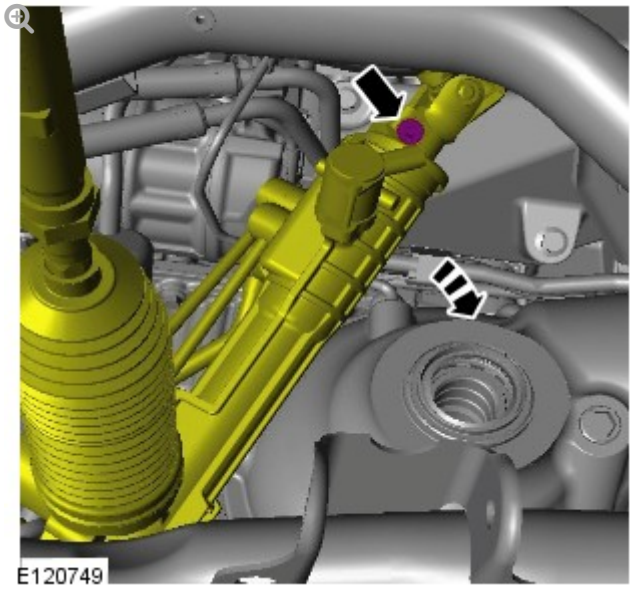

All vehicles

1.

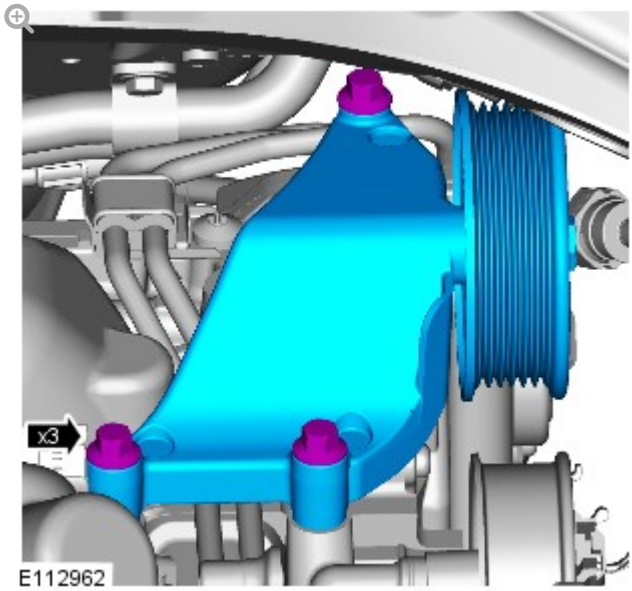

2.

NOTE:

Engine shown removed for clarity.

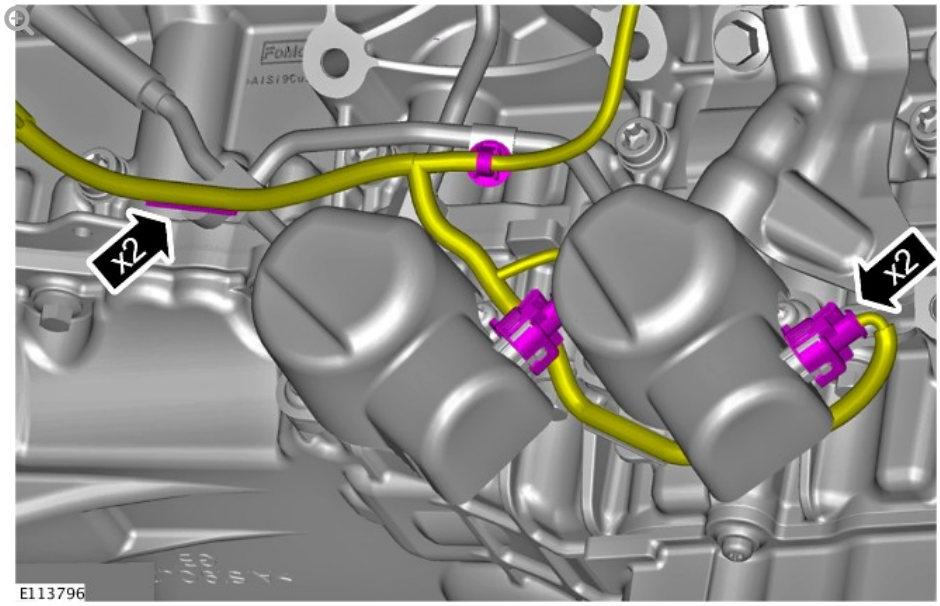

3.

CAUTIONS:

- Be prepared to collect escaping fluids.
- Make sure that all openings are sealed. Use new blanking caps.

NOTE:

Engine shown removed for clarity.

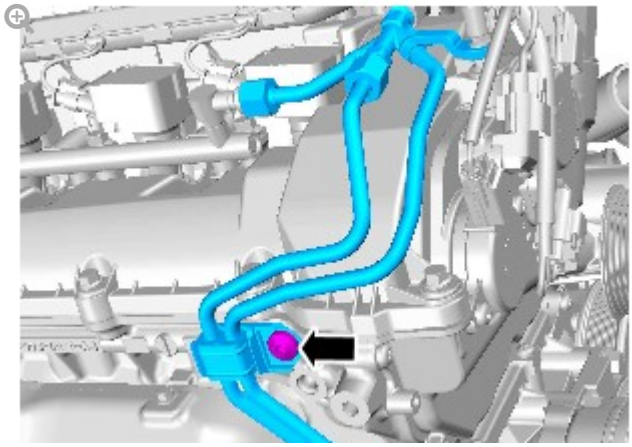

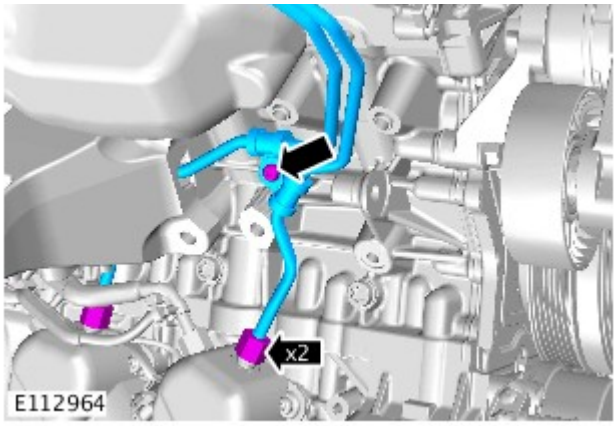

4. **CAUTIONS:**

- Be prepared to collect escaping fluids.
- Make sure that all openings are sealed. Use new blanking caps.

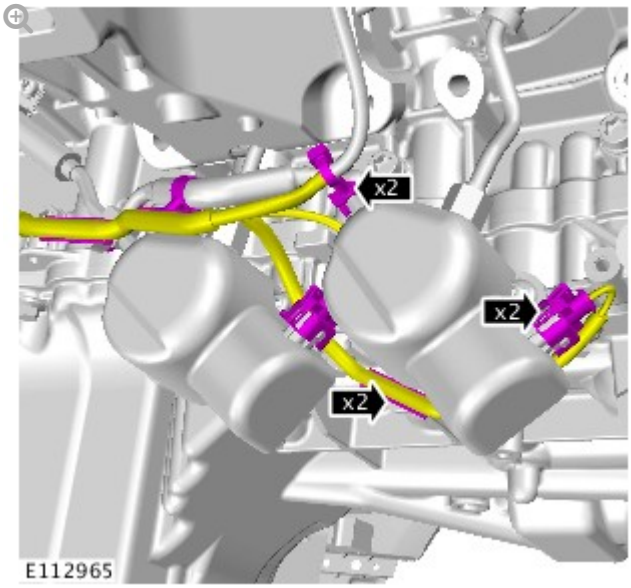

5.

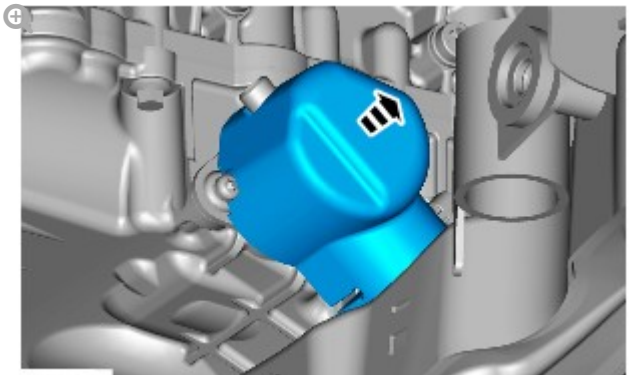

E112966

6. **CAUTION:**

Be prepared to collect escaping fluids.

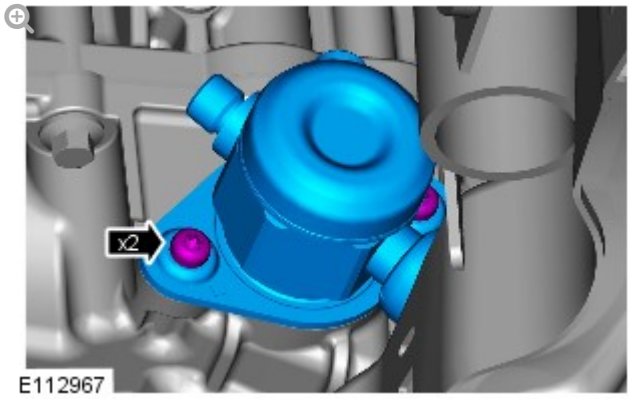

E112967

Loosen the Torx screws a turn each at a time.

7. **CAUTION:**

Be prepared to collect escaping fluids.

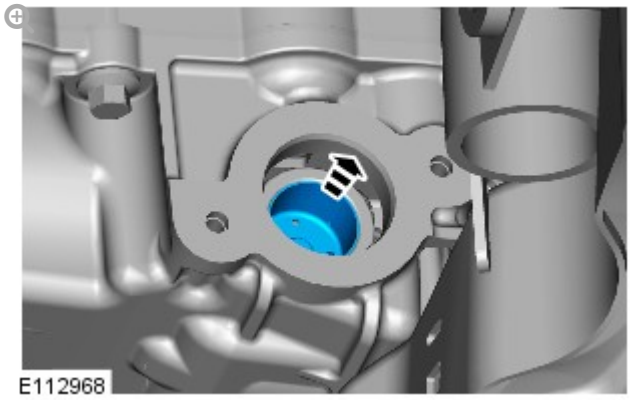
E112968

INSTALLATION

All vehicles

1.

NOTE:

Lubricate the fuel rail high-pressure fuel pump bucket with clean engine oil.

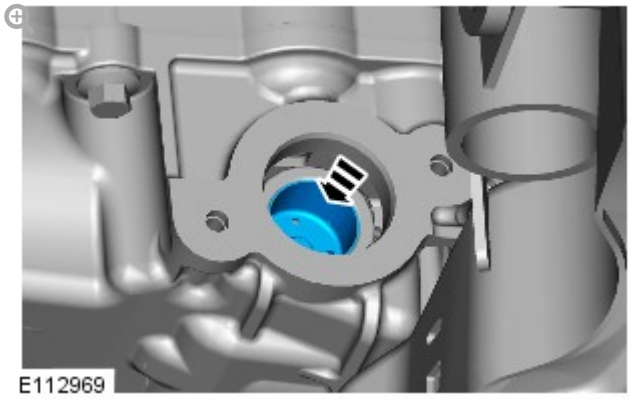

2.

CAUTION:

Tighten the Torx screws a turn at a time until the correct torque is achieved.

NOTE:

Lubricate the fuel rail high-pressure fuel pump O-ring seal with clean engine oil.

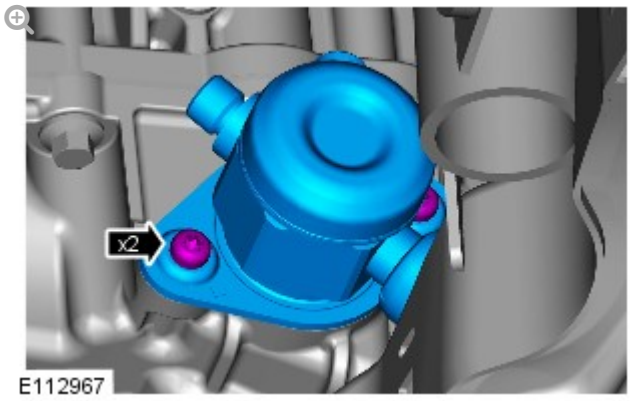

Torque: **11 Nm**

3.

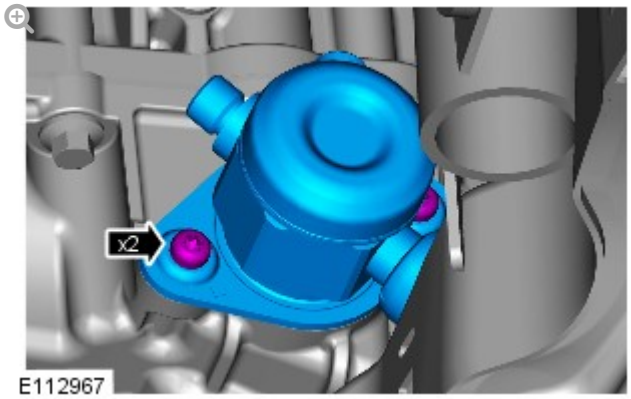

Loosen the Torx screws half a turn each.

4.

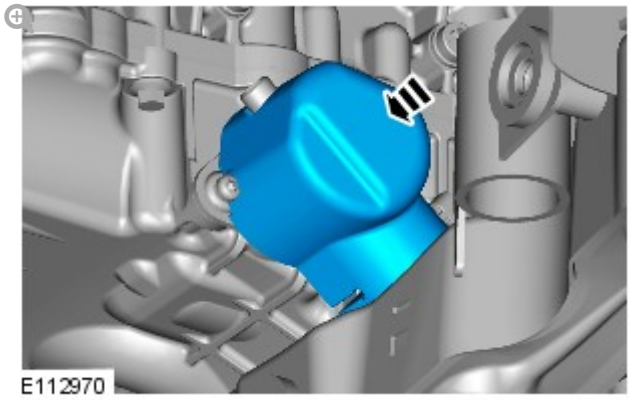

5.

CAUTIONS:

- Install new high-pressure fuel supply lines.
- Lubricate only the union threads with clean engine oil.

NOTES:

- Remove and discard the blanking caps.
- Engine shown removed for clarity.
- Install the bolt and unions fully finger tight before final tightening.

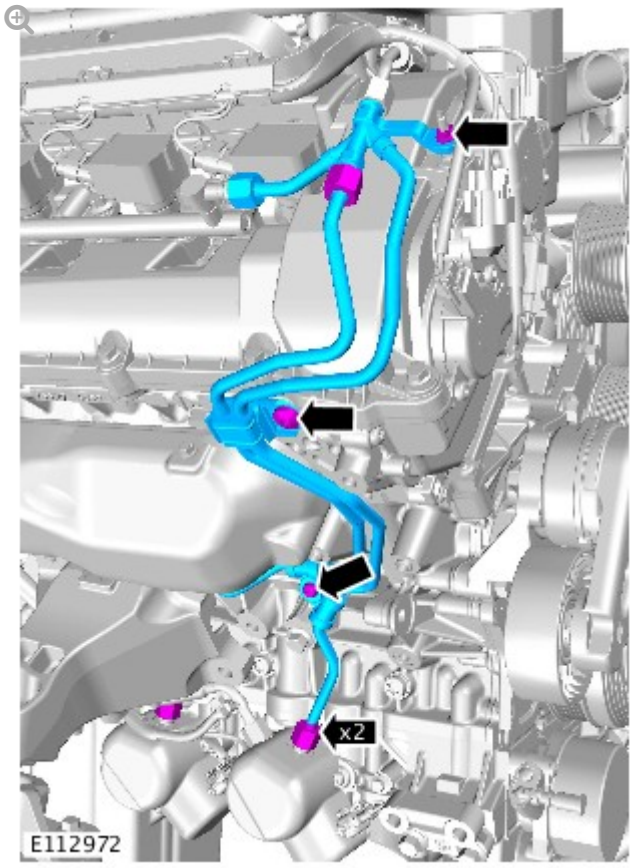

6.

CAUTION:

Care must be taken when positioning the fuel rail high-pressure fuel pump cover to one side.

NOTE:

Fuel rail high-pressure fuel pump cover shown removed for clarity.

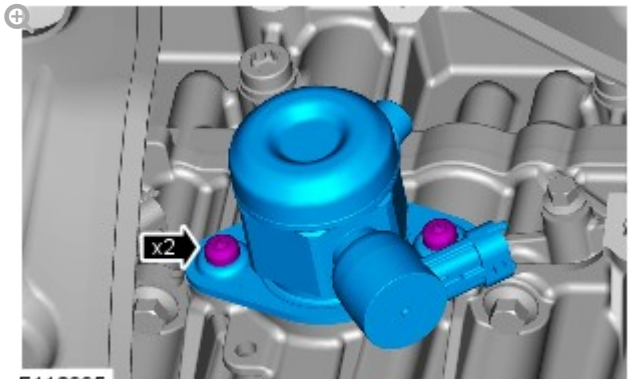

E112995

Torque: **11 Nm**

7. Lower the vehicle.

8. **NOTES:**

- Do not tighten at this stage.
- Remove and discard the blanking caps.

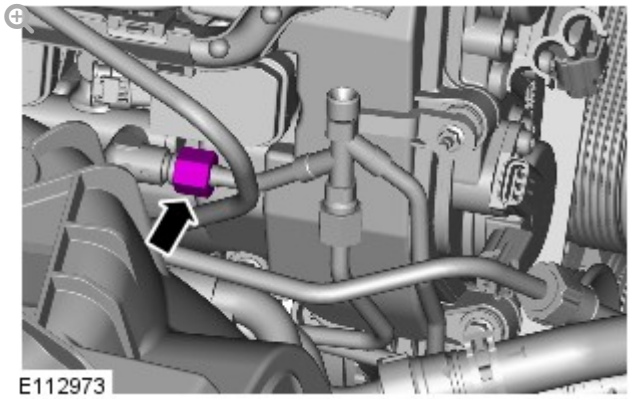
E112973

9. **NOTE:**

Engine shown removed for clarity.

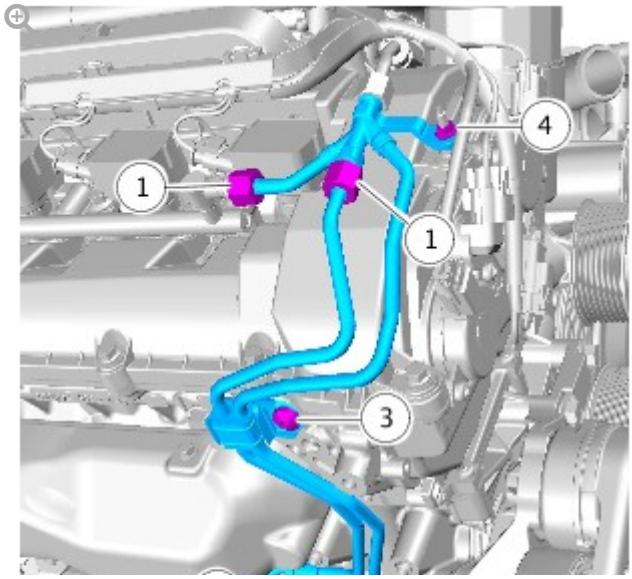

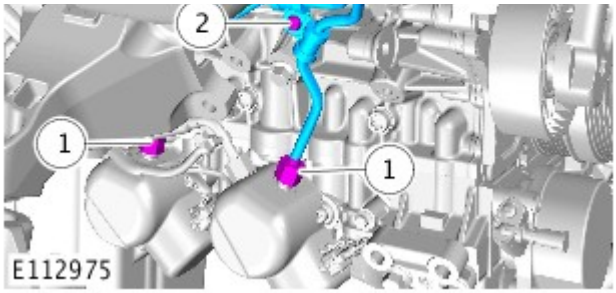

- *Torque:*

  Unions (1) **21 Nm**

  M6 (2) **11 Nm**

  M8 (3) **25 Nm**

  M5 nut (4) **6 Nm**

10. **NOTE:**

Engine shown removed for clarity.

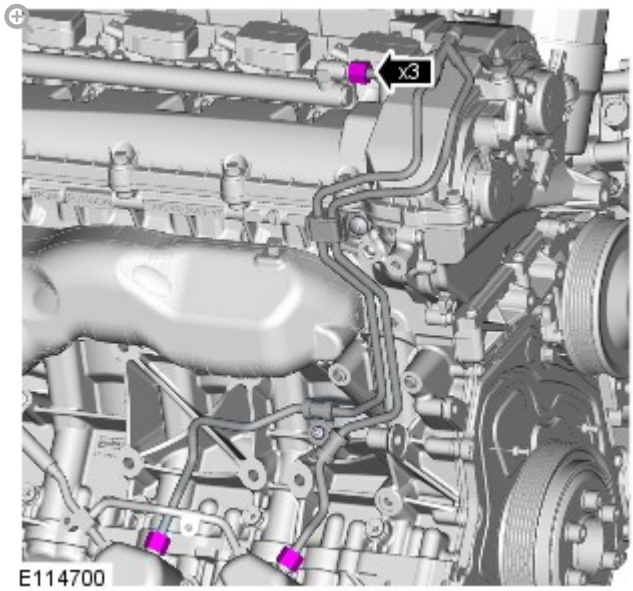

Torque: **21 Nm**

11. **NOTES:**

- Install the bolt and unions finger tight before final tightening.
- Remove and discard the blanking caps.

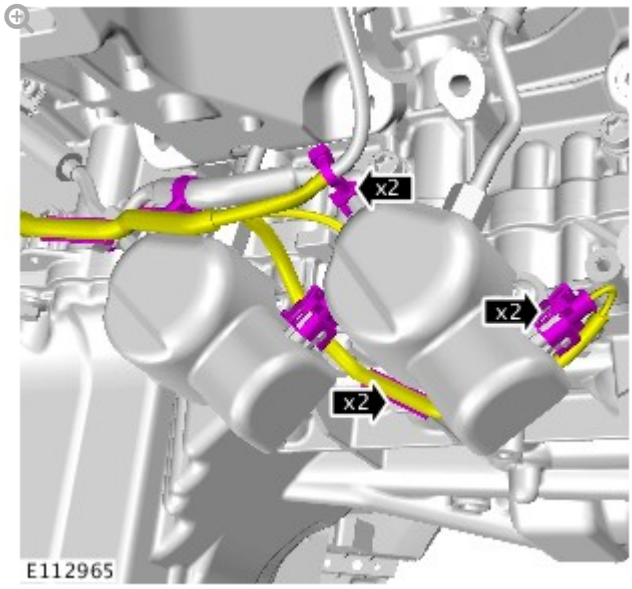

- *Torque:*

  Unions **21 Nm**

  M6 **11 Nm**

12.

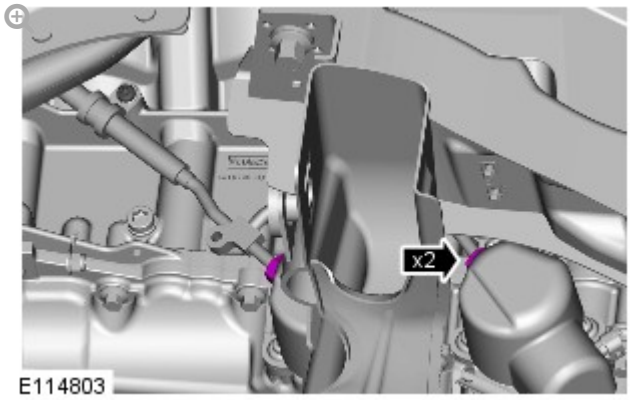

Torque: **21 Nm**

13.

NOTE:

Engine shown removed for clarity.

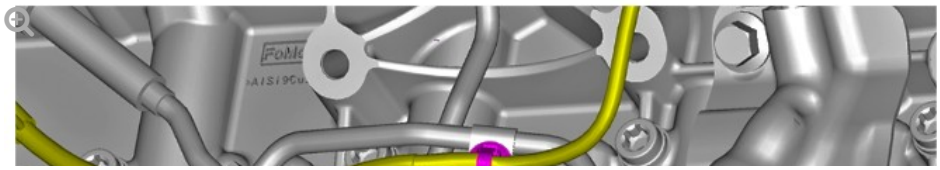

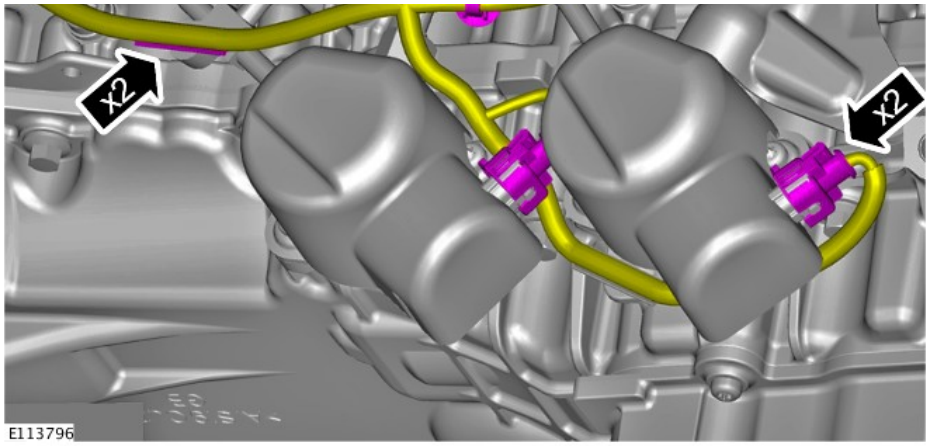

14.

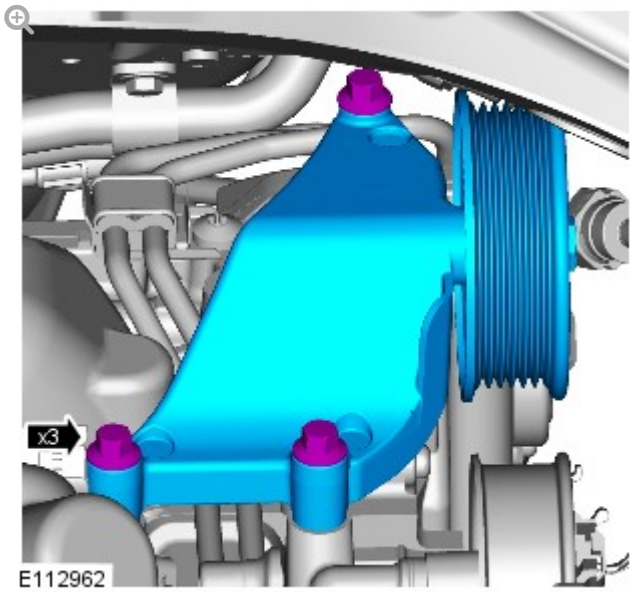

Torque: **25 Nm**

	Left-hand drive vehicles

1.

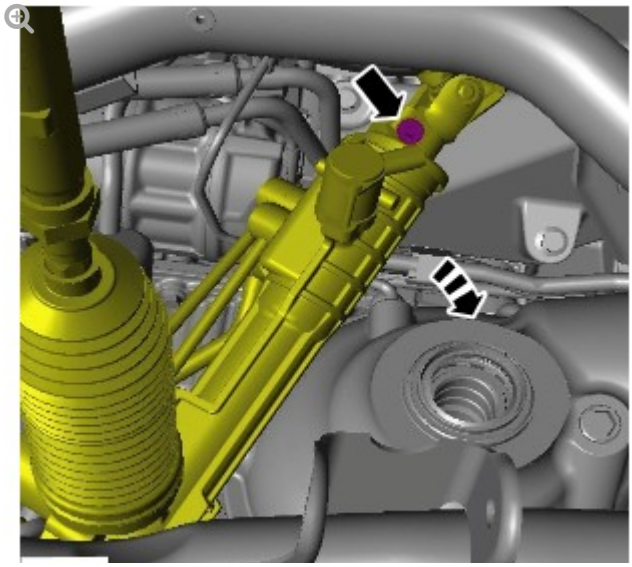

E120749

Torque: **24 Nm**

2.

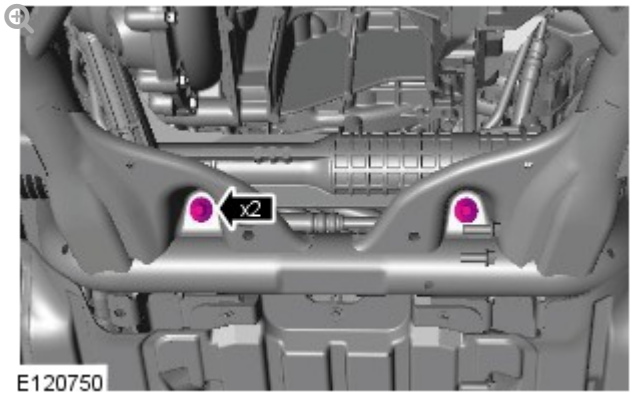

E120750

Torque: **100 Nm**

All vehicles

1. Refer to: Generator - V8 S/C 5.0L Petrol (414-02C Generator and Regulator - V8 5.0L Petrol/V8 S/C 5.0L Petrol, Removal and Installation).

2. Refer to: Engine Mount RH (303-01D Engine - V8 S/C 5.0L Petrol, Removal and Installation).

3. Lower the vehicle.

4.

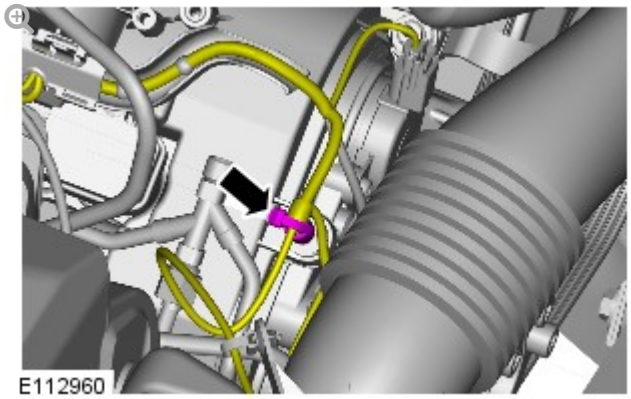
E112960

5.

NOTES:

- Do not tighten at this stage.
- Remove and discard the blanking caps.

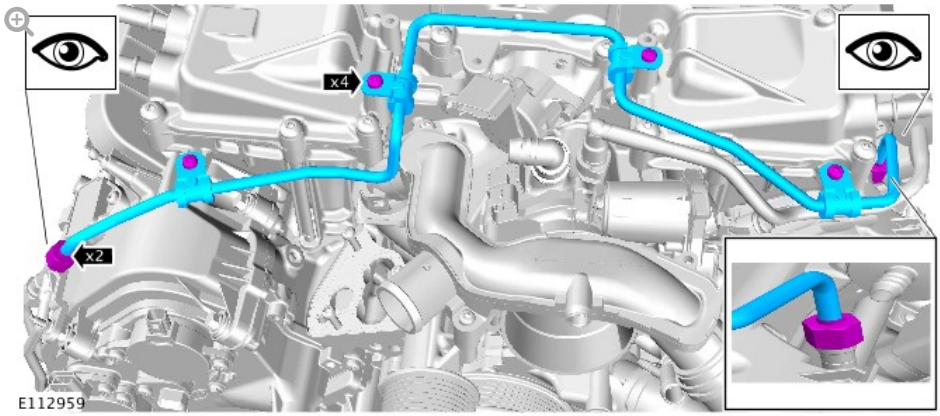

6.

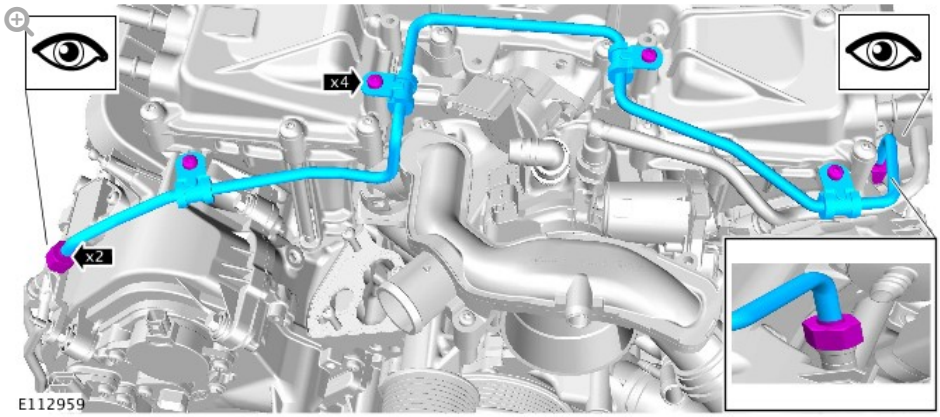

- *Torque:*

  Unions **21 Nm**

  Bolts **8 Nm**

7.

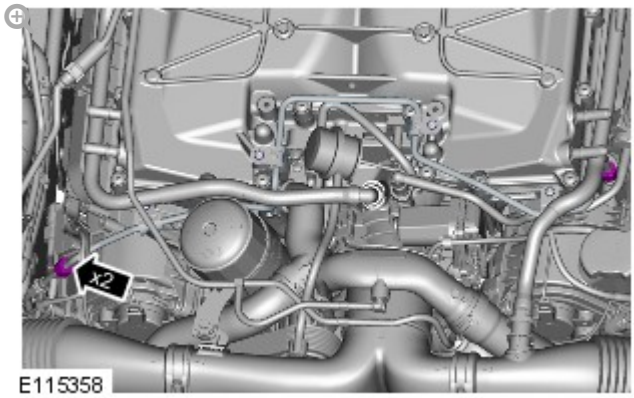

Torque: **21 Nm**

8.

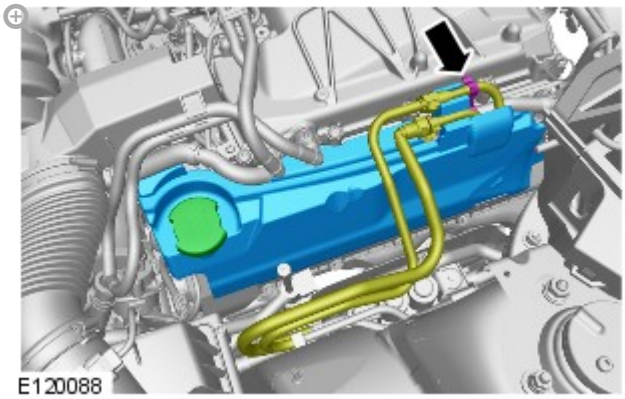

9.

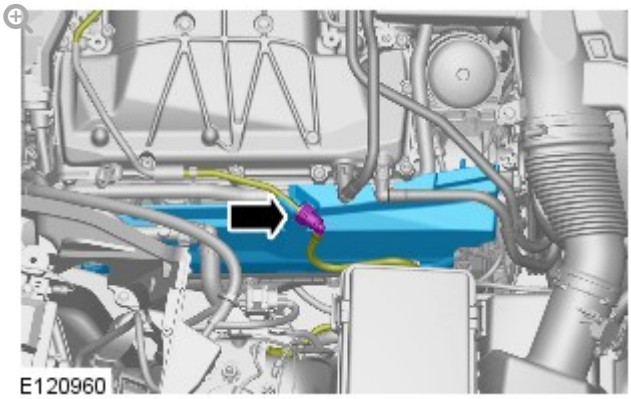

10.

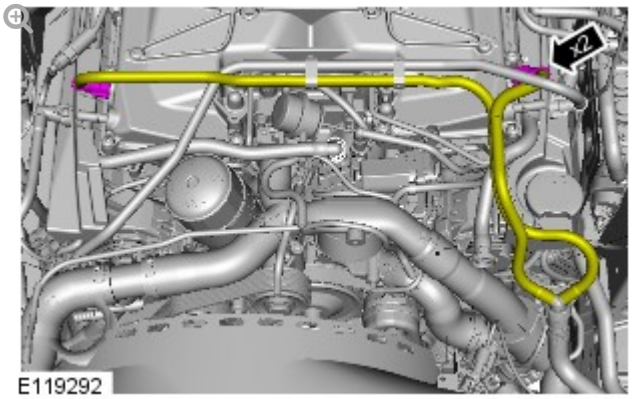

11.

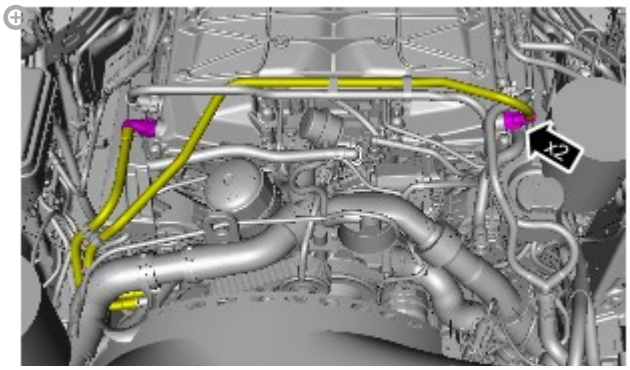

E119291

12. Refer to: Air Cleaner Outlet Pipe T-Connector (303-12D Intake Air Distribution and Filtering - V8 S/C 5.0L Petrol, Removal and Installation).

13. Refer to: Engine Undershield (501-02 Front End Body Panels, Removal and Installation).

14. Connect the battery earth lead.
Refer to: Specifications (414-00 Battery and Charging System - General Information, Specifications).

15.
- Start the engine and allow to run for 10 minutes, stop the engine.
- Check for leaks.

16. **CAUTIONS:**

- Make sure that the selector lever and the gearshift mechanism are in the park (P) position.
- Make sure that the hood is open.

- Turn the ignition on.

17.

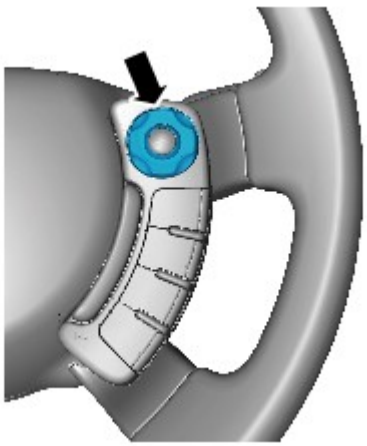

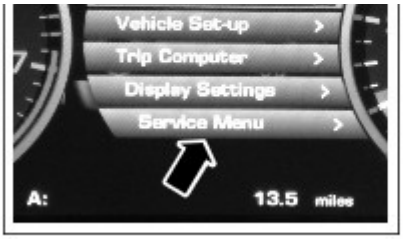

E122817

- Press the right-hand directional button to access the instrument cluster menu.

18.

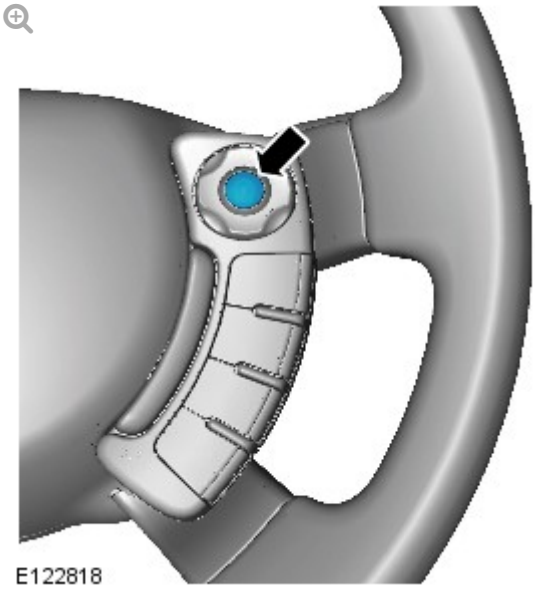

E122818

- Press the right-hand OK button.

19.

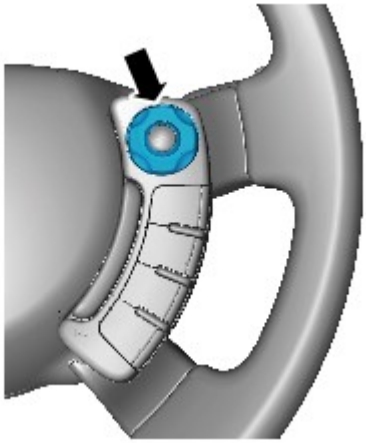

E122819

- Press the right-hand directional button to access the Oil Level Display.

20.

E122820

- Press the right-hand OK button and follow the instructions.

21.

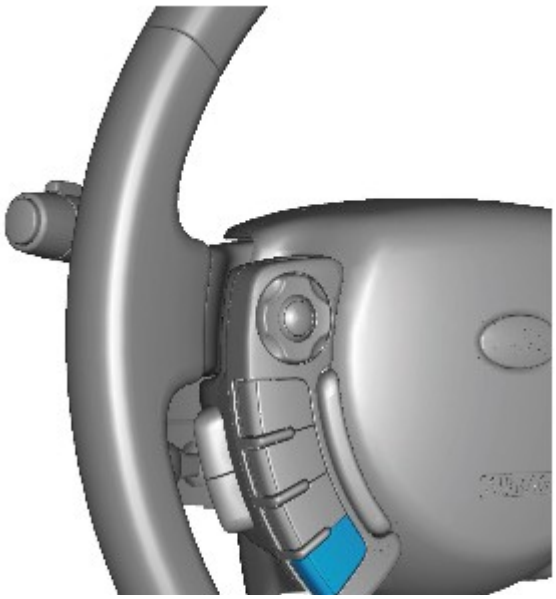

E119496

- Press the cruise control cancel button twice within 2 seconds.

22.

E122821

- The message center display will revert to the normal display in the trip computer.
-
-
- Check that the oil level display shows an oil level reading.
- Only after having started and run the engine for 10 minutes (as indicated in Step 31), switch off the engine, then stabilizing for 10 minutes, take a reading from the oil level display and, if necessary top up with engine oil.

23. Turn the ignition off.

24. Allow 10 minutes for the engine oil level to stabilize if there has been additional oil top up.

25. **NOTE:**

> The following steps are to update the average oil level value.

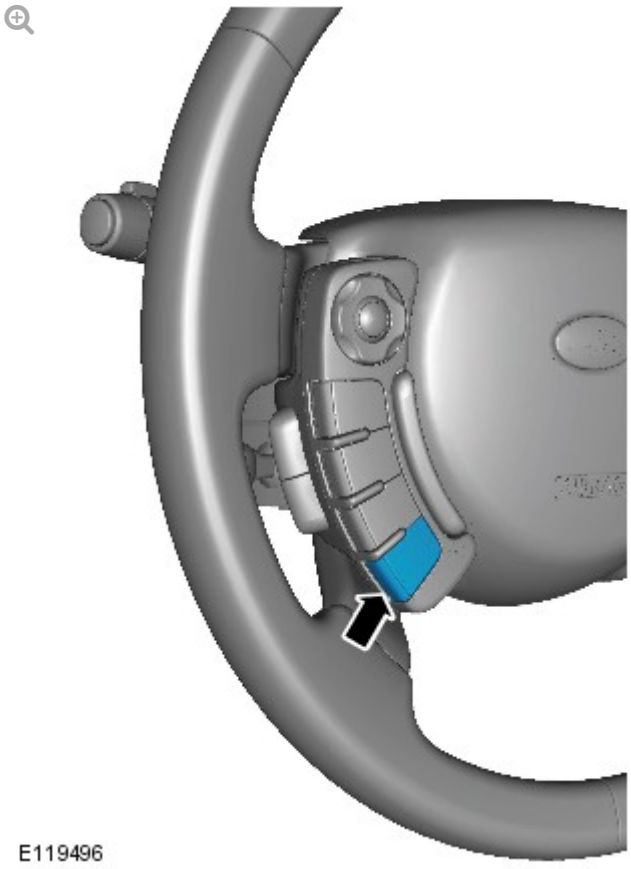

- Turn the ignition on.
- Press and hold the cruise control cancel button for more than 2 seconds.

26. - The message center display will revert to the normal display in the trip computer.

27. Turn the ignition off.

28. Turn the ignition on.

29.

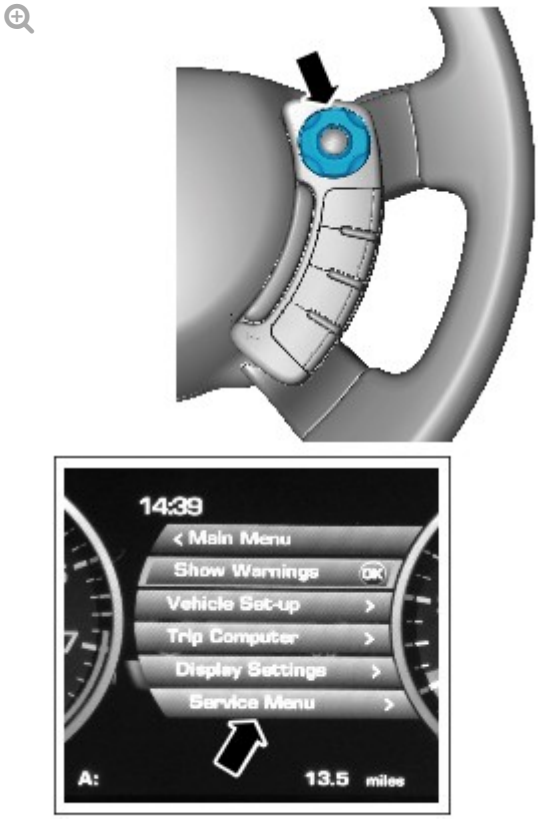

E122817

- Press the right-hand directional button to access the instrument cluster menu.

30.

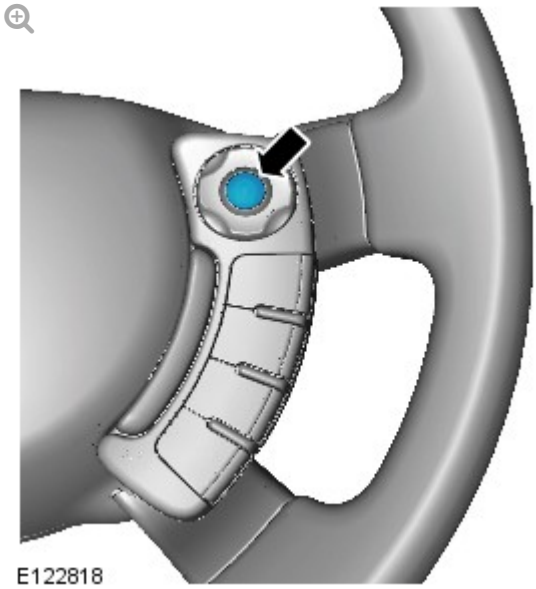

E122818

- Press the right-hand OK button.

31.

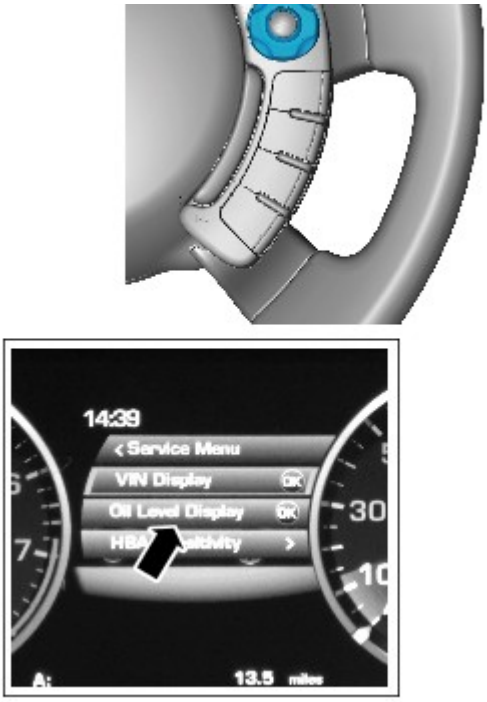

E122819

- Press the right-hand directional button to access the Oil Level Display.

32.

E122821

- Press the right-hand OK button and follow the instructions.
- Make sure that the average oil level value has now been

updated.

33. Refer to: Engine Cover - V8 5.0L Petrol/V8 S/C 5.0L Petrol (501-05 Interior Trim and Ornamentation, Removal and Installation).

2012.0 RANGE ROVER (LM), 303-04

FUEL CHARGING AND CONTROLS – V8 S/C 5.0L PETROL

HIGH PRESSURE FUEL PUMP

HIGH PRESSURE FUEL PUMP 2 (G1225238)

REMOVAL AND INSTALLATION

19.45.30	HIGH PRESSURE FUEL PUMP - FRONT - RENEW	5000 CC, AJ V8, SUPERCHARGED	4	USED WITHINS	+

REMOVAL

CAUTION:

Always carry out the cleaning process before carrying out any repairs to the fuel injection system components. Failure to follow this instruction may result in foreign matter ingress to the fuel injection system.

NOTES:

- Removal steps in this procedure may contain installation details.
- Some variation in the illustrations may occur, but the essential information is always correct.

1. Refer to: Petrol and Petrol-Ethanol Fuel Systems Health and Safety Precautions (100-00 General Information, Description and Operation).
2. Refer to: Fuel System Pressure Release - V8 5.0L Petrol/V8 S/C 5.0L Petrol (310-00 Fuel System - General Information, General Procedures).
3. Disconnect the battery ground cable

Disconnect the battery ground cable.

Refer to: Specifications (414-00 Battery and Charging System - General Information, Specifications).

4. **WARNING:**

> Do not work on or under a vehicle supported only by a jack. Always support the vehicle on safety stands.

Raise and support the vehicle.

5. Refer to: Engine Undershield (501-02 Front End Body Panels, Removal and Installation).

6. Refer to: Fuel Injection Component Cleaning (303-04E Fuel Charging and Controls - V8 S/C 5.0L Petrol, General Procedures).

7. Refer to: Air Cleaner Outlet Pipe T-Connector (303-12D Intake Air Distribution and Filtering - V8 S/C 5.0L Petrol, Removal and Installation).

8. **CAUTION:**

> Be prepared to collect escaping coolant.

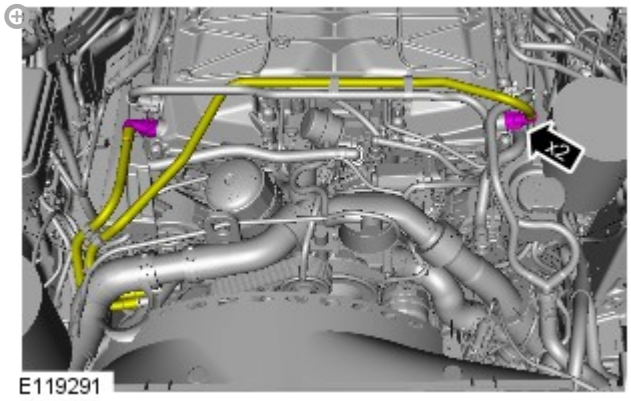

9. **WARNING:**

Be prepared to collect escaping fluids.

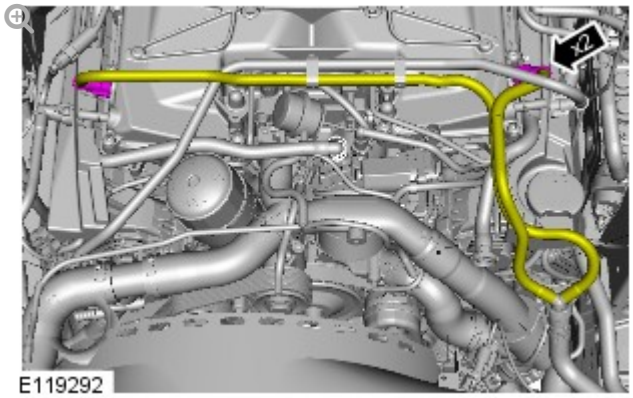

10. **CAUTION:**

Be prepared to collect escaping fluids.

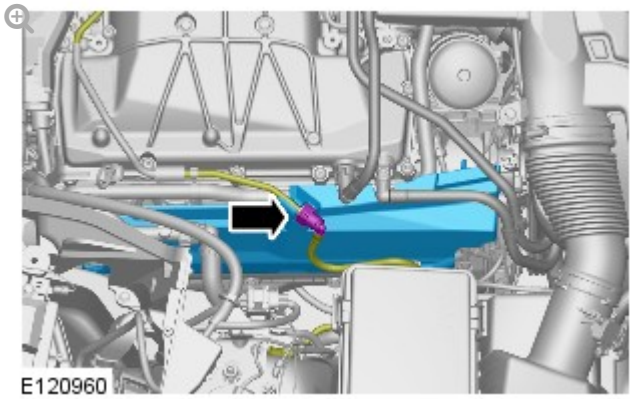

11. **CAUTION:**

Be prepared to collect escaping fluids.

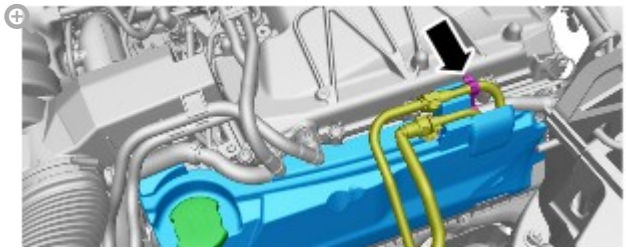

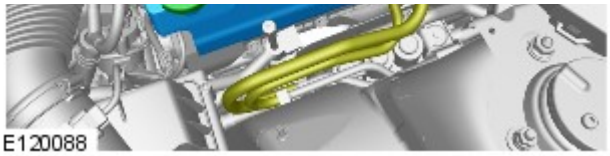

12.

CAUTION:

Be prepared to collect escaping fluids.

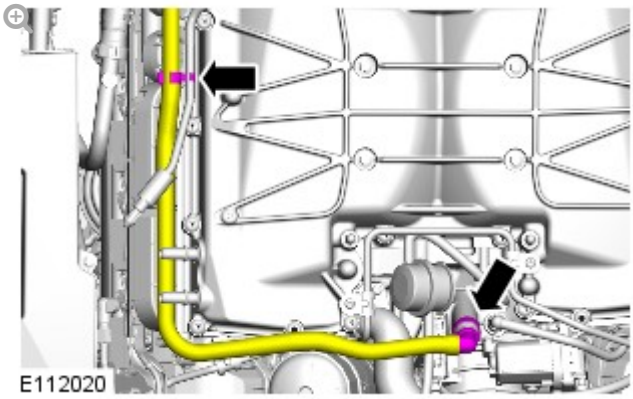

13.

CAUTIONS:

- Be prepared to collect escaping fluids.
- Make sure that all openings are sealed. Use new blanking caps.

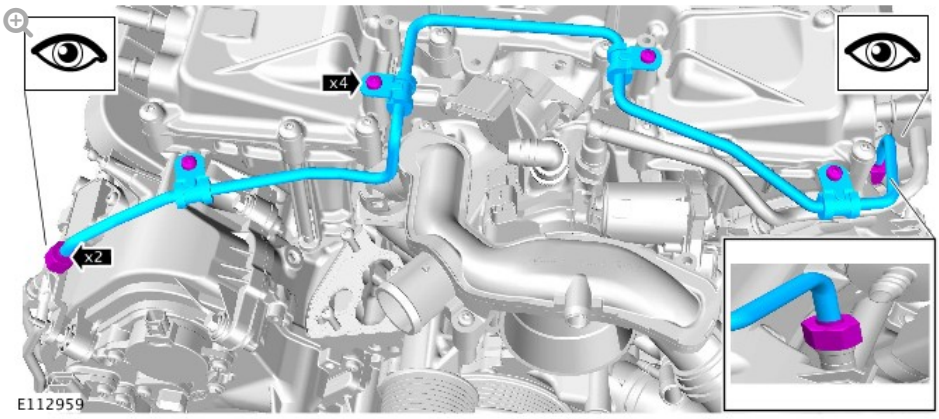

14.

14.

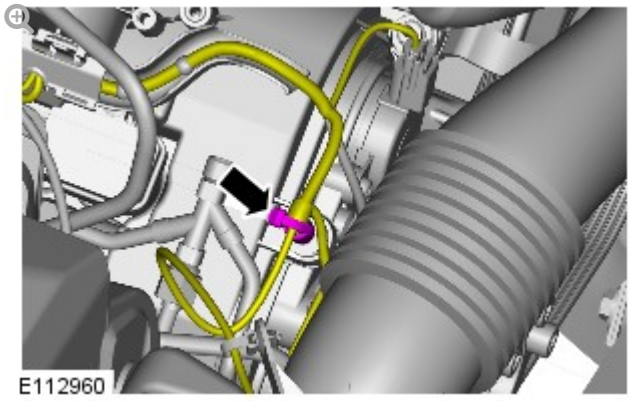

15.

CAUTIONS:

- Be prepared to collect escaping fluids.
- Make sure that all openings are sealed. Use new blanking caps.

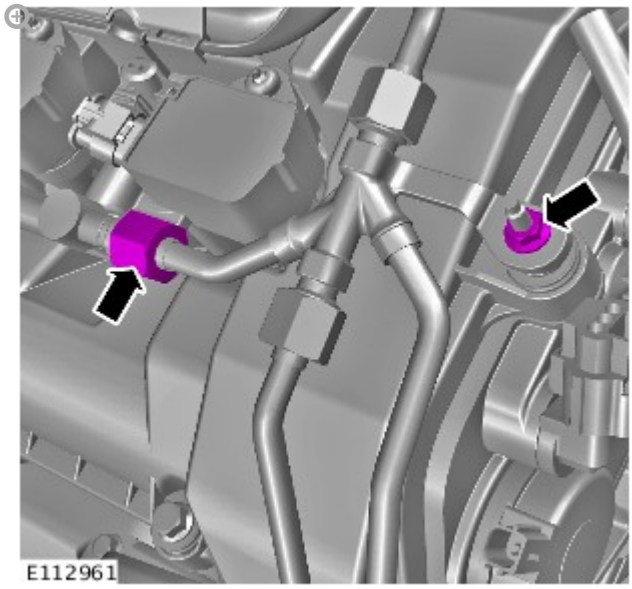

16.

WARNING:

Make sure to support the vehicle with axle stands.

Raise and support the vehicle.

17. Refer to: Engine Mount RH (303-01D Engine - V8 S/C 5.0L Petrol,

Removal and Installation).

18. Refer to: Generator - V8 S/C 5.0L Petrol (414-02C Generator and Regulator - V8 5.0L Petrol/V8 S/C 5.0L Petrol, Removal and Installation).

19.

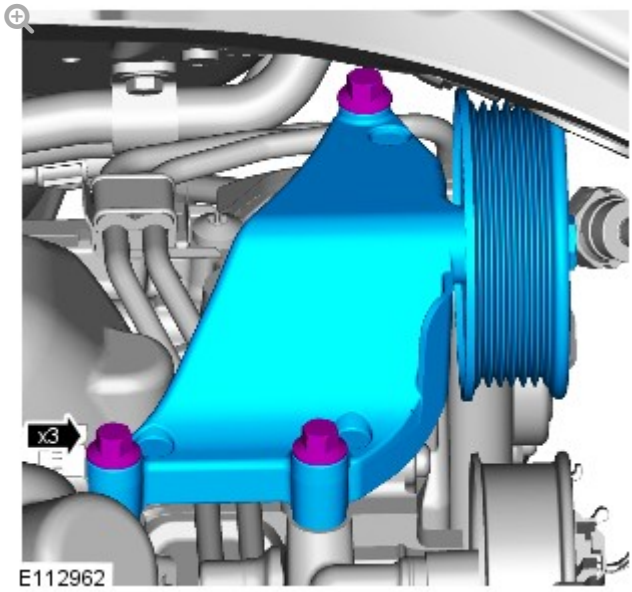

20.

NOTE:

Engine shown removed for clarity.

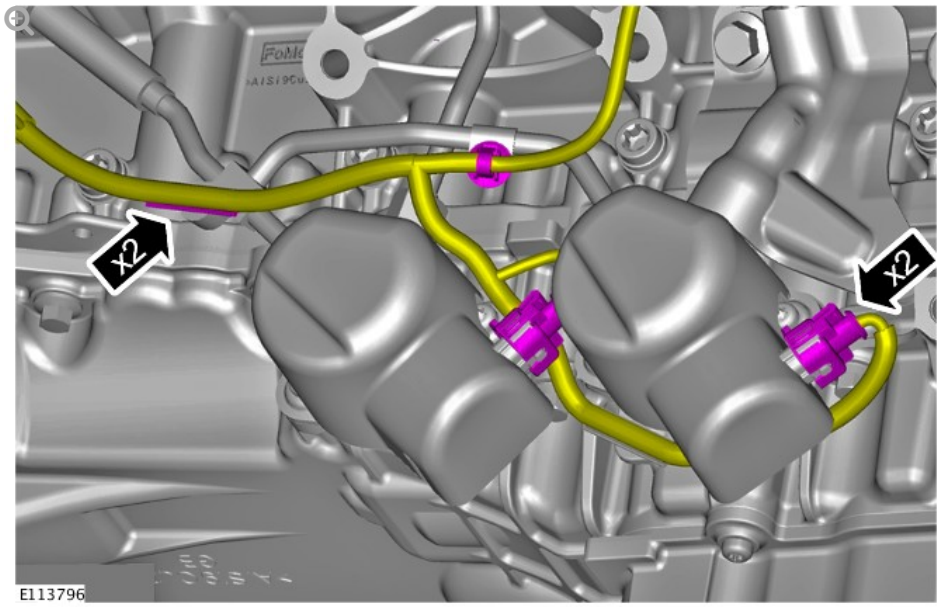

21.

CAUTIONS:

- Be prepared to collect escaping fluids.
- Make sure that all openings are sealed. Use new blanking caps.
- Remove and discard the high-pressure fuel supply lines.

NOTE:

Engine shown removed for clarity.

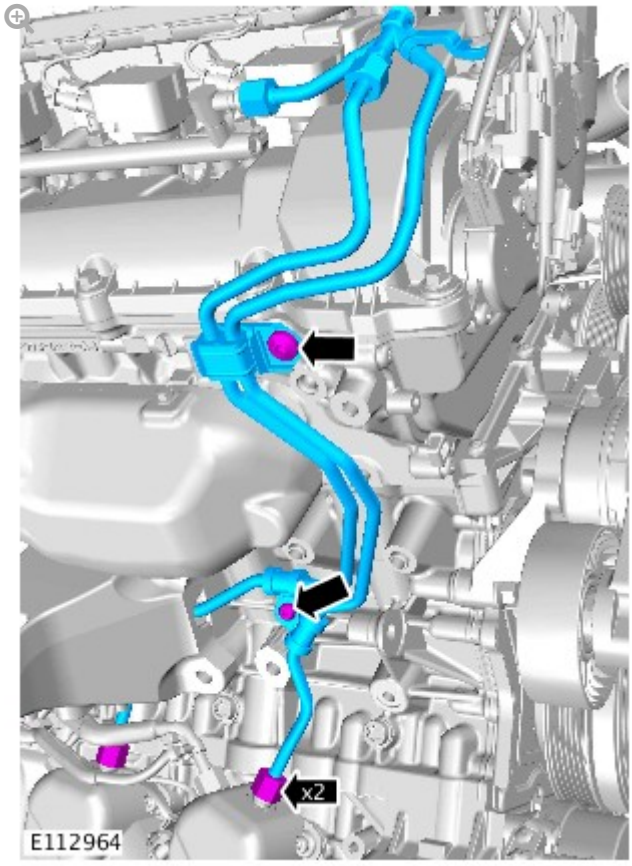

22.

CAUTIONS:

- Be prepared to collect escaping fluids.
- Make sure that all openings are sealed. Use new blanking caps.

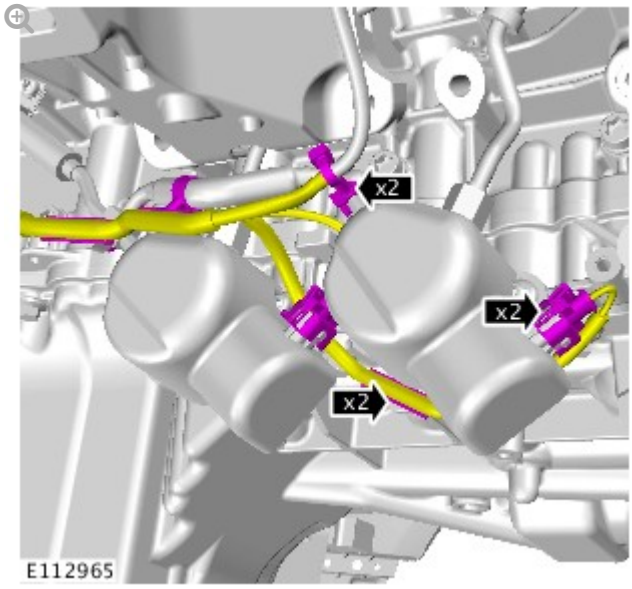

23.

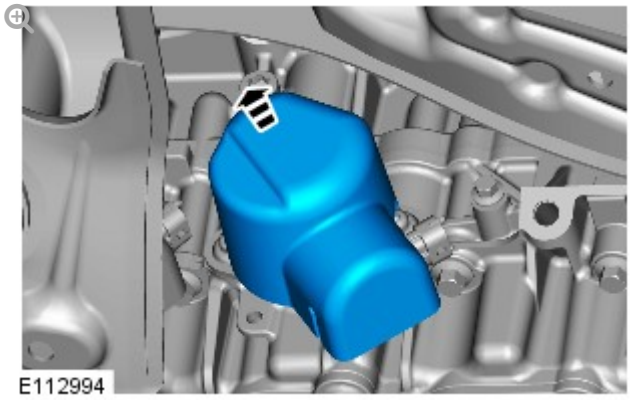

24.

CAUTION:

Be prepared to collect escaping fluids.

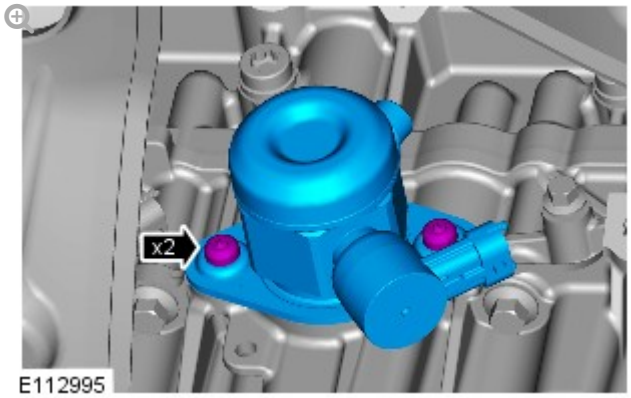

Loosen the Torx screws a turn each at a time.

25. **CAUTION:**

Be prepared to collect escaping fluids.

INSTALLATION

1. **NOTE:**

Lubricate the fuel rail high-pressure fuel pump bucket with clean engine oil.

2. **CAUTION:**

Tighten the Torx screws a turn at a time until the correct torque is achieved.

NOTE:

Lubricate the fuel rail high-pressure fuel pump O-ring seal with clean engine oil.

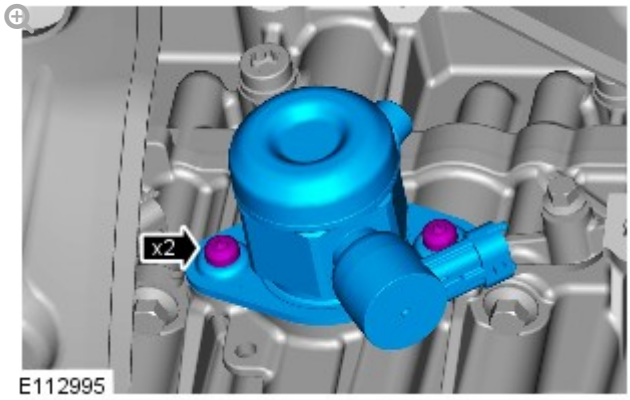

Torque: **11 Nm**

3.

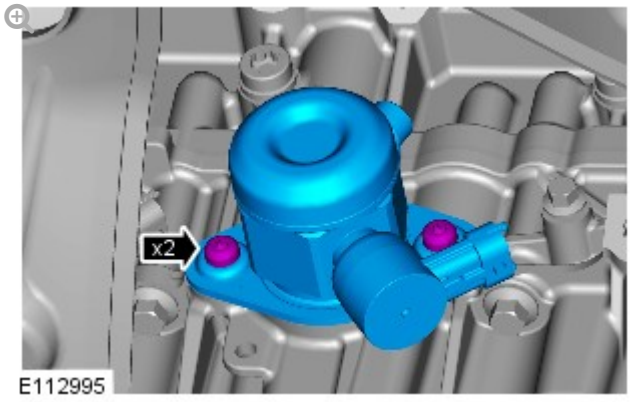

Loosen the Torx screws half a turn each.

4.

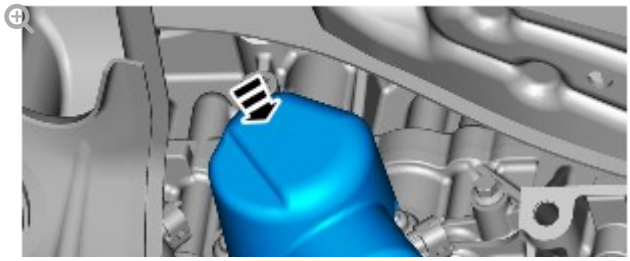

5.

CAUTIONS:

- Install new high-pressure fuel supply lines.
- Lubricate only the union threads with clean engine oil.

NOTES:

- Remove and discard the blanking caps.
- Engine shown removed for clarity.
- Install the bolt and unions fully finger tight before final tightening.

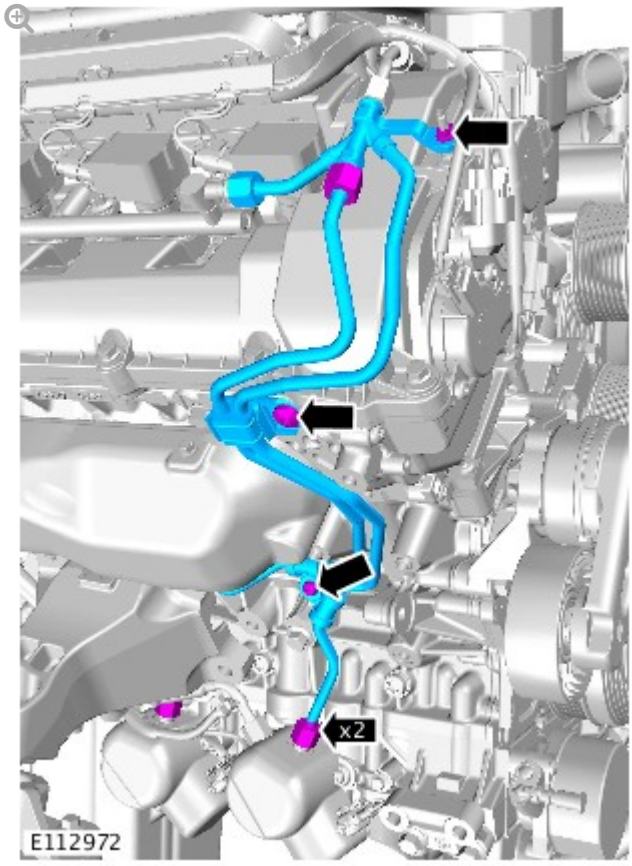

6. **CAUTION:**

> Care must be taken when positioning the fuel rail high-pressure fuel pump cover to one side.

NOTE:

> Fuel rail high-pressure fuel pump cover shown removed for clarity.

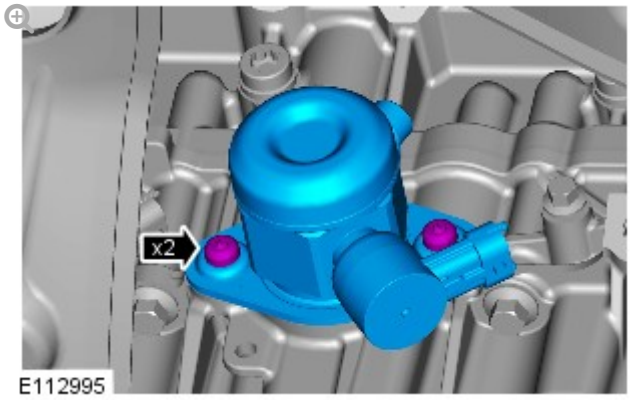

Torque: **11 Nm**

7. Lower the vehicle.

8. **NOTES:**

- Do not tighten at this stage.
- Remove and discard the blanking caps.

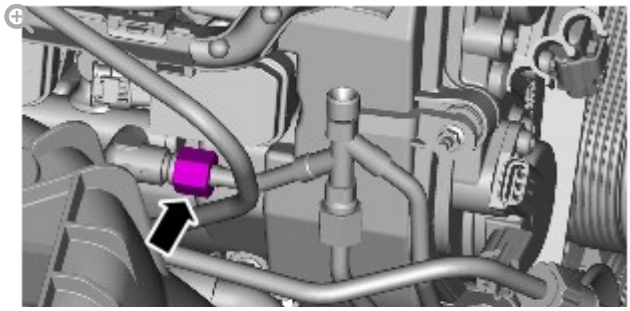

9. **WARNING:**

> Do not work on or under a vehicle supported only by a jack. Always support the vehicle on safety stands.

Raise and support the vehicle.

10. **NOTE:**

> Engine shown removed for clarity.

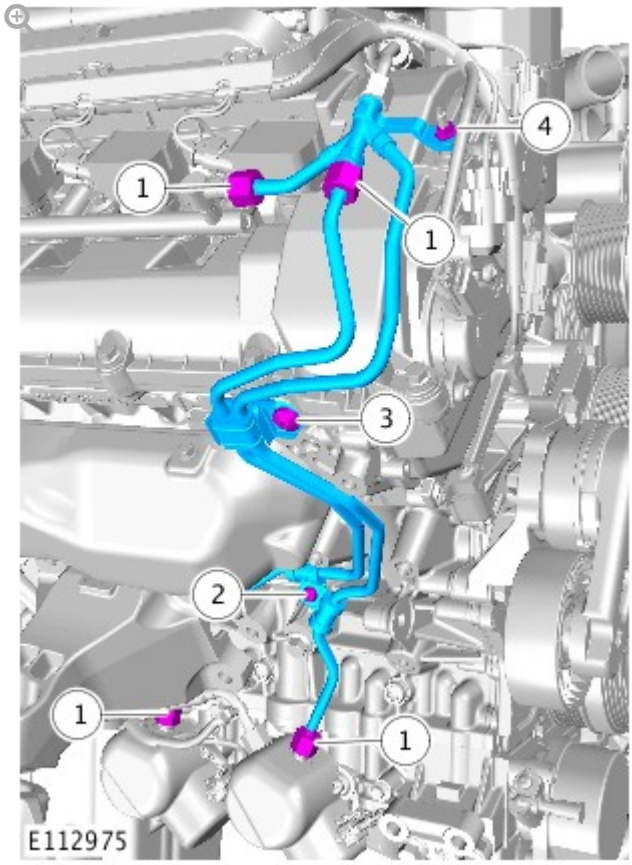

Torque:

Unions (1) **21 Nm**

M6 (2) **11 Nm**

M8 (3) **25 Nm**

M8 (3) **25 Nm**

M5 nut (4) **6 Nm**

11. **NOTE:**

Engine shown removed for clarity.

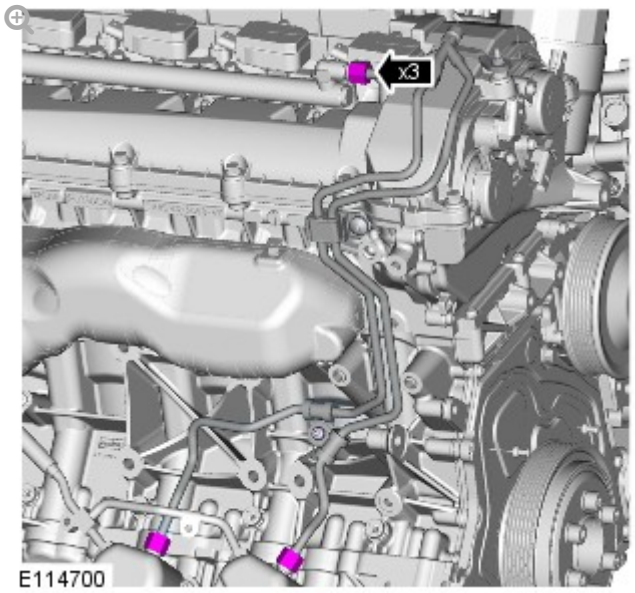

Torque: **21 Nm**

12. **NOTES:**

- Install the bolt and unions finger tight before final tightening.
- Remove and discard the blanking caps.

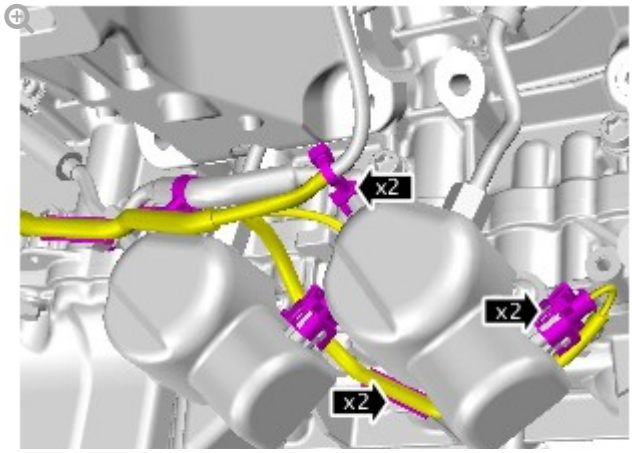

Torque:

Unions **21 Nm**

M6 **11 Nm**

13.

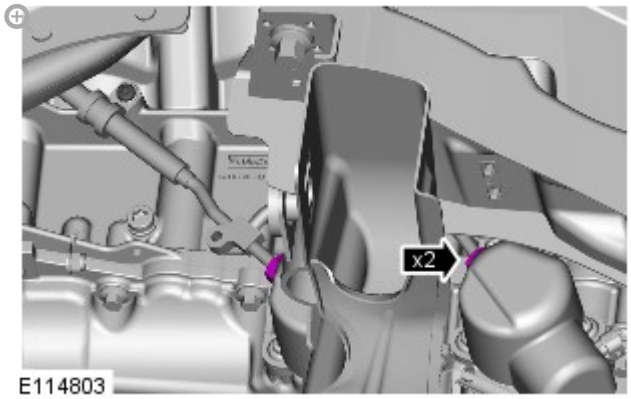

Torque: **21 Nm**

14.

NOTE:

Engine shown removed for clarity.

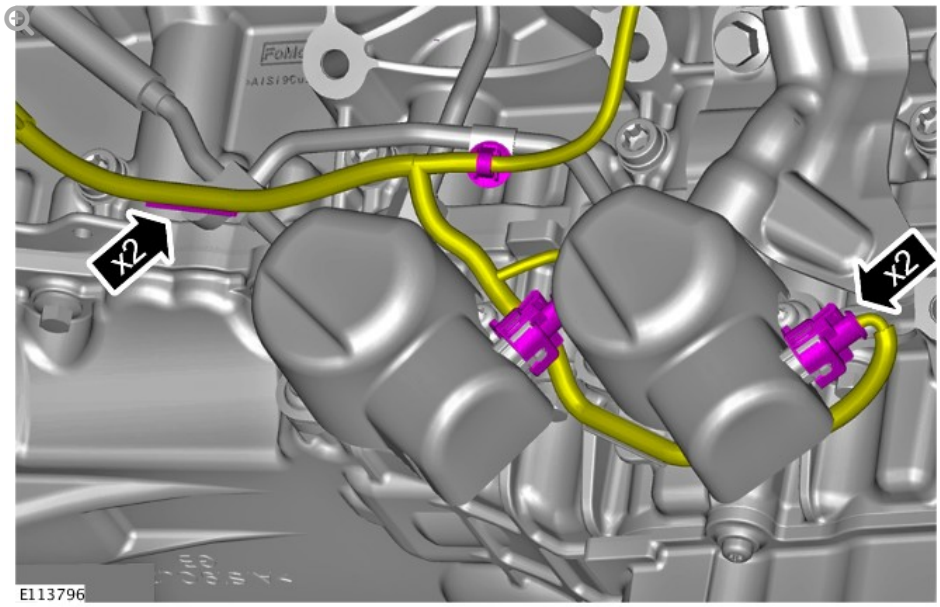

15.

15.

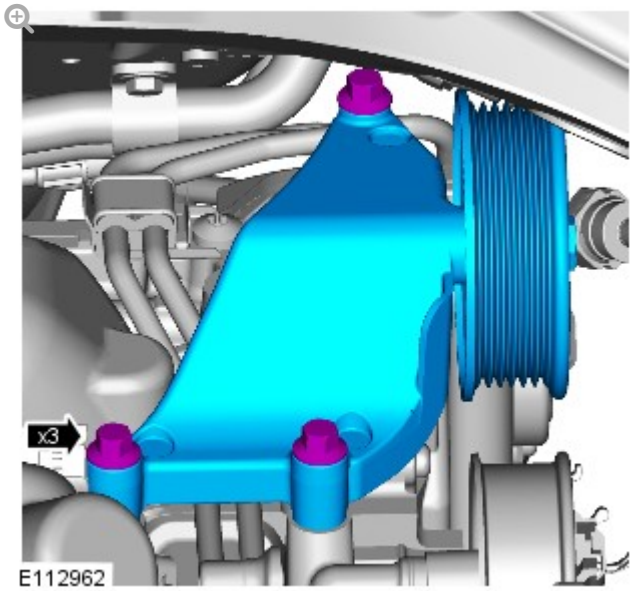

Torque: **25 Nm**

16. Refer to: Generator - V8 S/C 5.0L Petrol (414-02C Generator and Regulator - V8 5.0L Petrol/V8 S/C 5.0L Petrol, Removal and Installation).

17. Refer to: Engine Mount RH (303-01D Engine - V8 S/C 5.0L Petrol, Removal and Installation).

18. Lower the vehicle.

19.

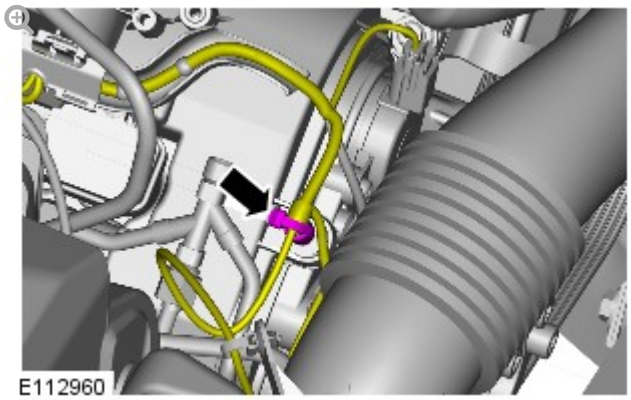

20. **CAUTION:**

> Lubricate only the union threads with clean engine oil.

NOTES:

- Do not tighten at this stage.
- Remove and discard the blanking caps.

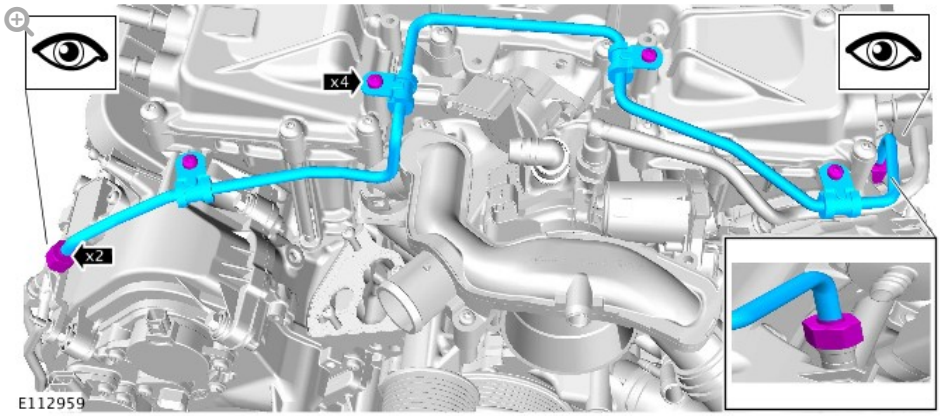

21.

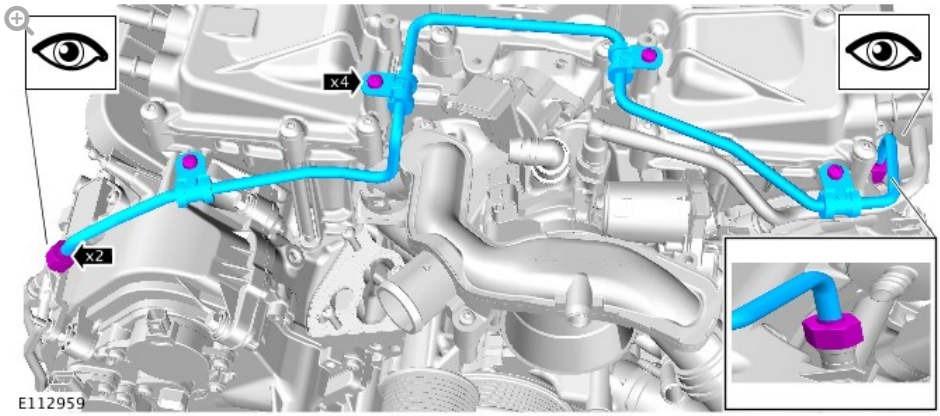

Torque:

Unions **21 Nm**

Bolts **8 Nm**

22.

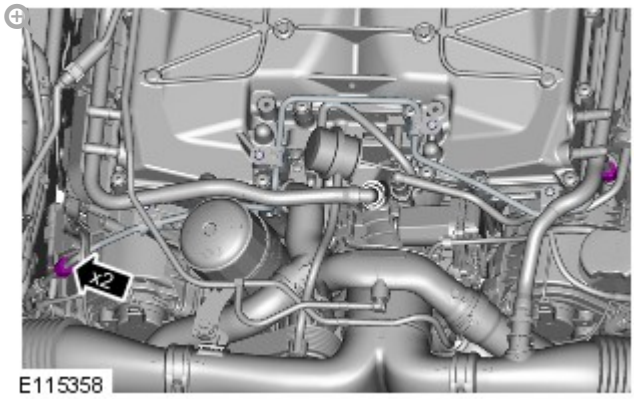

Torque: **21 Nm**

23.

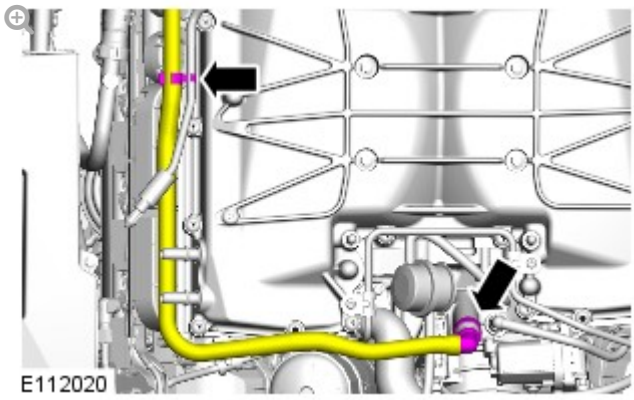

24.

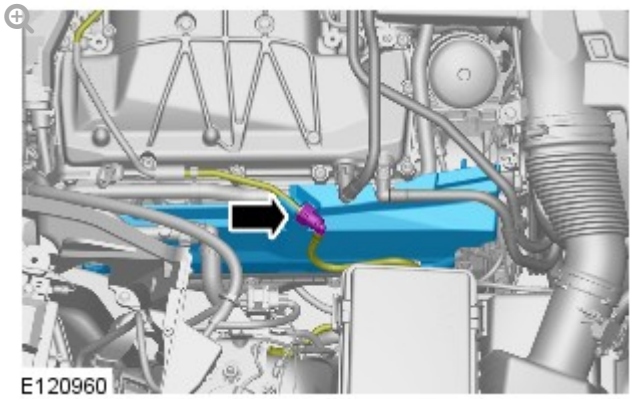

25.

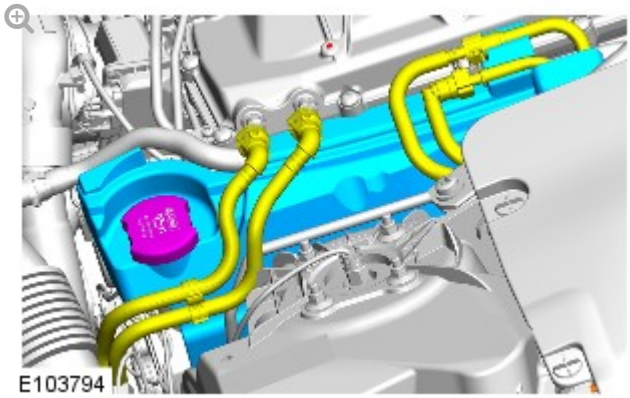

26.

CAUTION:

Be prepared to collect escaping coolant.

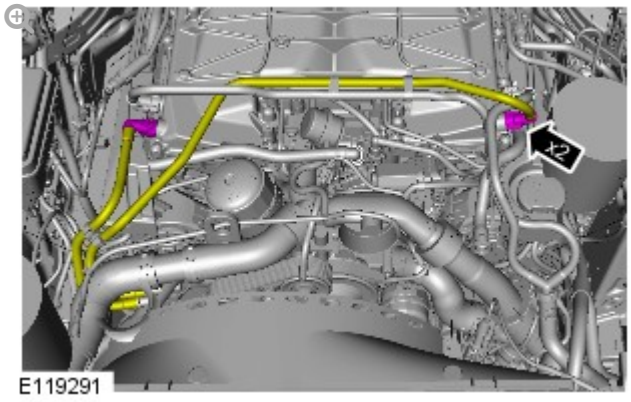

27.

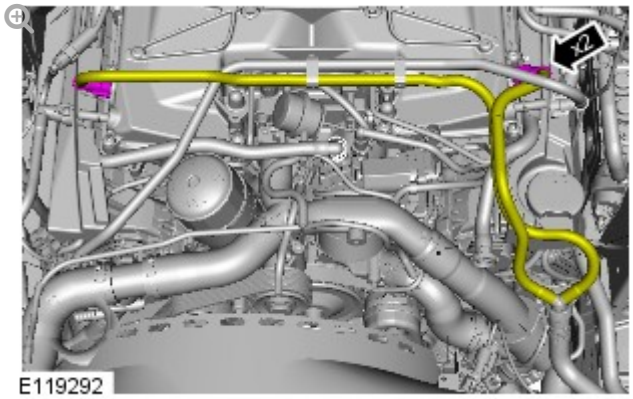

28. Refer to: Air Cleaner Outlet Pipe T-Connector (303-12D Intake Air Distribution and Filtering - V8 S/C 5.0L Petrol, Removal and Installation).

29. Refer to: Engine Undershield (501-02 Front End Body Panels, Removal and Installation).

30. Connect the battery earth lead.
Refer to: Specifications (414-00 Battery and Charging System - General Information, Specifications).

31.
- Start the engine and allow to run for 10 minutes, stop the engine.
- Check for leaks.

32. **CAUTIONS:**

- Make sure that the selector lever and the gearshift

mechanism are in the park (P) position.

- Make sure that the hood is open.

- Turn the ignition on.

33.

E122817

- Press the right-hand directional button to access the instrument cluster menu.

34.

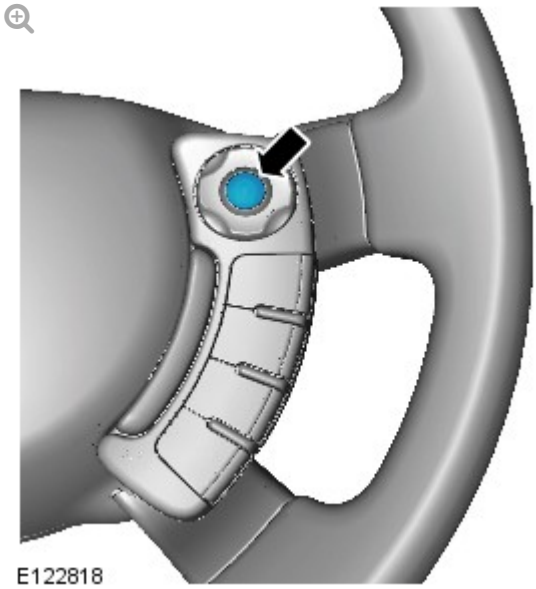

E122818

- Press the right-hand OK button.

35.

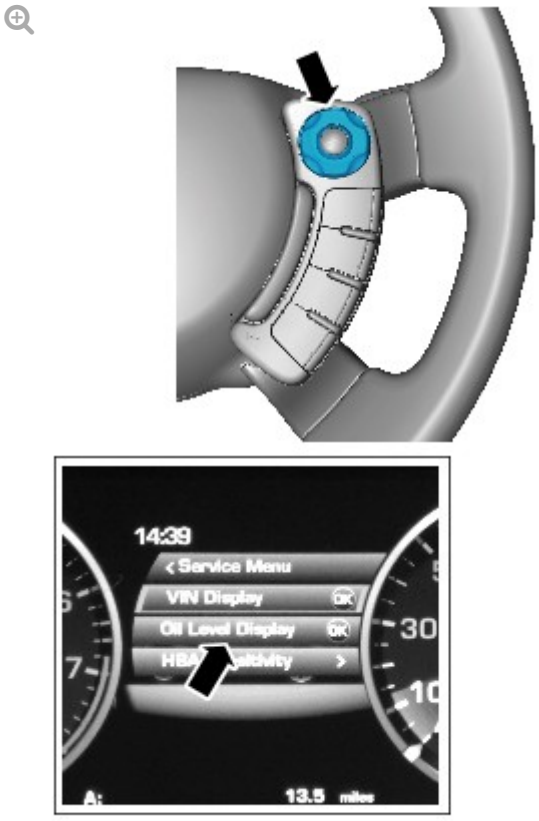

E122819

- Press the right-hand directional button to access the Oil Level Display.

36.

E122820

- Press the right-hand OK button and follow the instructions.

37.

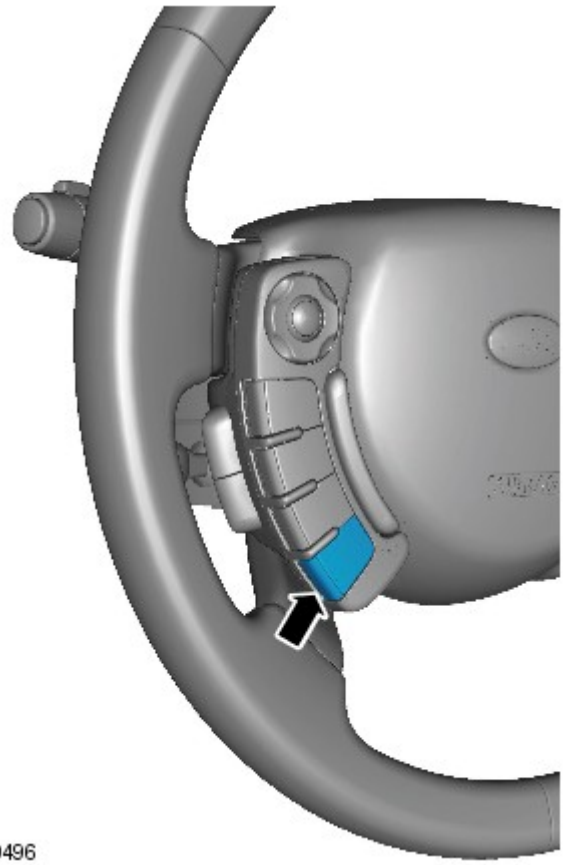

E119496

- Press the cruise control cancel button twice within 2 seconds.

38.

E122821

- The message center display will revert to the normal display in the trip computer.
- Press the right-hand OK button and follow the instructions.
- Check that the oil level display shows an oil level reading.
- Only after having started and run the engine for 10 minutes (as indicated in Step 31), switch off the engine, then stabilizing for 10 minutes, take a reading from the oil level display and, if necessary top up with engine oil.

39. Turn the ignition off.

40. Allow 10 minutes for the engine oil level to stabilize if there has been additional oil top up.

41. **NOTE:**

The following steps are to update the average oil level value.

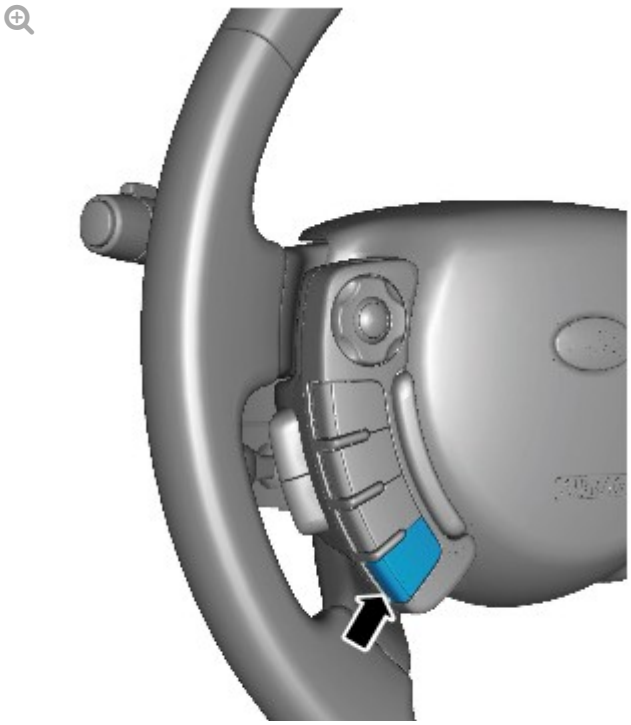

E119496

- Turn the ignition on.
- Press and hold the cruise control cancel button for more than 2 seconds.

42.
- The message center display will revert to the normal display in the trip computer.

43. Turn the ignition off.

44. Turn the ignition on.

45.

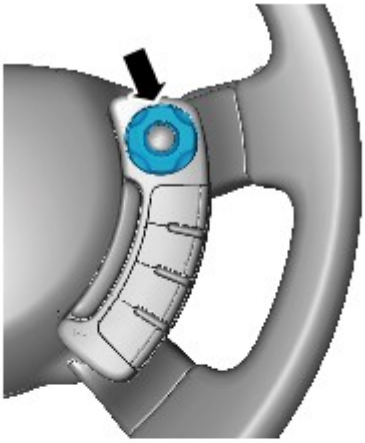

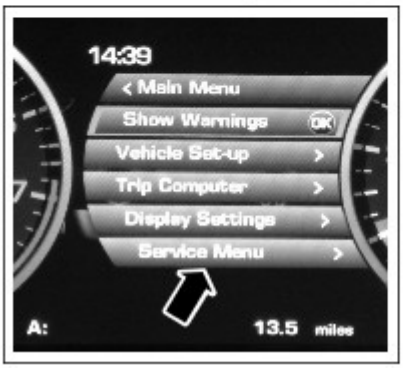

E122817

- Press the right-hand directional button to access the instrument cluster menu.

46.

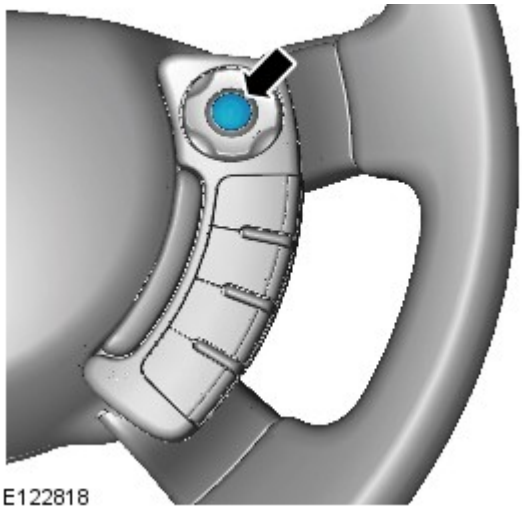

E122818

- Press the right-hand OK button.

47.

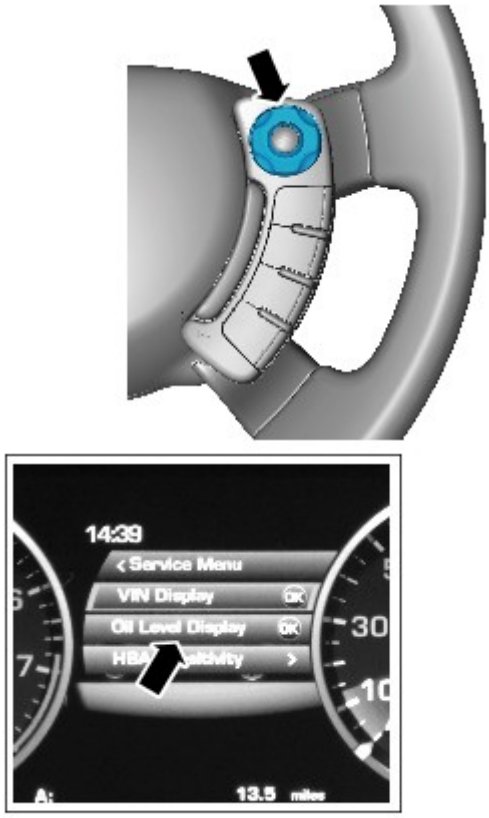

E122819

- Press the right-hand directional button to access the Oil Level Display.

48.

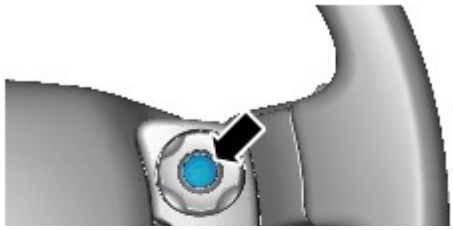

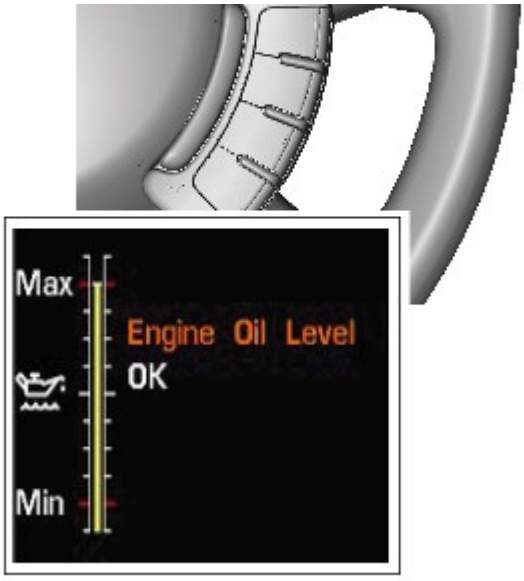

E122821

- Press the right-hand OK button and follow the instructions.
- Make sure that the average oil level value has now been updated.

49. Refer to: Engine Cover - V8 5.0L Petrol/V8 S/C 5.0L Petrol (501-05 Interior Trim and Ornamentation, Removal and Installation).

2012.0 RANGE ROVER (LM), 303-04

FUEL CHARGING AND CONTROLS - V8 S/C 5.0L PETROL

THROTTLE BODY (G1224058)

REMOVAL AND INSTALLATION

19.22.45	THROTTLE BODY - RENEW	5000 CC, AJ V8, SUPERCHARGED	1.3	USED WITHINS	+

REMOVAL

NOTE:

Removal steps in this procedure may contain installation details.

1. Disconnect the battery ground cable.
   Refer to: Specifications (414-00 Battery and Charging System - General Information, Specifications).

2. **WARNING:**

   Make sure to support the vehicle with axle stands.

   Raise and support the vehicle.

3. Refer to: Engine Cover - V8 5.0L Petrol/V8 S/C 5.0L Petrol (501-05 Interior Trim and Ornamentation, Removal and Installation).

4. Refer to: Cooling System Partial Draining and Vacuum Filling (303-03B Engine Cooling - TDV8 4.4L Diesel, General Procedures).

5. Refer to: Air Cleaner Outlet Pipe T-Connector (303-12D Intake Air Distribution and Filtering - V8 S/C 5.0L Petrol, Removal and Installation).

6. 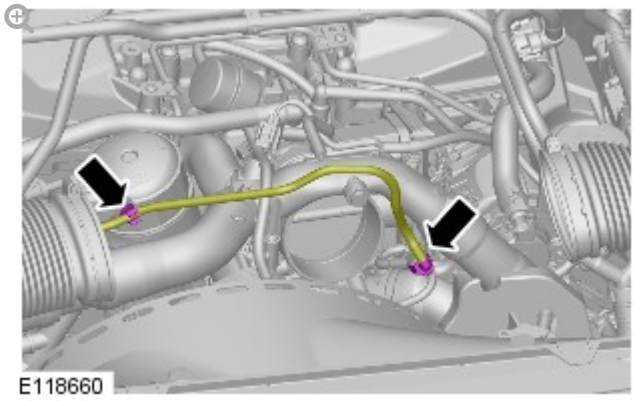

7. 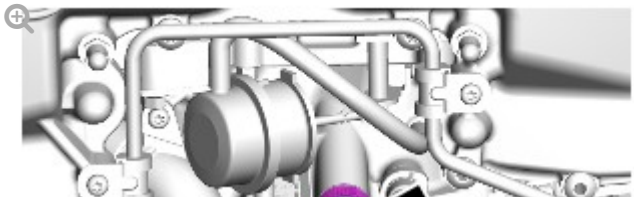

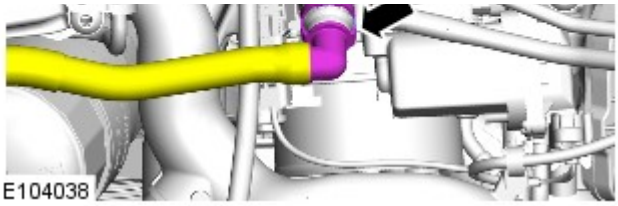

8.

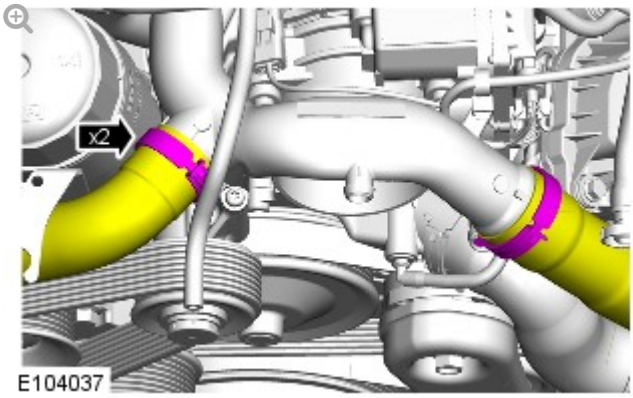

9.

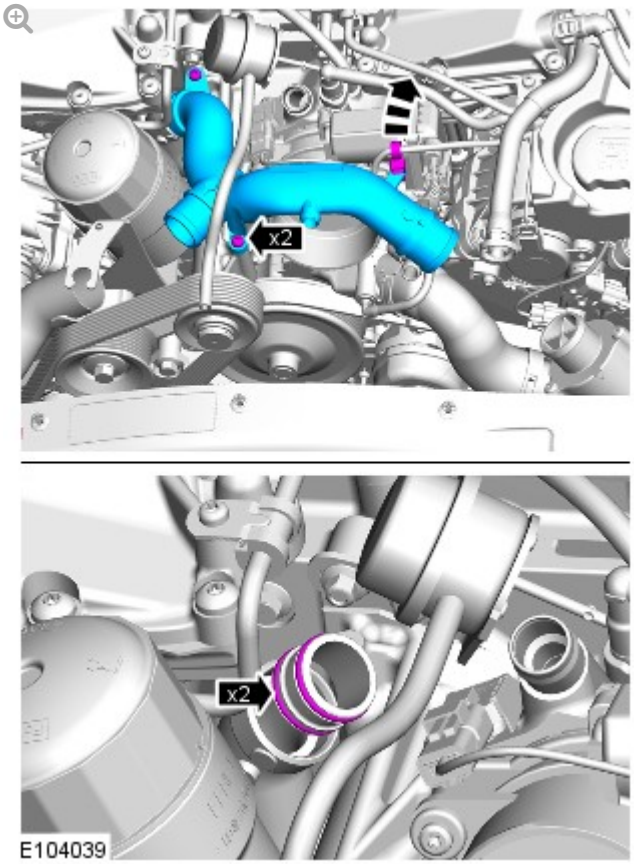

Torque: **10 Nm**

10.

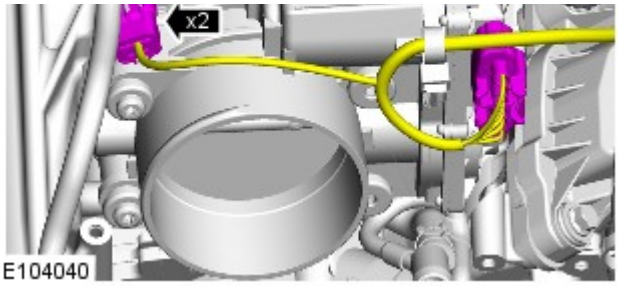

11.

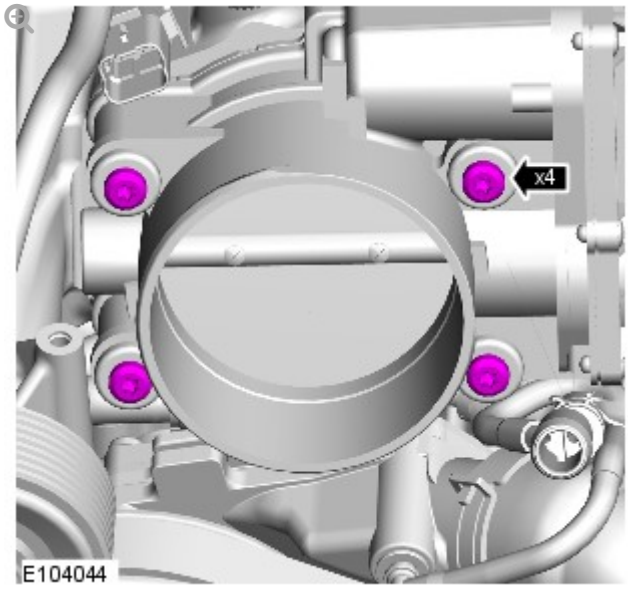

Torque: **10 Nm**

12.

CAUTIONS:

- Do not attempt to clean the throttle body bore, build up of deposits reduces air leakage past the throttle plate at the fully closed position.
- Take extra care when removing the throttle body, failure to follow this instruction may result in damage to the manifold absolute pressure (MAP) sensor.

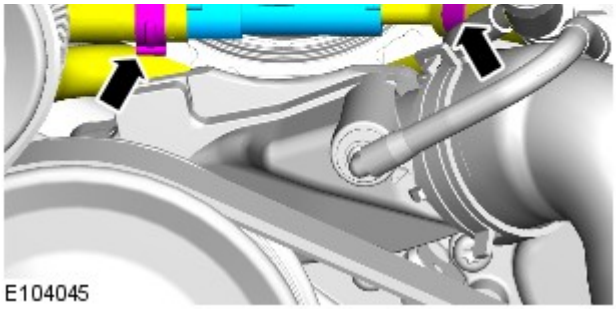

- Remove and discard the gasket.
- Install a new gasket.
- Clean the components mating faces.

INSTALLATION

1. To install, reverse the removal procedure.
2. Using the approved diagnostic equipment, clear the powertrain control module (PCM) adaptions.

ACCESSORY DRIVE – V8 5.0L PETROL/V8 S/C 5.0L PETROL

SPECIFICATIONS

DESCRIPTION	NM	LB-FT	LB-IN
Accessory drive belt tensioner retaining bolt	47	35	-
Accessory drive belt idler pulley retaining bolt - all vehicles	47	35	-
Accessory drive belt center idler pulley retaining bolt - vehicles without supercharger	47	35	-
Accessory drive belt idler pulley retaining bolt to tensioner bracket - vehicles with supercharger	47	35	-
Supercharger belt tensioner bracket retaining bolt	25	19	-
Supercharger belt tensioner retaining bolt	47	35	-
Supercharger belt idler pulley retaining bolt	47	35	-
Cooling fan pulley retaining bolts	25	19	
Cooling fan retaining nut	65	48	

2012.0 RANGE ROVER (LM), 303-05

ACCESSORY DRIVE – V8 5.0L

ACCESSORY DRIVE – V8 5.0L PETROL/V8 S/C 5.0L PETROL

DESCRIPTION AND OPERATION

COMPONENT LOCATION – NATURALLY ASPIRATED VEHICLES

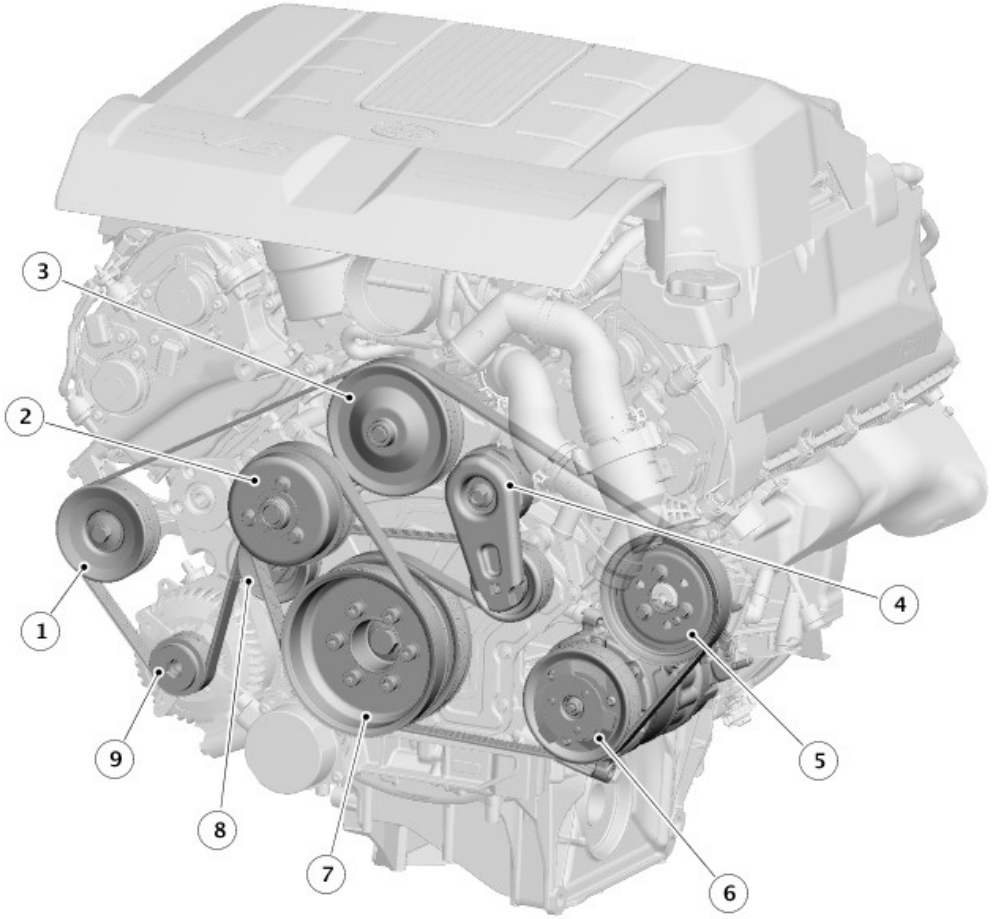

E121125

ITEM	DESCRIPTION
1	Idler pulley
2	Viscous cooling fan pulley
3	Coolant pump

4	Belt tensioner
5	Power steering pump
6	A/C (air conditioning) compressor
7	Crankshaft pulley/torsional vibration damper
8	Idler pulley
9	Generator

COMPONENT LOCATION – SUPERCHARGED VEHICLES

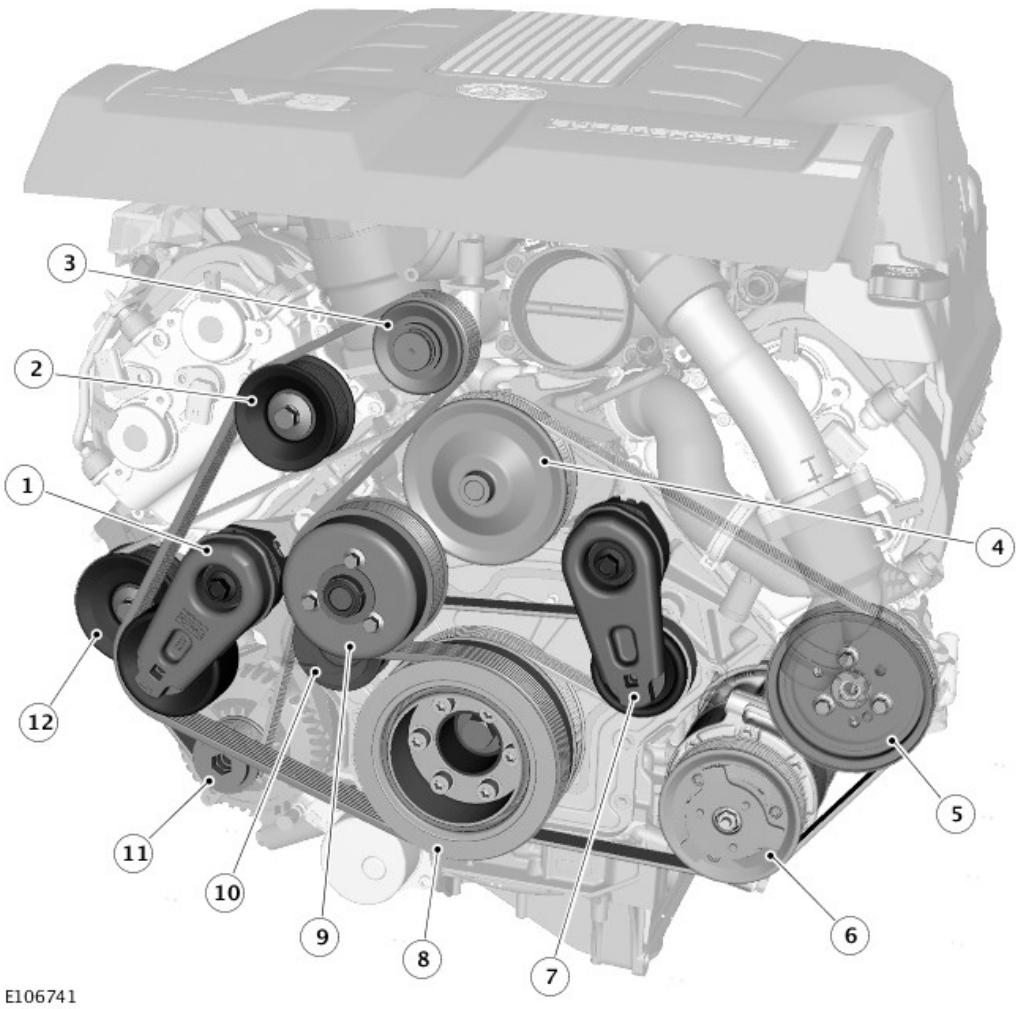

ITEM	DESCRIPTION
1	Secondary belt tensioner
2	Idler pulley
3	Supercharger

4	Coolant pump
5	Power steering pump
6	A/C compressor
7	Primary belt tensioner
8	Crankshaft pulley/torsional vibration damper
9	Viscous cooling fan pulley
10	Idler pulley
11	Generator
12	Idler pulley

INTRODUCTION

The accessory drive is a belt system powered by a pulley attached to the front of the crankshaft. The crankshaft pulley, which incorporates a torsional vibration damper, drives primary and secondary drive belts. An automatic belt tensioner in each belt run maintains the drive belts at the correct tension. Together with idler pulleys, the belt tensioners also guide the drive belts clear of obstructions and set the correct 'wrap-around' of the accessory component drive pulleys to ensure a slip-free drive.

PRIMARY DRIVE BELT

The primary drive belt is a six-ribbed poly-V belt that drives the:

- Coolant pump
- Power steering pump
- A/C (air conditioning) compressor
- Generator.

SECONDARY DRIVE BELT

The secondary drive belt is an eight-ribbed poly-V belt that drives the pulley of the viscous cooling fan. On SC (supercharger) vehicles, the secondary drive belt also drives the SC.

BELT TENSIONERS

Each belt tensioner consists of an idler pulley on the end of a spring loaded

pivot arm. The pivot arm can be turned for removal and installation of the belt.

Each belt tensioner is calibrated to automatically maintain the correct tension in the related drive belt.

2012.0 RANGE ROVER (LM), 303-05

ACCESSORY DRIVE – V8 5.0L PETROL/V8 S/C 5.0L PETROL

DIAGNOSIS AND TESTING

PRINCIPLES OF OPERATION

For a detailed description of the Accessory Drive Belts, refer to the relevant Description and Operation section in the workshop manual. REFER to:

Accessory Drive Belt - V8 S/C 5.0L Petrol (303-05C Accessory Drive - V8 5.0L Petrol/V8 S/C 5.0L Petrol, Removal and Installation).

INSPECTION AND VERIFICATION

CAUTION:

Diagnosis by substitution from a donor vehicle is **NOT** acceptable. Substitution of control modules does not guarantee confirmation of a fault, and may also cause additional faults in the vehicle being tested and/or the donor vehicle.

NOTES:

- If a control module or a component is suspect and the vehicle remains under manufacturer warranty, refer to the Warranty Policy and Procedures manual, or determine if any prior approval programme is in operation, prior to the installation of a new module/component.
- When performing voltage or resistance tests, always use a digital multimeter accurate to three decimal places, and with an up-to-date calibration certificate. When testing resistance always take the resistance of the digital multimeter leads into account.
- Check and rectify basic faults before beginning diagnostic routines involving pinpoint tests.

1. Verify the customer concern

1. Visually inspect for obvious signs of damage and system integrity

Visual Inspection

MECHANICAL
▪ Accessory drive belt ▪ Belt tensioner

- Idler pulley
- Generator
- Coolant pump
- Air conditioning compressor
- Torsional vibration damper

1. If an obvious cause for an observed or reported concern is found, correct the cause (if possible) before proceeding to the next step

1. If the cause is not visually evident, verify the symptom and refer to the Symptom Chart, alternatively check for Diagnostic Trouble Codes (DTCs) and refer to the DTC Index

1. Check DDW for open campaigns. Refer to the corresponding bulletins and SSMs which may be valid for the specific customer complaint and carry out the recommendations as required

SYMPTOM CHART

CAUTION:

If the engine is run without the drive belt(s) connected to eliminate driven components, diagnostic trouble codes, (DTCs) may be set which must be cleared before the vehicle is returned to the owner. The engine should not be run for more than 2-3 minutes with the belts disconnected. Failure to follow this instruction may result in damage to the vehicle

SYMPTOM	POSSIBLE CAUSES	ACTION
Noise	▪ Accessory drive belt condition and tension ▪ Pulleys misaligned ▪ Driven components (including tensioners)	▪ Check the integrity of the accessory drive belt. Rectify as necessary ▪ Check the alignment of the accessory drive belt pulleys. Rectify as necessary ▪ Check the integrity of the driven components. Rectify as necessary

Accessory drive belt does not hold tension	▪ Accessory drive belt wear ▪ Belt tensioner failure	▪ Check the integrity of the accessory drive belt. Rectify as necessary ▪ Check the integrity of the belt tensioner. Rectify as necessary

DTC INDEX

For a list of Diagnostic Trouble Codes (DTCs) that could be logged on this vehicle, please refer to Section 100-00. REFER to: Diagnostic Trouble Code (DTC) Index - V8 5.0L Petrol/V8 S/C 5.0L Petrol (100-00 General Information, Description and Operation).

2012.0 RANGE ROVER (LM), 303-05

ACCESSORY DRIVE – V8 5.0L PETROL/V8 S/C 5.0L PETROL

ACCESSORY DRIVE BELT – V8 S/C 5.0L PETROL (G1226053)

REMOVAL AND INSTALLATION

86.10.03	DRIVE BELT – GENERATOR – RENEW	5000 CC, AJ V8, SUPERCHARGED	1	USED WITHINS	+

SPECIAL TOOL(S)

303-1142

Viscous Coupling Wrench

303-1143

Viscous Coupling Holding Tool

REMOVAL

NOTES:

- Some variation in the illustrations may occur, but the essential information is always correct.
- Removal steps in this procedure may contain installation details.

1. Disconnect the battery ground cable.
   Refer to: Specifications (414-00, Specifications).

2. **WARNING:**

   Make sure to support the vehicle with axle stands.

   Raise and support the vehicle.

3. Refer to: Supercharger Belt (303-05, Removal and Installation).

4. **CAUTION:**

   Always protect the cooling pack elements to prevent

accidental damage.

NOTES:

- The thread is right handed.
- Some variation in the illustrations may occur, but the essential information is always correct.

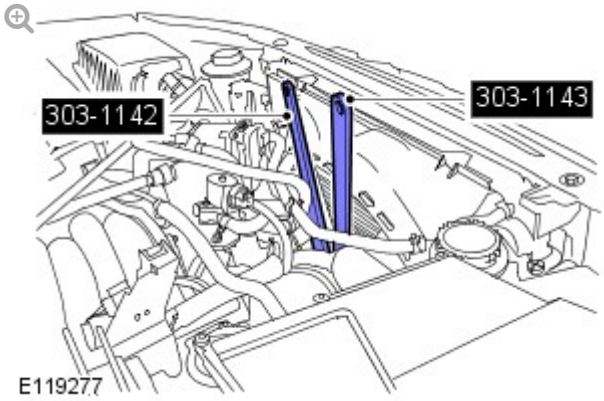

- *Special Tool(s):* 303-1142
- *Special Tool(s):* 303-1143

5.

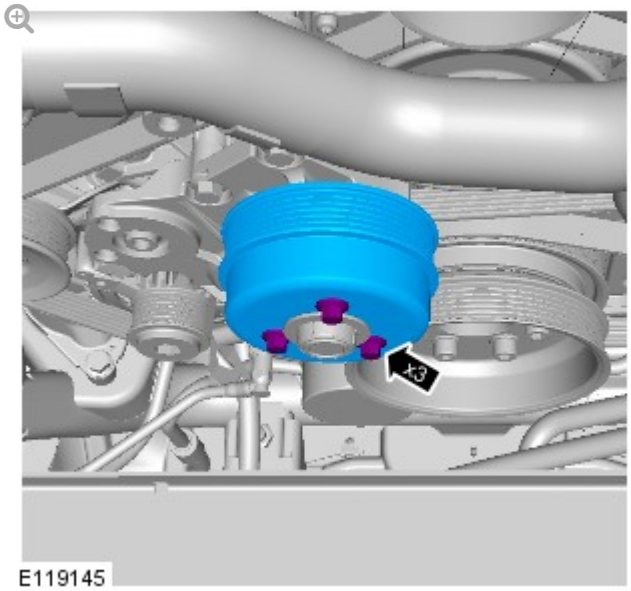

6.

NOTE:

Note the fitted position.

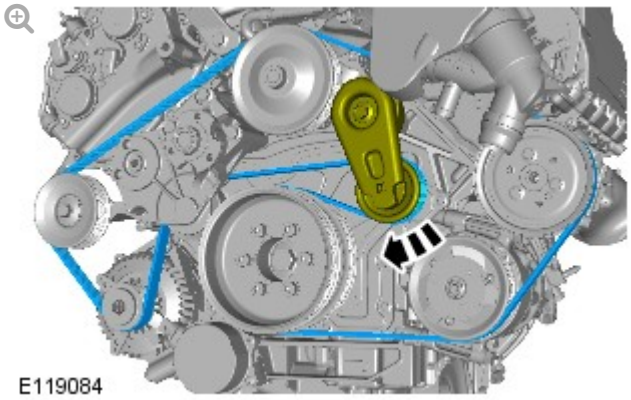

7.

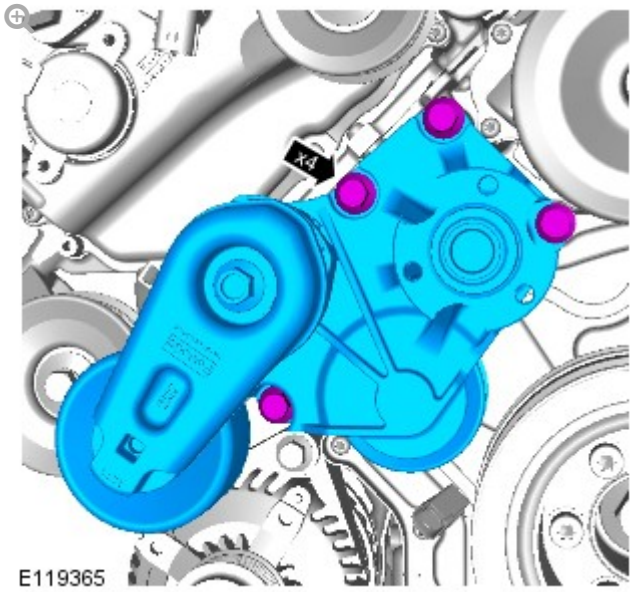

INSTALLATION

1.

Torque: **25 Nm**

2. **NOTE:**

Note the fitted position.

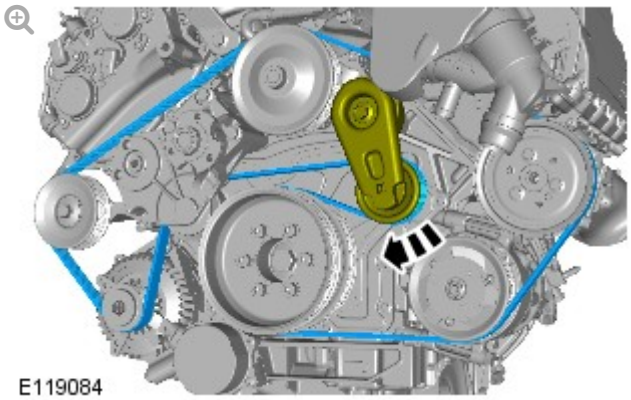

3.

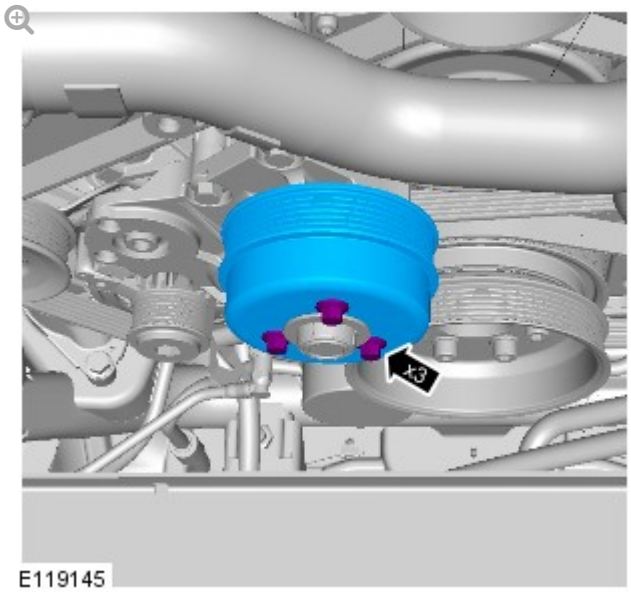

Torque: **25 Nm**

4.

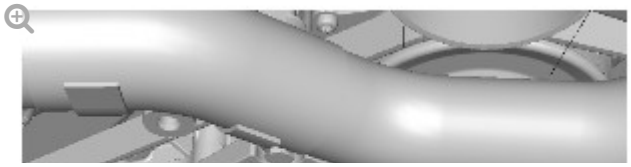

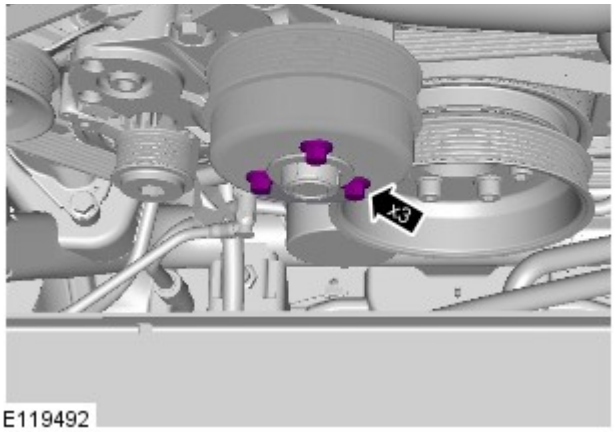

Torque: **25 Nm**

5. **CAUTION:**

Always protect the cooling pack elements to prevent accidental damage.

NOTES:

- The thread is right handed.
- Some variation in the illustrations may occur, but the essential information is always correct.

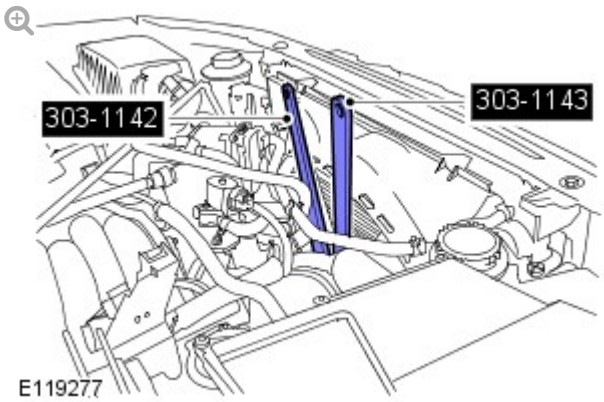

- Install the cooling fan.
- *Torque:* **65 Nm**
- *Special Tool(s):* 303-1142

- *Special Tool(s):* 303-1143

6. Refer to: Supercharger Belt (303-05, Removal and Installation).

7. Connect the battery ground cable.
   Refer to: Specifications (414-00, Specifications).

ACCESSORY DRIVE – V8 5.0L PETROL/V8 S/C 5.0L PETROL

ACCESSORY DRIVE BELT IDLER PULLEY (G1224661)

REMOVAL AND INSTALLATION

86.10.23	JOCKEY PULLEY – GENERATOR DRIVE BELT – RENEW	5000 CC, AJ V8, SUPERCHARGED	0.3	USED WITHINS	+
86.10.23	JOCKEY PULLEY – GENERATOR DRIVE BELT – RENEW	AJ V8, SUPERCHARGED	1.4	USED WITHINS	+

REMOVAL

NOTES:

- Some variation in the illustrations may occur, but the essential information is always correct.
- Removal steps in this procedure may contain installation details.

1. Disconnect the battery ground cable.
   Refer to: Specifications - Armoured (414-00 Battery and Charging System - General Information, Specifications).

2. Refer to: Air Cleaner Outlet Pipe T-Connector (303-12C Intake Air Distribution and Filtering - V8 5.0L Petrol, Removal and Installation).

3. Refer to: Air Cleaner Outlet Pipe T-Connector (303-12D Intake Air Distribution and Filtering - V8 S/C 5.0L Petrol, Removal and Installation).

4.

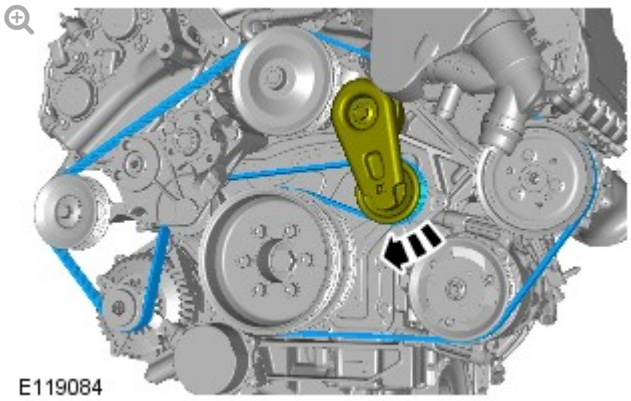

5.

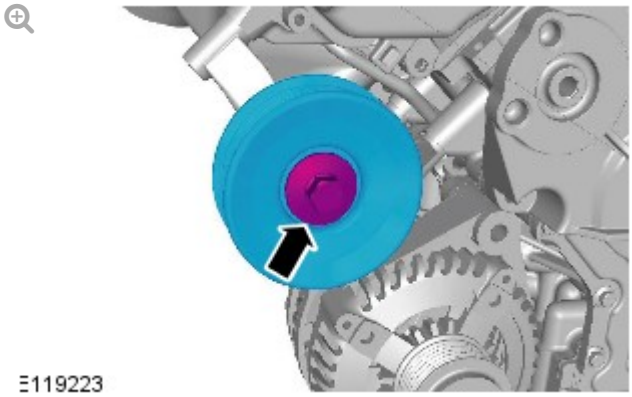

Torque: **47 Nm**

INSTALLATION

1. To install, reverse the removal procedure.

2012.0 RANGE ROVER (LM), 303-05

ACCESSORY DRIVE – V8 5.0L PETROL/V8 S/C 5.0L PETROL

ACCESSORY DRIVE BELT TENSIONER – V8 S/C 5.0L PETROL (G1224664)

REMOVAL AND INSTALLATION

TENSIONER

86.10.06	– GENERATOR DRIVE BELT – RENEW	5000 CC, AJ V8, SUPERCHARGED	0.3	USED WITHINS	+

REMOVAL

NOTES:

- Some variation in the illustrations may occur, but the essential information is always correct.
- Removal steps in this procedure may contain installation details.

1. Disconnect the battery ground cable.
   Refer to: Specifications - Armoured (414-00 Battery and Charging System - General Information, Specifications).

2. Refer to: Air Cleaner Outlet Pipe T-Connector (303-12D Intake Air Distribution and Filtering - V8 S/C 5.0L Petrol, Removal and Installation).

3. 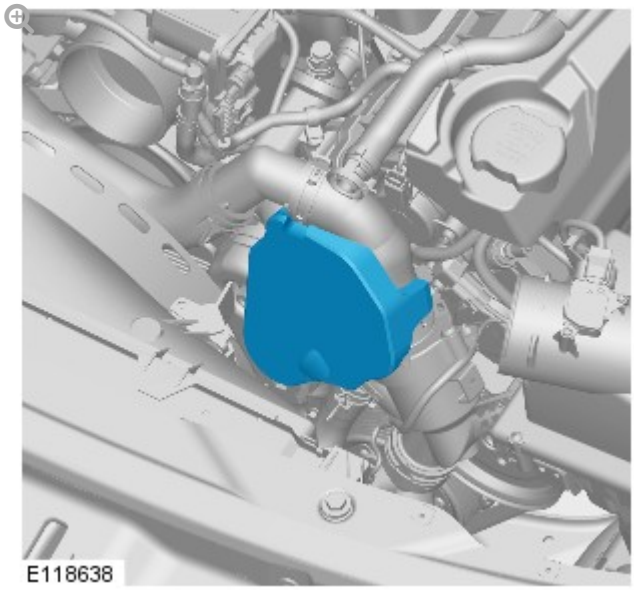

4. **NOTE:**

   Note the fitted position.

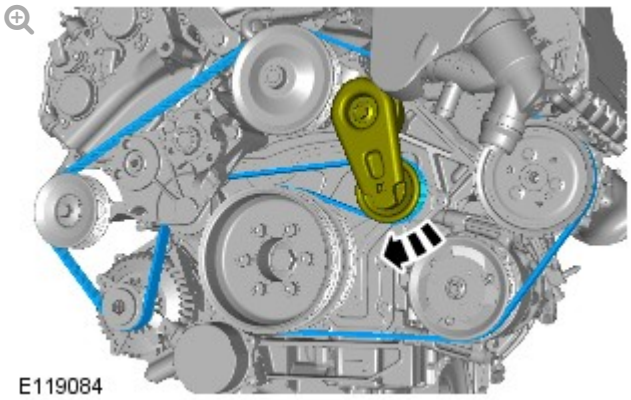

5.

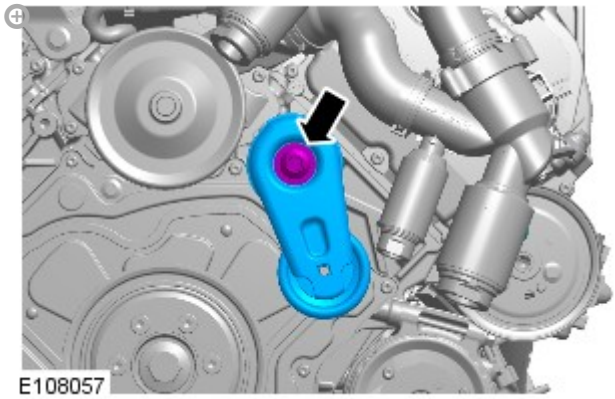

Torque: **47 Nm**

INSTALLATION

1. To install, reverse the removal procedure.

2012.0 RANGE ROVER (LM), 303-05

ACCESSORY DRIVE – V8 5.0L PETROL/V8 S/C 5.0L PETROL

COOLING FAN BELT (G1224829)

REMOVAL AND INSTALLATION

26.25.01	BELT – VISCOUS FAN – RENEW	5000 CC, AJ V8, SUPERCHARGED	0.7	USED WITHINS	+

SPECIAL TOOL(S)

303-1142

Viscous Coupling Wrench

303-1143

Viscous Coupling Holding Tool

303-1500

Installer, Stretchy Belt

REMOVAL

1. Disconnect the battery ground cable.
   Refer to: Specifications (414-00, Specifications).

2. Refer to: Air Cleaner Outlet Pipe T-Connector (303-12, Removal and Installation).

3. **CAUTION:**

   Always protect the cooling pack elements to prevent accidental damage.

   NOTE:

Some variation in the illustrations may occur, but the essential information is always correct.

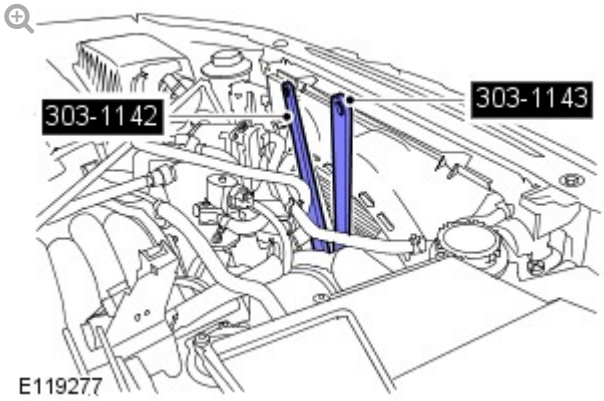

- *Special Tool(s):* 303-1142
- *Special Tool(s):* 303-1143

4.

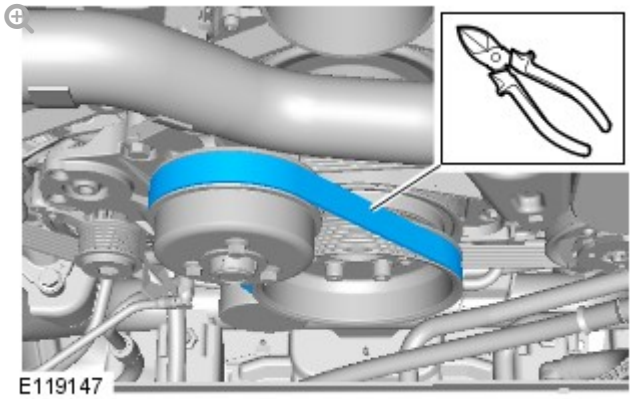

INSTALLATION

1.

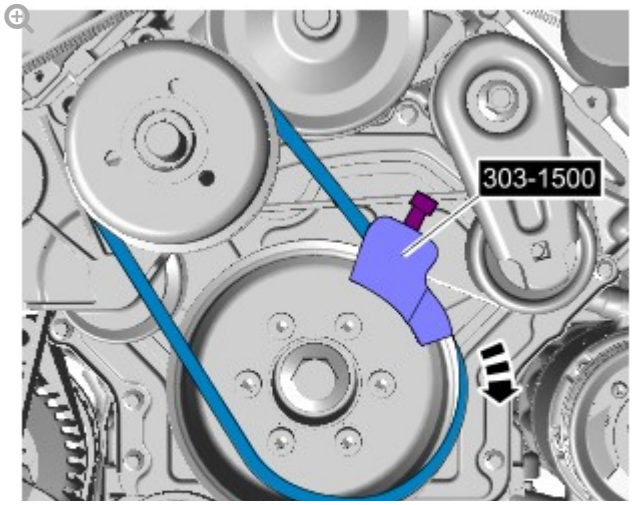

- Install the cooling fan belt.
- *Special Tool(s):* 303-1500

2.
- Whilst rotating the engine, make sure that pressure is applied to the left hand side of the cooling fan belt to aid installation.
- Rotate the engine until the special tool has reached the 9 o clock position.

3. Remove the special tool.

4. Rotate the engine clockwise twice, making sure that the belt is seated on both pulleys correctly.

5.

CAUTION:

Always protect the cooling pack elements to prevent accidental damage.

NOTE:

Some variation in the illustrations may occur, but the essential information is always correct.

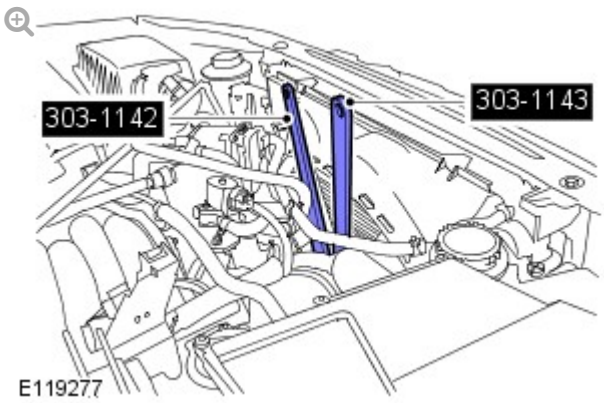

- *Torque:* **65 Nm**
- *Special Tool(s):* 303-1142
- *Special Tool(s):* 303-1143

6. Refer to: Air Cleaner Outlet Pipe T-Connector (303-12, Removal and Installation).

7. Connect the battery ground cable.
   Refer to: Specifications (414-00, Specifications).

ACCESSORY DRIVE – V8 5.0L PETROL/V8 S/C 5.0L PETROL

SUPERCHARGER BELT (G1224509)

REMOVAL AND INSTALLATION

26.25.01	BELT – VISCOUS FAN – RENEW	5000 CC, AJ V8, SUPERCHARGED	0.7	USED WITHINS	+

REMOVAL

1. Disconnect the battery ground cable.
   Refer to: Specifications (414-00, Specifications).

2. Refer to: Radiator Splash Shield (501-02, Removal and Installation).

3. Refer to: Engine Cover - 5.0L (501-05, Removal and Installation).

4. Refer to: Air Cleaner Outlet Pipe T-Connector (303-12, Removal and Installation).

5. **WARNING:**

   Make sure to support the vehicle with axle stands.

   Raise and support the vehicle.

6. 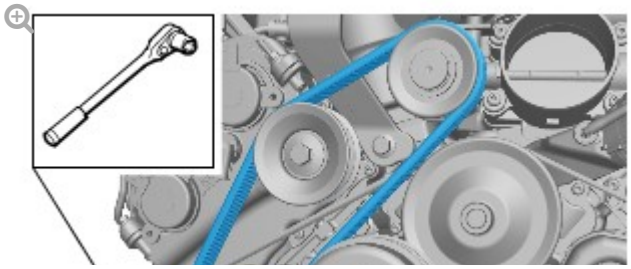

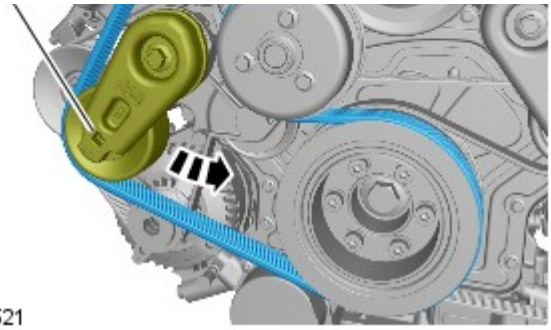

INSTALLATION

1. **CAUTION:**

   Make sure that the accessory drive belt is correctly aligned to the pulleys. Failure to follow this instruction may result in damage to the vehicle.

   To install reverse the removal procedure.

2012.0 RANGE ROVER (LM), 303-05

ACCESSORY DRIVE – V8 5.0L PETROL/V8 S/C 5.0L PETROL

SUPERCHARGER BELT IDLER PULLEY (G1224510)

REMOVAL AND INSTALLATION

PULLEY –

19.46.09	TENSIONER - SUPERCHARGER DRIVE BELT	5000 CC, AJ V8, SUPERCHARGED	0.7	USED WITHINS	+
26.25.09	IDLER PULLEY - COOLANT FAN BELT - RENEW	5000 CC, AJ V8, SUPERCHARGED	0.7	USED WITHINS	+

REMOVAL

1. Disconnect the battery ground cable.
   Refer to: Specifications (414-00 Charging System - General Information, Specifications).

2. Refer to: Radiator Splash Shield (501-02 Front End Body Panels, Removal and Installation).

3. Refer to: Engine Cover - V8 5.0L Petrol/V8 S/C 5.0L Petrol (501-05 Interior Trim and Ornamentation, Removal and Installation).

4. Refer to: Air Cleaner Outlet Pipe T-Connector (303-12D Intake Air Distribution and Filtering - V8 S/C 5.0L Petrol, Removal and Installation).

5. **WARNING:**

   Make sure to support the vehicle with axle stands.

   Raise and support the vehicle.

6. 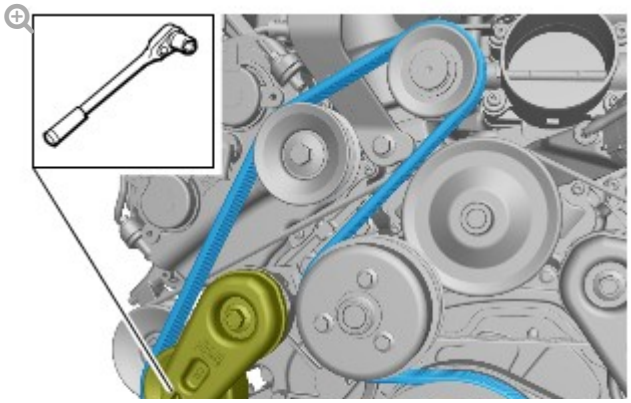

7.

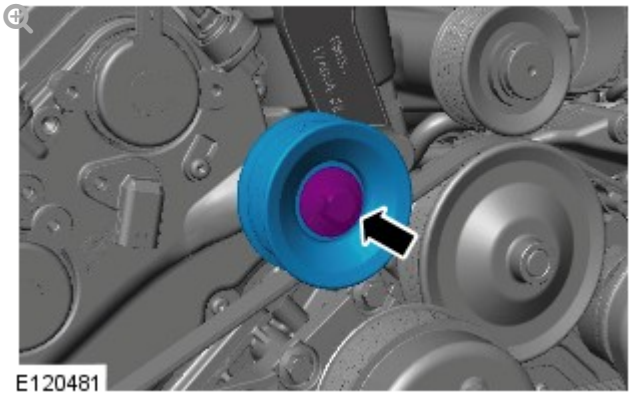

Torque: **47 Nm**

INSTALLATION

1.

CAUTION:

> Make sure the supercharger belt is correctly aligned to the pulleys. Failure to follow this instruction may result in damage to the vehicle.

To install, reverse the removal procedure.

2012.0 RANGE ROVER (LM), 303-05

ACCESSORY DRIVE – V8 5.0L PETROL/V8 S/C 5.0L PETROL

SUPERCHARGER BELT TENSIONER (G1224511)

REMOVAL AND INSTALLATION

19.46.09	PULLEY – TENSIONER – SUPERCHARGER DRIVE BELT	5000 CC, AJ V8, SUPERCHARGED	0.7	USED WITHINS	+

REMOVAL

1. Disconnect the battery ground cable.
   Refer to: Specifications (414-00 Charging System - General Information, Specifications).

2. Refer to: Radiator Splash Shield (501-02 Front End Body Panels, Removal and Installation).

3. Refer to: Engine Cover - 5.0L (501-05 Interior Trim and Ornamentation, Removal and Installation).

4. Refer to: Air Cleaner Outlet Pipe T-Connector (303-12 Intake Air Distribution and Filtering - 5.0L, Vehicles With: Supercharger, Removal and Installation).

5. **WARNING:**

> Make sure to support the vehicle with axle stands.

Raise and support the vehicle.

6.

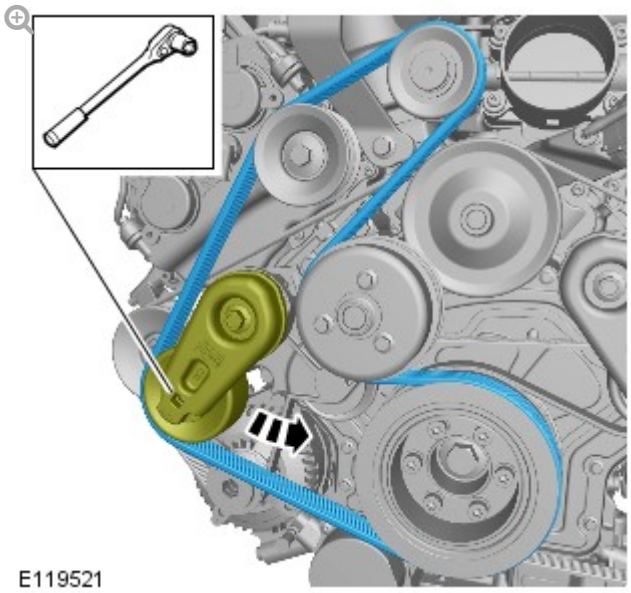

7.

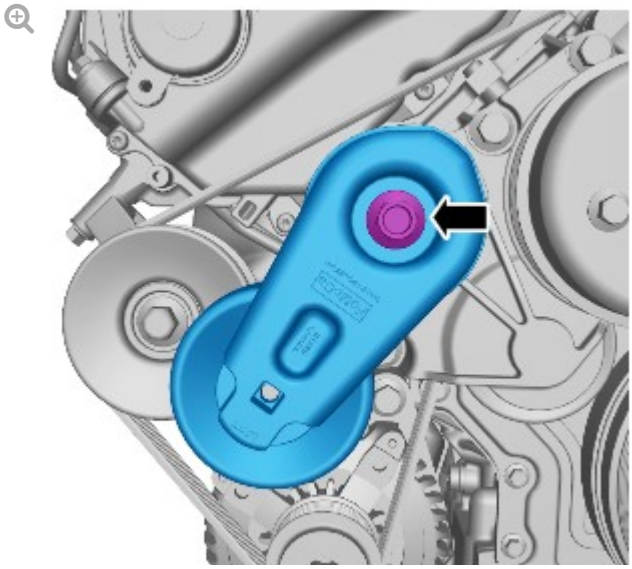

E119551

Torque: **40 Nm**

INSTALLATION

1. **CAUTIONS:**

- Make sure the supercharger belt is correctly aligned to the pulleys. Failure to follow this instruction may result in damage to the vehicle.
- Clean and inspect the accessory drive belt pulleys for damage.

To install, reverse the removal procedure.

STARTING SYSTEM – V8 5.0L PETROL/V8 S/C 5.0L PETROL

SPECIFICATIONS

DESCRIPTION	NM	LB-FT	LB-IN
Starter motor retaining bolts	48	36	-
Battery positive terminal connector retaining nut	10	7	-
Solenoid terminal connector retaining nut	4	-	35

2012.0 RANGE ROVER (LM), 303-06

STARTING SYSTEM – V8 5.0L PETROL/V8 S/C 5.0L PETROL

DESCRIPTION AND OPERATION

COMPONENT LOCATION

NOTE:

Installation on naturally aspirated engine shown, installation on supercharger engine similar.

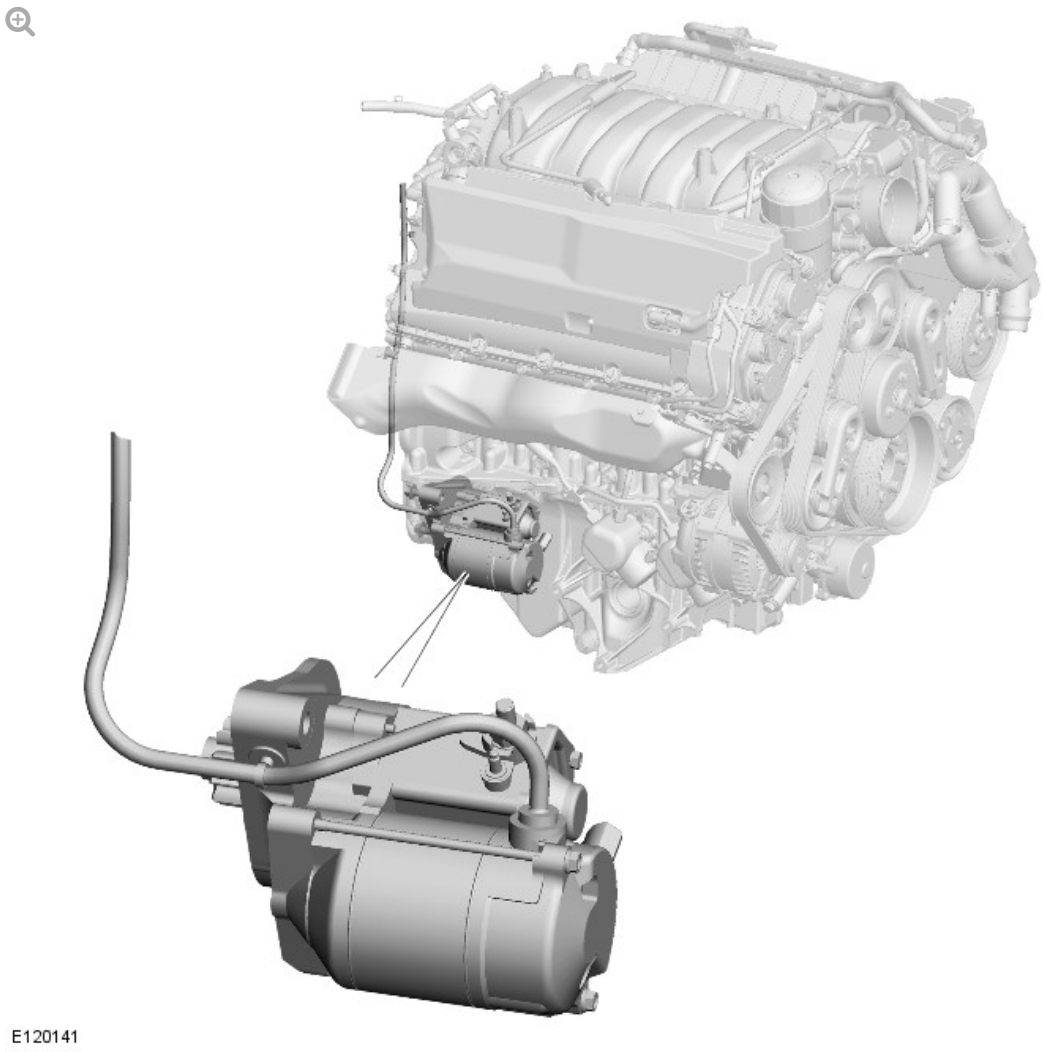

E120141

INTRODUCTION

The starter motor is manufactured by Denso and is rated at 1.4 kW. The motor is geared directly to the pinion. The motor is a series wound motor with an overrunning clutch. The interior of the motor is ventilated through a breather tube attached to the rear of the engine.

The starter motor is located on the rear right side of the engine sump. The motor is installed in an aperture in the sump and the pinion is engaged with the ring gear of the crankshaft drive plate.

A heavy duty cable, which supplies the electrical power to turn the starter motor, is connected to the battery positive terminal via 400 A megafuse.

At the starter motor, the cable is connected to a terminal stud on the solenoid. The power feed from the starter relay, to energize the solenoid, is connected to a second terminal stud on the solenoid.

Starer Motor Assembly

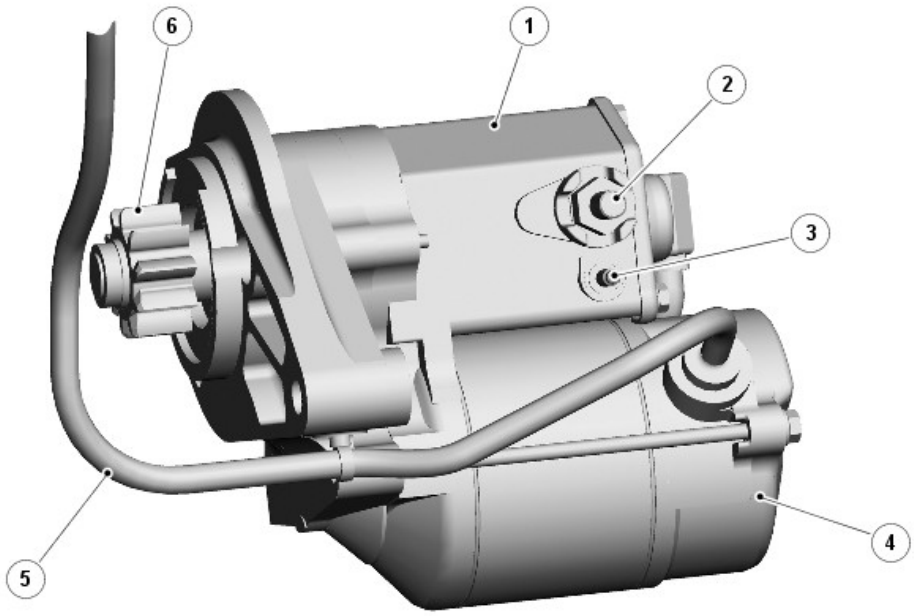

E120142

ITEM	DESCRIPTION
1	Starter solenoid
2	Starter power terminal
3	Solenoid power terminal
4	Electric motor
5	Breather tube
6	Pinion gear

CONTROL DIAGRAM

NOTE:

A = Hardwired.

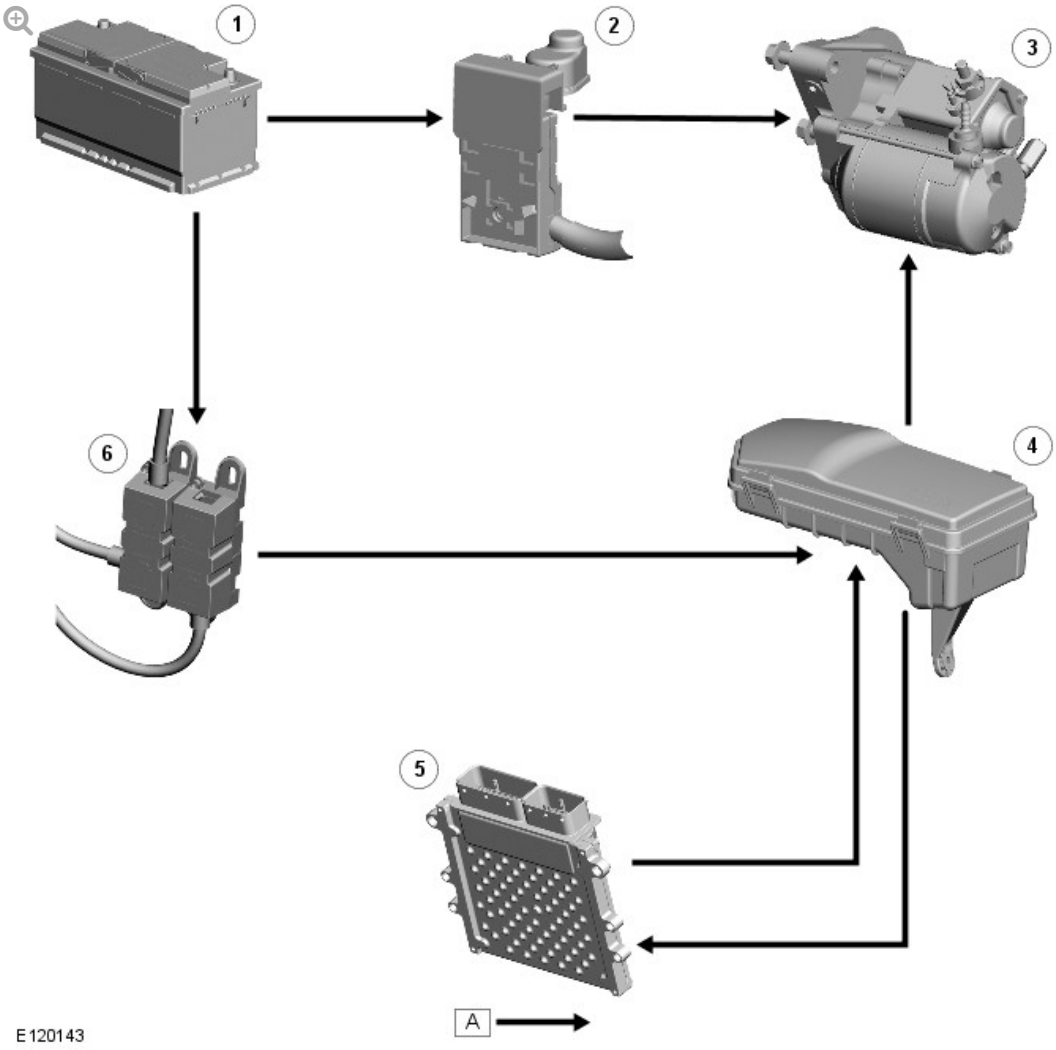

ITEM	DESCRIPTION
1	Battery
2	Terminal post megafuse (400 A)
3	Starter motor
4	EJB (engine junction box) (starter relay)
5	ECM (engine control module)
6	BJB (battery junction box) 2 (250 A megafuse)

OPERATION

Engine crank requests are monitored by the passive anti-theft system and, if valid, passed on to the ECM (engine control module).
For additional information, refer to: Anti-Theft - Passive (419-01 Anti-Theft - Passive, Description and Operation).

When the ECM receives a crank request, it energizes the starter relay in the EJB (engine junction box). The energized starter relay supplies 12 V power (fed via the 250 A megafuse in BJB (battery junction box) 2 to energize the pull-in coil of the starter solenoid. Once activated, the pull-in coil engages the solenoid plunger, which engages the pinion gear with the ring gear. The plunger then closes the solenoid circuit, feeding power from the 400 A megafuse on the battery positive terminal to the starter motor.

2012.0 RANGE ROVER (LM), 303-06

STARTING SYSTEM – V8 5.0L PETROL/V8 S/C 5.0L PETROL

DIAGNOSIS AND TESTING

PRINCIPLES OF OPERATION

For a detailed description of the starting system and operation, refer to the relevant Description and Operation section in the Workshop Manual.
REFER to: Starting System (303-06C Starting System - V8 5.0L Petrol/V8 S/C 5.0L Petrol, Description and Operation).

INSPECTION AND VERIFICATION

CAUTION:

Diagnosis by substitution from a donor vehicle is NOT acceptable. Substitution of control modules does not guarantee confirmation of a fault, and may also cause additional faults in the vehicle being tested and/or the donor vehicle.

1. Verify the customer concern.

1. Visually inspect for obvious signs of mechanical or electrical damage.

Visual Inspection

MECHANICAL	ELECTRICAL
▪ Gear selector lever cable adjustment (vehicles with automatic transmission) ▪ Starter motor ▪ Engine (turns freely)	▪ Battery ▪ Fuses ▪ Starter relay ▪ Wiring harness(es) ▪ Damaged, loose or corroded connectors ▪ Ignition switch ▪ Generator ▪ Engine Control Module (ECM) ▪ Transmission Control Module (TCM)

1. If an obvious cause for an observed or reported concern is found, correct the cause (if possible) before proceeding to the next step.

1. If the cause is not visually evident, verify the symptom and refer to the Symptom Chart, alternatively check for Diagnostic Trouble Codes (DTCs) and refer to the DTC Index.

1. Check DDW for open campaigns. Refer to the corresponding bulletins and SSM's which may be valid for the specific customer complaint and carry out the recommendations as needed.

SYMPTOM CHART

SYMPTOM	POSSIBLE CAUSES	ACTION

The engine does not crank (starter motor does **not** turn)	▪ Gear selector not in **P** or **N** position (vehicles with automatic transmission)
	▪ Battery
	▪ Starter relay
	  ▪ Output circuit: high resistance
	  ▪ Output circuit: short circuit to power
	▪ Invalid key code received by Central Junction Box (CJB)
	▪ Harness/Connectors
	▪ Starter motor
	▪ Ignition switch
	▪ Generator
	▪ Engine seized
		Make sure the gear selector is in the **P** or **N** position and correctly adjusted. Check the battery condition and state of charge. Check for DTCs indicating an immobilizer fault. Check the starter motor relay, ignition switch and generator circuits. Refer to the electrical guides. Check that the engine turns freely.

The engine does not crank (starter motor **does** turn)	▪ Starter motor fitment ▪ Starter motor ▪ Flywheel/Drive plate ring gear	Check the starter motor fitment (fasteners tight, starter motor square to engine, etc). Check the flywheel/drive plate ring gear teeth for damage, foreign objects, etc.
Engine cranks too slowly	▪ Battery ▪ Harness/Connectors ▪ Starter motor ▪ Oil grade	Check the battery condition and state of charge. Check the starter motor circuits. Refer to the electrical guides. Check the engine oil grade and condition.
Engine cranks too fast	▪ Low engine compression	Check the engine condition and compressions.
Excessive starter motor noise	▪ Starter motor ▪ Flywheel/Drive plate ring gear ▪ Starter motor installation/casing	Check the starter motor fitment (fasteners tight, motor square to engine, etc). Check the starter motor casing condition. Check the flywheel/drive plate ring gear teeth for damage, foreign objects, etc.

ECO (stop/start) system inoperative	▪ ECO system inhibited
	▪ ECO system fault
		NOTE:
		"ECO STOP/START FAULT" will be displayed in the instrument cluster message centre when the system is inoperative due to a fault.
		▪ Refer to the ECO System Inhibits table for possible inhibit conditions
		  ▪ ECO system inhibited due to owner error: Explain/demonstrate the ECO system operation to the owner
		  ▪ ECO system inhibited due to battery condition: Using the manufacturer approved diagnostic system, perform the Power Supply Service Mode Diagnostic routine
		▪ Using the manufacturer approved diagnostic system, check the Engine Control Module (ECM) for related DTCs and refer to the relevant DTC index
		▪ Automatic/ECO stop/start system inhibited due to a DTC clear performed and a drive cycle not completed: Road test the vehicle between 48-80 km/h (30-50 mph) for 2 to 3 minutes, allow the engine to idle, auto stop/start will now activate

ECO SYSTEM INHIBITS

The inhibit conditions listed below will not set Diagnostic Trouble Codes (DTCs) but will set flags which can be viewed using the manufacturer approved diagnostic system - Datalogger / Engine Control Module (ECM). Normal ECO system operation will resume when an inhibit condition is no longer present, but the battery related inhibits may persist for some time.

NOTES:

- Performing a DTC clear on a petrol (gas) engine vehicle will inhibit the auto stop/start system.
- Do not reset the Battery Monitoring System (BMS) to rectify battery condition inhibits. This may temporarily restore ECO system

operation but will lead to a recurrence of the fault.

INHIBITS
▪ ECO switch has been pressed by driver ▪ DTC clear performed ▪ Transmission not in neutral ▪ Clutch pedal not fully released ▪ Accelerator pedal not released ▪ Hood open detected ▪ Driver door detected open ▪ Driver seatbelt not fastened ▪ Hill Descent Control (HDC) is switched on ▪ Terrain response special programme selected ▪ Climate control demand exceeds calibrated threshold ▪ Heated windshield operating ▪ Trailer connected ▪ Brake booster vacuum below threshold ▪ Engine coolant temperature below threshold ▪ Engine oil temperature below threshold ▪ Catalytic converter outside either pre or post calibration range ▪ Diesel Particulate Filter (DPF) active regeneration in progress (diesel engines only) ▪ Battery state of charge low ▪ Battery cold cranking capability below threshold ▪ Ambient temperature above 40°C ▪ Ambient temperature below 0°C

DTC INDEX

For a list of Diagnostic Trouble Codes (DTCs) that could be logged on this vehicle, please refer to Section 100-00. REFER to: Diagnostic Trouble Code (DTC) Index - V8 5.0L Petrol/V8 S/C 5.0L Petrol (100-00 General Information, Description and Operation).

STARTING SYSTEM – V8 5.0L PETROL/V8 S/C 5.0L PETROL

STARTER MOTOR (G1224852)

REMOVAL AND INSTALLATION

86.60.01	STARTER MOTOR – RENEW	5000 CC, AJ V8	1.2	USED WITHINS	+

REMOVAL

NOTES:

- Removal steps in this procedure may contain installation details.
- Some variation in the illustrations may occur, but the essential information is always correct.

1. Disconnect the battery ground cable.
   Refer to: Specifications (414-00 Charging System - General Information, Specifications).

2. **WARNING:**

   Make sure to support the vehicle with axle stands.

   Raise and support the vehicle.

3. **CAUTION:**

LH illustration shown, RH is similar.

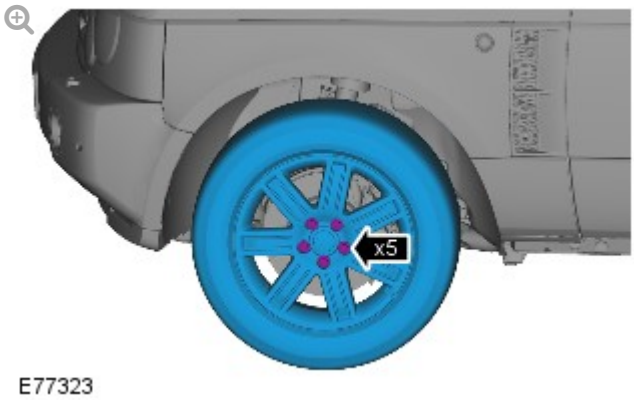

Remove the RH front wheel and tire.

Torque: **140 Nm**

4. Refer to: Radiator Splash Shield (501-02 Front End Body Panels, Removal and Installation).

5. 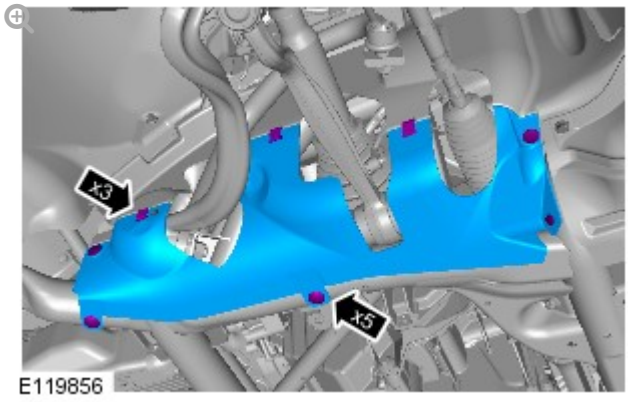

Torque: **8 Nm**

6. 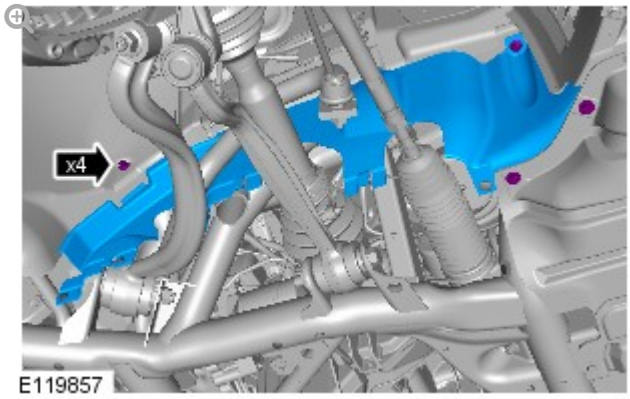

Torque: **8 Nm**

7.

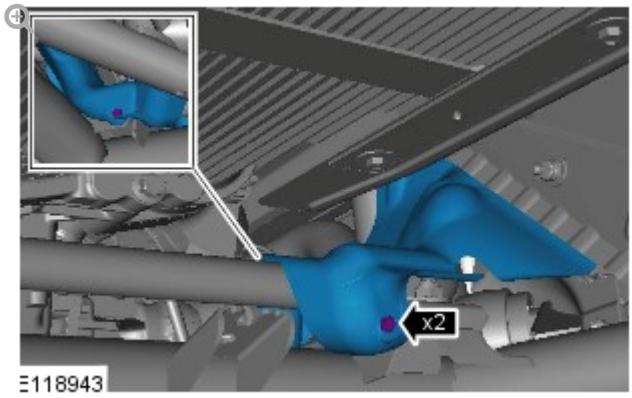

Torque: **10 Nm**

8.

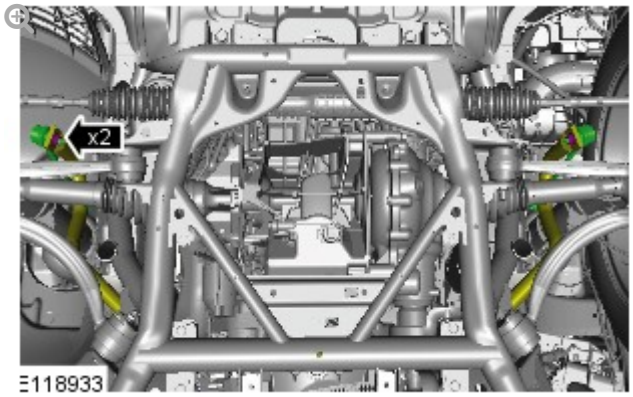

Torque: **100 Nm**

9.

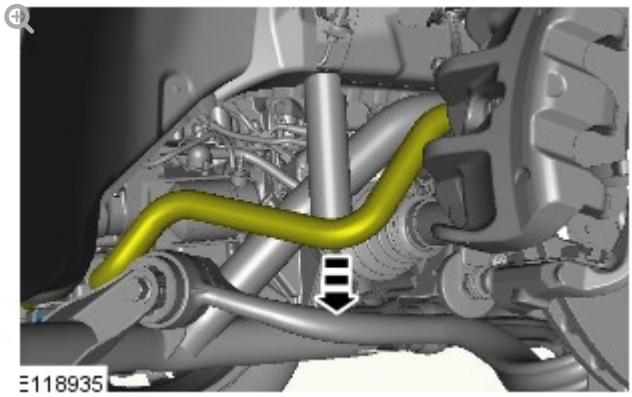

10.

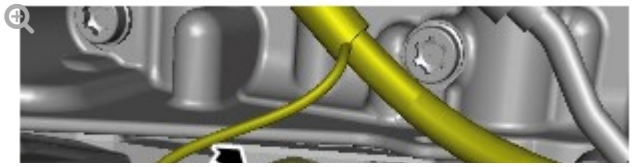

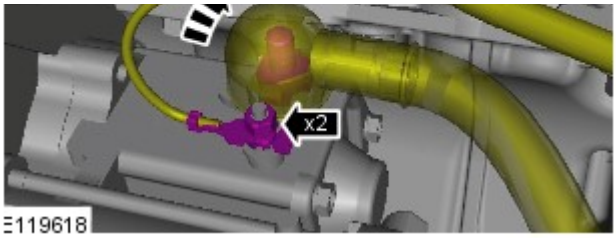

Torque:

M8 **10 Nm**

M6 **4 Nm**

11.

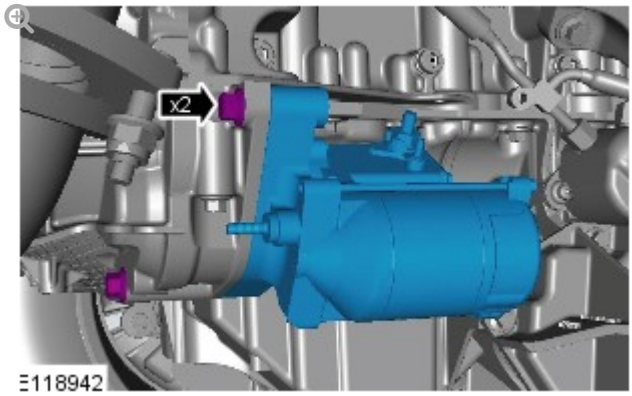

Torque: **48 Nm**

INSTALLATION

1. To install, reverse the removal procedure.

2012.0 RANGE ROVER (LM), 303-07

ENGINE IGNITION – V8 5.0L PETROL/V8 S/C 5.0L PETROL

SPECIFICATIONS

ITEM	SPECIFICATION
Firing order	1:2:7:3:4:5:6:8
Spark plug type - Vehicles with supercharger	ILKAR7C-10
Spark plug type - Vehicles without supercharger	ILKAR7C-10

DESCRIPTION	NM	LB-FT	LB-IN
Spark plugs	22	16	-
Ignition coil-on-plug retaining bolts	7	5	-

2012.0 RANGE ROVER (LM), 303-07

ENGINE IGNITION – V8 5.0L PETROL/V8 S/C 5.0L PETROL

DESCRIPTION AND OPERATION

COMPONENT LOCATION

NOTE:

Installation on RHD (right-hand drive) naturally aspirated vehicle shown, other installations similar.

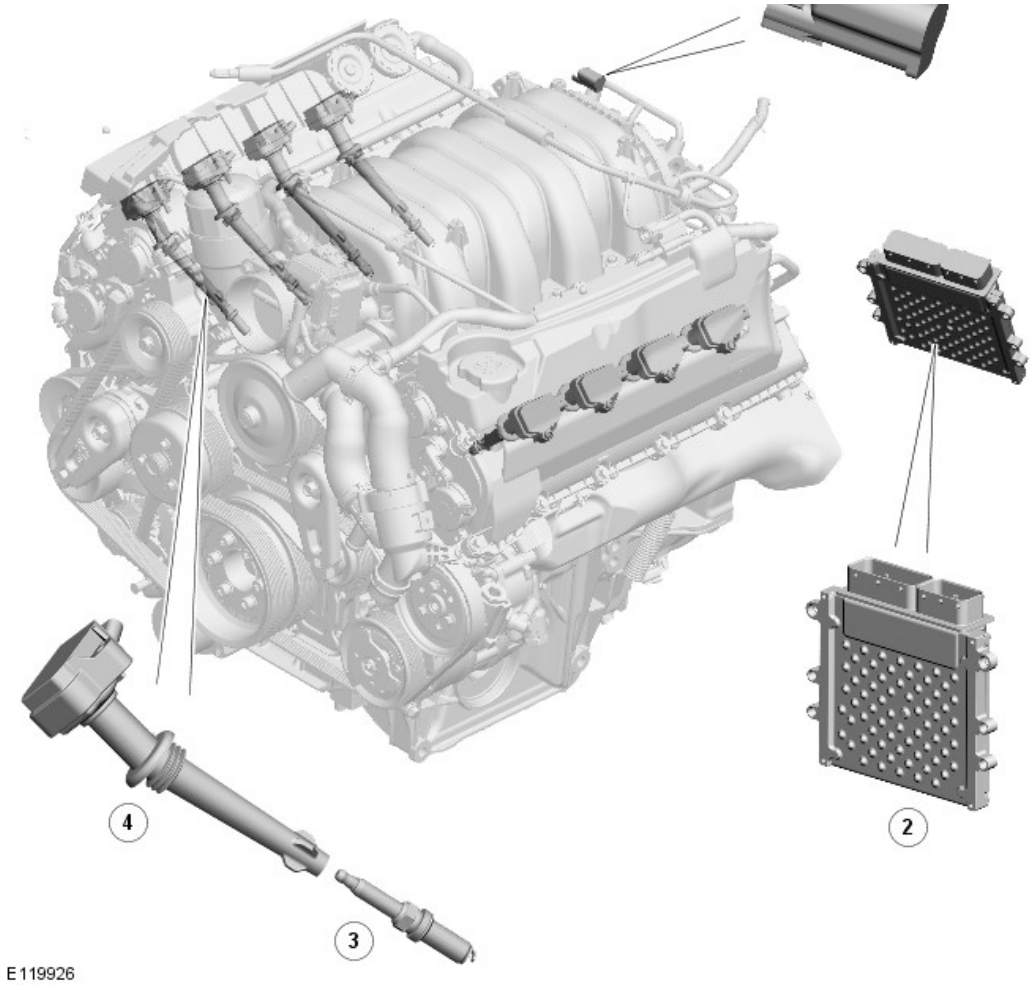

ITEM	DESCRIPTION
1	RFI (radio frequency interference) suppressor
2	ECM (engine control module)
3	Spark plug (8 off)
4	Ignition coil (8 off)

INTRODUCTION

The engine ignition system is a coil-on-plug, single spark system controlled by the ECM (engine control module). An iridium tipped spark plug is installed in each combustion chamber, between the inlet and exhaust valves, and an ignition coil is installed on each spark plug. A RFI (radio frequency interference) suppressor is connected to the power feed to the ignition coils.

IGNITION COILS

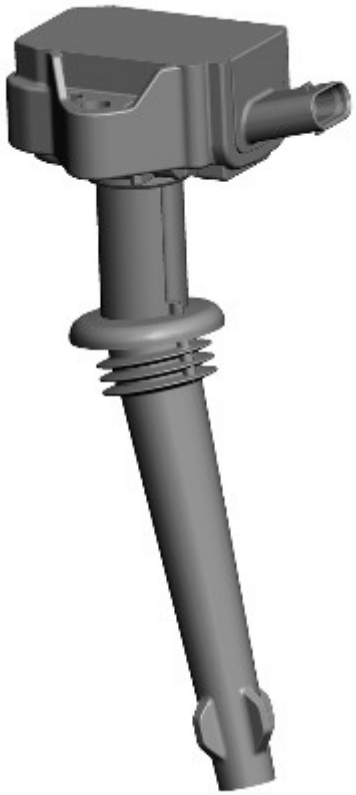

E116147

The ignition coils are installed in the cylinder head covers, under the NVH (noise, vibration and harshness) covers. Each ignition coil locates on a spark plug and is secured to the related cylinder head cover with a single screw. Each ignition coil incorporates a three pin electrical connector for connection to the engine harness.

Each ignition coil contains a primary and a secondary winding. The primary winding receives electrical power from the ignition relay in the power distribution box. A power stage in the primary winding allows the ECM to interrupt the power supply, to induce a voltage in the secondary winding and thus the spark plug. A diode in the ground side of the secondary winding reduces any undesirable switch-on voltage, to prevent misfiring into the intake manifold. The power stage limits the maximum voltage and current in the primary winding, to protect the power stage and limit the voltage in the secondary winding.

RFI SUPPRESSOR

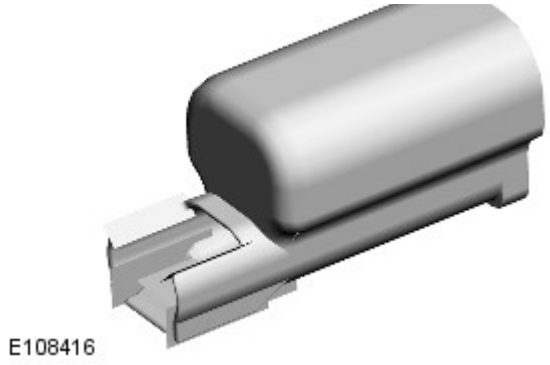

The RFI (radio frequency interference) suppressor is installed on the engine harness carrier at the rear of the engine.

CONTROL DIAGRAM

NOTE:

A = Hardwired

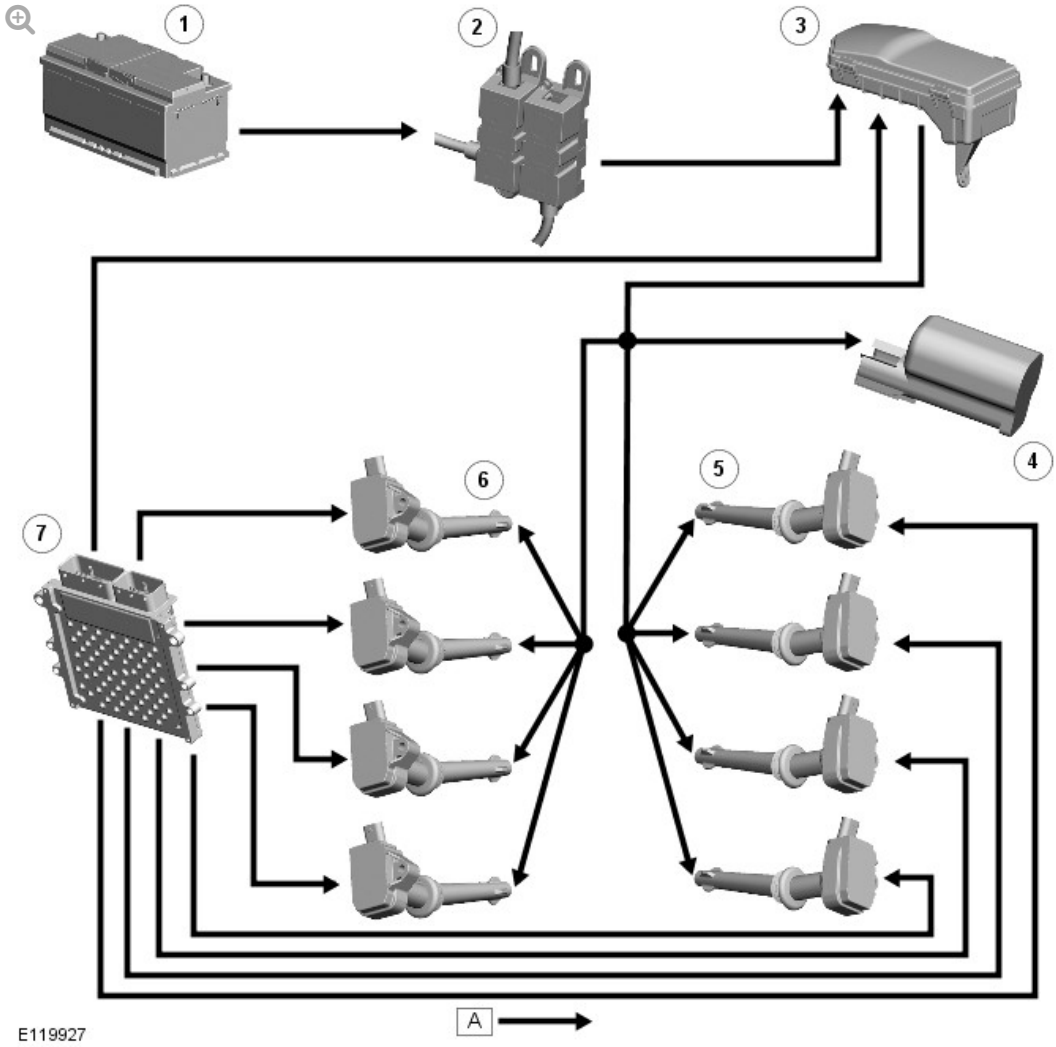

ITEM	DESCRIPTION
1	Battery
2	BJB (battery junction box) 2 (250 A megafuse)
3	EJB (engine junction box) (ECM relay)
4	RFI suppressor
5	LH (left hand) cylinder bank ignition coil (4 off)
6	RH (right hand) cylinder bank ignition coil (4 off)
7	ECM

OPERATION

The ignition coils are supplied with electrical power from the battery via a 250 A megafuse in BJB 2 and the ECM relay in the EJB (engine junction box). The ECM controls the operation of the ECM relay.

The ECM sends a separate signal to each ignition coil to trigger the power stage switching. The ECM calculates the dwell time from the battery voltage and engine speed, to ensure a constant energy level is produced in the secondary coil each time the power stage is switched. This ensures sufficient spark energy is available without excessive primary current flow, which avoids overheating and damage to the ignition coils.

The ECM calculates the ignition timing for individual cylinders from:

- Engine speed
- Camshaft position
- Engine load
- Engine temperature
- The knock control function
- The shift control function
- The idle speed control function.

2012.0 RANGE ROVER (LM), 303-07

ENGINE IGNITION – V8 5.0L PETROL/V8 S/C 5.0L PETROL

DIAGNOSIS AND TESTING

PRINCIPLES OF OPERATION

For a detailed description of the engine ignition system and operation, refer to the relevant Description and Operation section of the workshop manual. REFER to: Engine Ignition (303-07A Engine Ignition - V8 5.0L Petrol/V8 S/C 5.0L Petrol, Description and Operation).

INSPECTION AND VERIFICATION

CAUTION:

Diagnosis by substitution from a donor vehicle is **NOT** acceptable. Substitution of control modules does not guarantee confirmation of a fault and may also cause additional faults in the vehicle being checked and/or the donor vehicle.

NOTE:

Check and rectify basic faults before beginning diagnostic routines involving pinpoint tests.

1. Verify the customer concern.

1. Visually inspect for obvious signs of mechanical and electrical damage.

Visual Inspection

MECHANICAL	ELECTRICAL
▪ Engine oil level ▪ Cooling system coolant level ▪ Fuel level ▪ Fuel contamination/grade/quality	▪ Fuses ▪ Wiring harness ▪ Loose or corroded electrical connectors ▪ Ignition coils ▪ Sensor(s) ▪ Engine Control Module (ECM) ▪ Transmission Control Module (TCM)

1. If an obvious cause for an observed or reported concern is found, correct the cause (if possible) before proceeding to the next step.

1. If the cause is not visually evident, verify the symptom and refer to the Symptom Chart, alternatively check for Diagnostic Trouble Codes (DTCs) and refer to the DTC Index.

SYMPTOM CHART

SYMPTOM	POSSIBLE CAUSES	ACTION
Engine cranks, but does not fire	▪ Engine breather system disconnected/restricted ▪ Ignition system ▪ Fuel system ▪ Electronic engine control	Ensure the engine breather system is free from restriction and is correctly installed. Check for ignition system, fuel system and electronic engine control DTCs and refer to the relevant DTC Index
Engine cranks and fires, but will not start	▪ Evaporative emissions purge valve ▪ Fuel pump ▪ Spark plugs	Check for evaporative emissions, fuel system and ignition system related DTCs and refer to the relevant DTC Index

	▪ HT short to ground (tracking) check rubber boots for cracks/damage ▪ Ignition system	
Difficult cold start	▪ Engine coolant level/anti-freeze content ▪ Battery ▪ Electronic engine controls ▪ Fuel pump ▪ Purge valve	Check the engine coolant level and condition. Ensure the battery is in a fully charged and serviceable condition. Check for electronic engine controls, engine emissions, fuel system and evaporative emissions system related DTCs and refer to the relevant DTC Index
Difficult hot start	▪ Injector leak ▪ Electronic engine control ▪ Purge valve ▪ Fuel pump ▪ Ignition system	Check for injector leak, install new injector as required. Check for electronic engine controls, evaporative emissions, fuel system, ignition system and engine emission system related DTCs and refer to the relevant DTC Index
Difficult to start after hot soak (vehicle standing, engine off, after engine has reached operating temperature)	▪ Injector leak ▪ Electronic engine control ▪ Purge valve ▪ Fuel pump ▪ Ignition system	Check for injector leak, install new injector as required. Check for electronic engine controls, evaporative emissions, fuel system, ignition system and engine emission system related DTCs and refer to the relevant DTC Index
Engine stalls soon after start	▪ Breather system disconnected/restricted ▪ ECM relay ▪ Electronic engine control ▪ Ignition system ▪ Air intake system restricted ▪ Air leakage ▪ Fuel lines	Ensure the engine breather system is free from restriction and is correctly installed. Check for electronic engine control, ignition system and fuel system related DTCs and refer to the relevant DTC Index. Check for blockage in air filter element and air intake system. Check for air leakage in air intake system
Engine hesitates/poor	▪ Fuel pressure, fuel pump, fuel lines	Check for fuel system related DTCs and refer to the relevant DTC Index.

acceleration	▪ Injector leak ▪ Air leakage ▪ Electronic engine control ▪ Throttle motor ▪ Restricted accelerator pedal travel (carpet, etc) ▪ Ignition system ▪ Transmission malfunction	Check for injector leak, install new injector as required. Check for air leakage in air intake system. Ensure accelerator pedal is free from restriction. Check for electronic engine controls, ignition, engine emission system and transmission related DTCs and refer to the relevant DTC Index
Engine backfires	▪ Fuel pump/lines ▪ Air leakage ▪ Electronic engine controls ▪ Ignition system ▪ Sticking variable camshaft timing (VCT) hub	Check for fuel system failures. Check for air leakage in intake air system. Check for electronic engine controls, ignition system and VCT system related DTCs and refer to the relevant DTC Index
Engine surges	▪ Fuel pump/lines ▪ Electronic engine controls ▪ Throttle motor ▪ Ignition system	Check for fuel system failures. Check for electronic engine controls, throttle system and ignition system related DTCs and refer to the relevant DTC Index
Engine detonates/knocks	▪ Fuel pump/lines ▪ Air leakage ▪ Electronic engine controls ▪ Sticking VCT hub	Check for fuel system failures. Check for air leakage in intake air system. Check for electronic engine controls and VCT system related DTCs and refer to the relevant DTC Index
No throttle response	▪ Electronic engine controls ▪ Throttle motor	Check for electronic engine controls and throttle system related DTCs and refer to the relevant DTC Index
Poor throttle response	▪ Breather system disconnected/restricted ▪ Electronic engine control ▪ Transmission	Ensure the engine breather system is free from restriction and is correctly installed. Check for electronic engine controls, transmission and traction control related DTCs and refer to the related DTC Index. Check for air

	▪ Transmission malfunction ▪ Traction control event ▪ Air leakage	Related DTC index. Check for air leakage in intake air system

DTC INDEX

For a list of Diagnostic Trouble Codes (DTCs) that could be logged on this vehicle, please refer to Section 100-00. REFER to: Diagnostic Trouble Code (DTC) Index - V8 5.0L Petrol/V8 S/C 5.0L Petrol (100-00 General Information, Description and Operation).

2012.0 RANGE ROVER (LM), 303-07

ENGINE IGNITION – V8 5.0L PETROL/V8 S/C 5.0L PETROL

IGNITION COIL–ON–PLUG

(G1224088)

18.20.44	IGNITION COIL - MULTIPLE - EACH - RENEW	5000 CC, AJ V8	0.2	USED WITHINS	+
18.20.44	IGNITION COIL - MULTIPLE - EACH - RENEW	AJ V8, SUPERCHARGED	0.3	USED WITHINS	+

REMOVAL

NOTE:

Removal steps in this procedure may contain installation details.

1. Disconnect the battery ground cable.
   Refer to: Specifications (414-00, Specifications).

2. Refer to: Engine Cover - 5.0L (501-05, Removal and Installation).

3. **NOTE:**

   Some variation in the illustrations may occur, but the essential information is always correct.

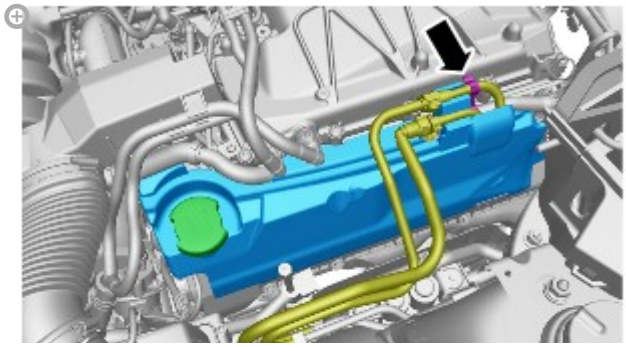

4.

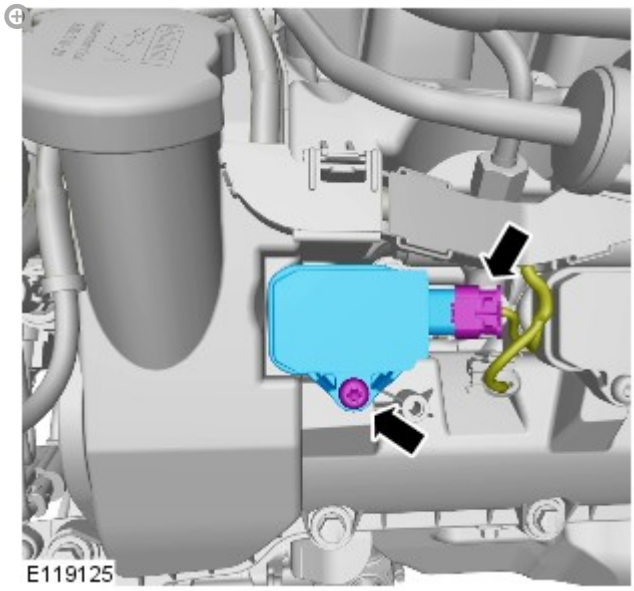

Torque: **7 Nm**

INSTALLATION

1. To install, reverse the removal procedure.

2012.0 RANGE ROVER (LM), 303-08

ENGINE EMISSION CONTROL – V8 S/C 5.0L PETROL

DESCRIPTION AND OPERATION

COMPONENT LOCATION

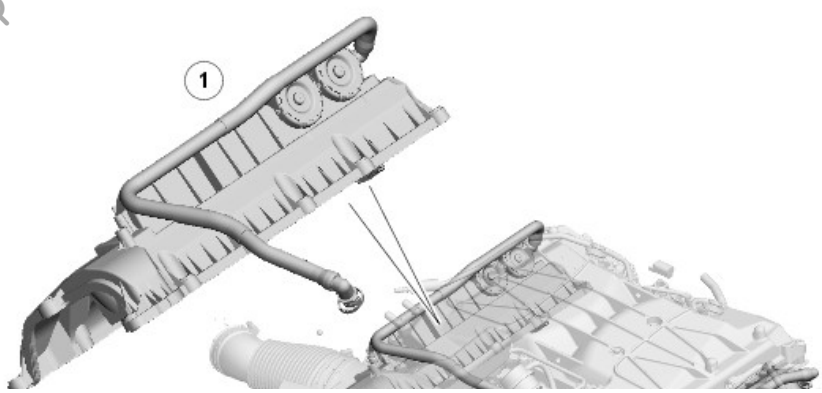

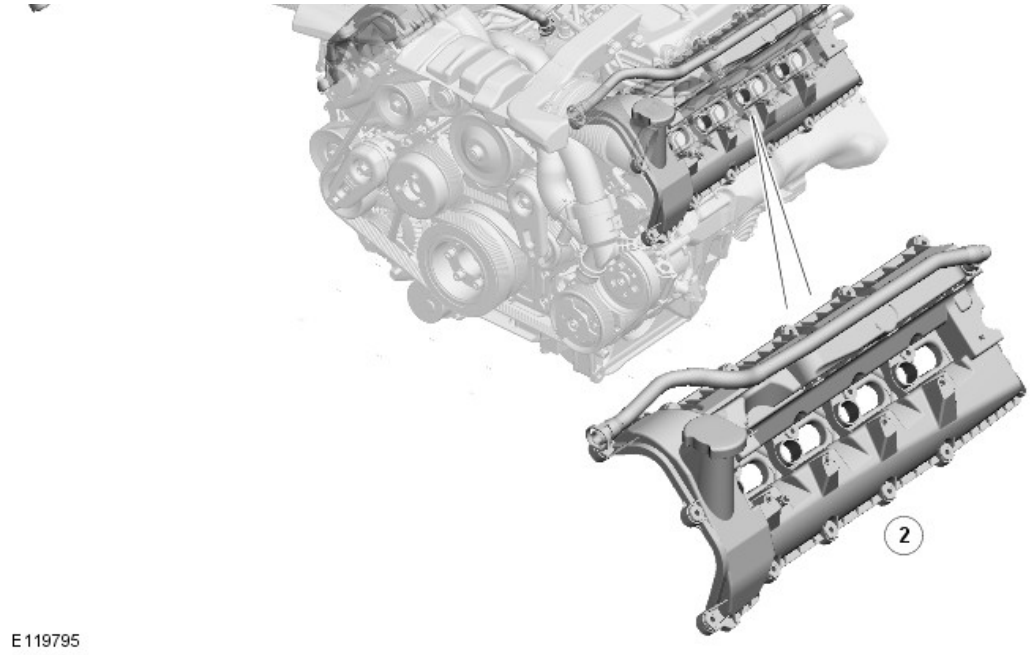

ITEM	DESCRIPTION
1	Part load breather
2	Full load breather

INTRODUCTION

The engine emission control system reduces the level of hydrocarbon emissions released to atmosphere from the engine. The engine emission control system consists of a PCV (positive crankcase ventilation) system with part and full load breathers. Piston blow-by gases are drawn through the breathers into the engine air intake and added to the air charge. The resultant depression in the engine sump, front covers and cylinder head covers reduces the load on the joint seals in those areas.

PART LOAD BREATHER

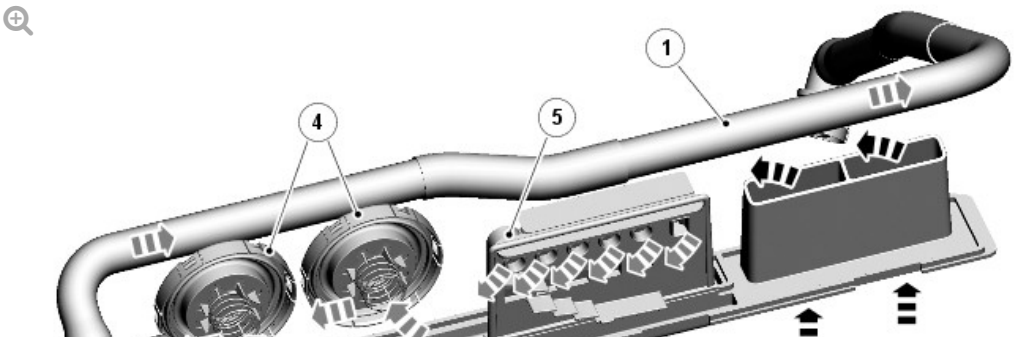

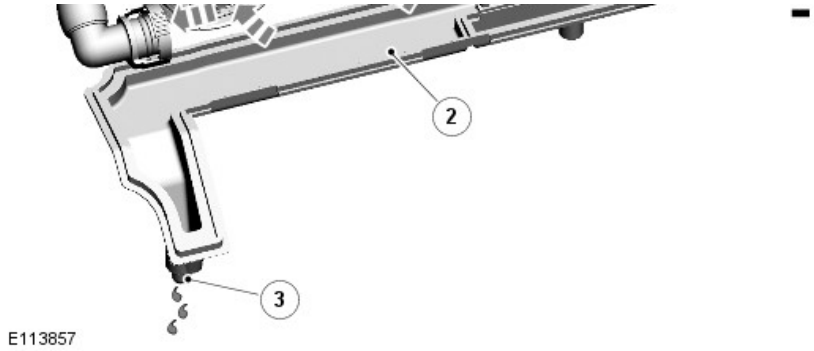

ITEM	DESCRIPTION
1	Flexible hose
2	Baffle plate
3	Oil drain
4	PCV (positive crankcase ventilation) valves
5	Oil separator

The part load breather consists of an oil separator, two PCV valves and a flexible hose. The oil separator and the PCV valves are installed in the top of the RH (right-hand) cylinder head cover. The flexible hose connects the RH cylinder head cover to the inlet of the SC (supercharger).

The oil separator is installed in a channel in the top of the cylinder head cover. A baffle plate, which incorporates a gas inlet and an oil drain, is installed over the channel. The two PCV valves are installed on the outside of the cylinder head cover and connected in parallel in the gas outlet from the channel to the flexible hose. The PCV valves prevent reverse flow into the cylinder head cover when there is minimal depression in the inlet of the SC.

FULL LOAD BREATHER

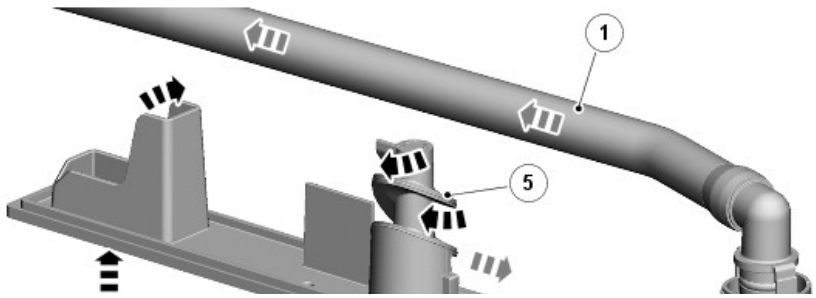

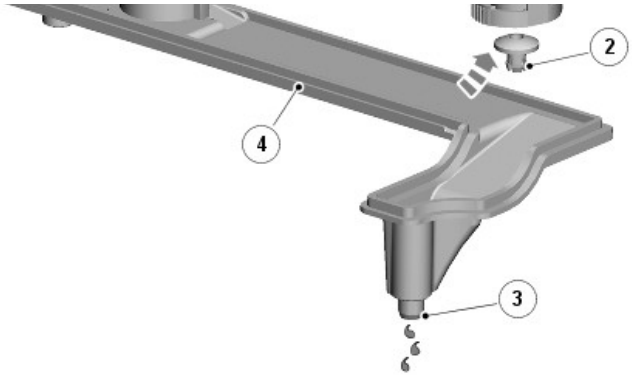

ITEM	DESCRIPTION
1	Flexible hose
2	Two-way valve
3	Oil drain
4	Baffle plate
5	Oil separator

The full load breather consists of an oil separator, a two-way valve and a flexible hose. The oil separator and the two-way valve are installed in the top of the LH (left-hand) cylinder head cover. The flexible hose connects the LH cylinder head cover to the LH air duct of the intake air distribution and filtering system.

The oil separator is installed in a channel in the top of the cylinder head cover. A baffle plate, which incorporates a gas inlet and an oil drain, is installed over the channel. The two-way valve is installed in the gas outlet from the channel. The two-way valve prevents reverse flow into the cylinder head cover when there is minimal depression in the air duct.

2012.0 RANGE ROVER (LM), 303-08

ENGINE EMISSION CONTROL – V8 S/C 5.0L PETROL

DIAGNOSIS AND TESTING

PRINCIPLES OF OPERATION

For a detailed description of the engine emission system and operation, refer to the relevant Description and Operation section of the Workshop Manual.

REFER to: Engine Emission Control (303-08D Engine Emission Control - V8 S/C 5.0L Petrol, Description and Operation).

INSPECTION AND VERIFICATION

CAUTION:

Diagnosis by substitution from a donor vehicle is NOT acceptable. Substitution of control modules does not guarantee confirmation of a fault, and may also cause additional faults in the vehicle being tested and/or the donor vehicle.

1. Verify the customer concern.

1. Visually inspect for obvious signs of mechanical or electrical damage.

Visual Inspection

MECHANICAL	ELECTRICAL
▪ Engine breather hoses ▪ Oil separator	▪ Fuse(s) ▪ Wiring harness ▪ Loose or corroded electrical connector(s) ▪ Intake manifold tuning (IMT) valve ▪ Engine control module (ECM)

1. If an obvious cause for an observed or reported concern is found, correct the cause (if possible) before proceeding to the next step.

1. If the cause is not visually evident, verify the symptom and refer to the Symptom Chart, alternatively check for Diagnostic Trouble Codes (DTCs) and refer to the DTC Index.

SYMPTOM CHART

SYMPTOM	POSSIBLE CAUSES	ACTION
Engine stops/stalls	▪ Breather system disconnected/restricted/blocked	Check the engine breather system. Check the oil separator. Check for DTCs indicating a throttle or sensor fault. Rectify as necessary.
Excessive fuel consumption	▪ Breather system restricted/blocked	
Excessive black smoke		
Excessive emissions		
Excessive blow-by	▪ Breather system restricted/blocked	Check the engine breather hoses. Check the oil separator. Rectify as necessary.
Engine oil leaks	▪ Breather system restricted/blocked	Check the engine breather hoses. Check the oil separator. Rectify as necessary.

DTC INDEX

For a list of Diagnostic Trouble Codes (DTCs) that could be logged on this vehicle, please refer to Section 100-00. REFER to: Diagnostic Trouble Code (DTC) Index - V8 5.0L Petrol/V8 S/C 5.0L Petrol (100-00 General Information, Description and Operation).

2012.0 RANGE ROVER (LM), 303-12

INTAKE AIR DISTRIBUTION AND FILTERING – V8 S/C 5.0L PETROL

5.0L PETROL

SPECIFICATIONS

DESCRIPTION	NM	LB-FT	LB-IN
Air Cleaner Outlet Pipe T-Connector bolt	10	7	-
Air Cleaner Outlet Pipe T-Connector clip	3.5	-	31
Air Cleaner Outlet clips	3.5	-	31
Supercharger retaining bolts	25	18	-
Charge air cooler lower assembly retaining bolts	25	18	-
Throttle body retaining studs	10	7	-
Charge air cooler top assembly retaining bolts	25	18	-
Manifold absolute pressure and temperature (MAPT) sensor	5	-	44
Coolant outlet pipe	11	8	-

2012.0 RANGE ROVER (LM), 303-12

INTAKE AIR DISTRIBUTION AND FILTERING – V8 S/C 5.0L PETROL

DESCRIPTION AND OPERATION

COMPONENT LOCATION

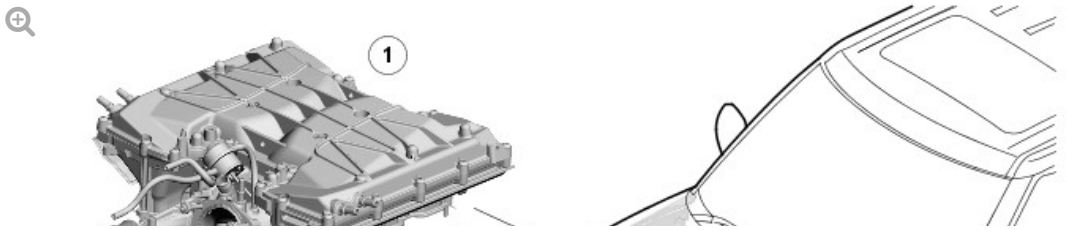

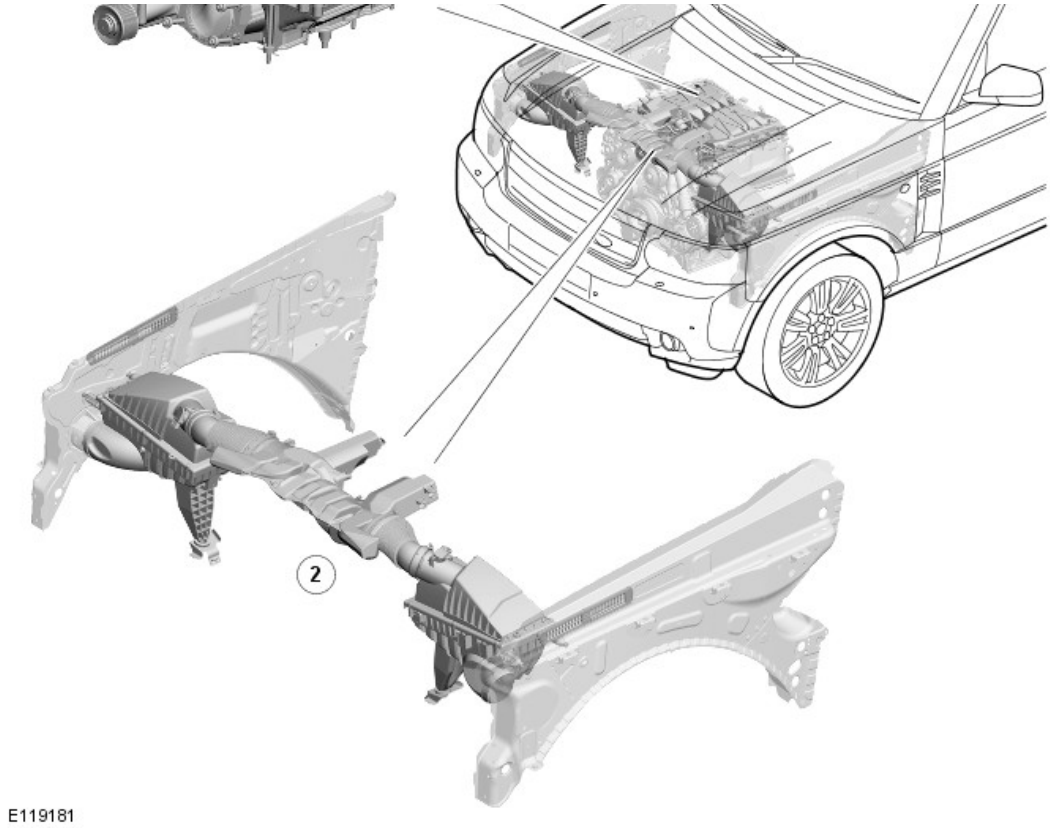

ITEM	DESCRIPTION
1	Supercharger and intake manifolds
2	Air intakes, air cleaners and air ducts

INTRODUCTION

The intake air distribution and filtering system comprises:

- Dual air intakes, air cleaners and air ducts.
- A supercharger and intake manifolds.

AIR INTAKES, AIR CLEANERS AND AIR DUCTS

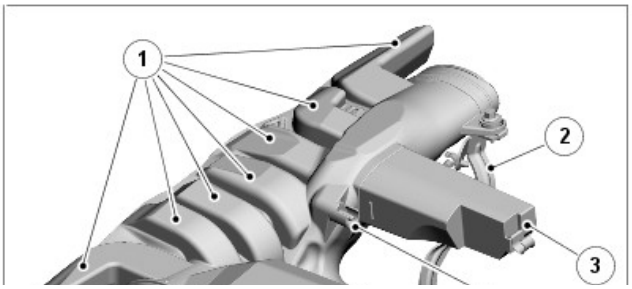

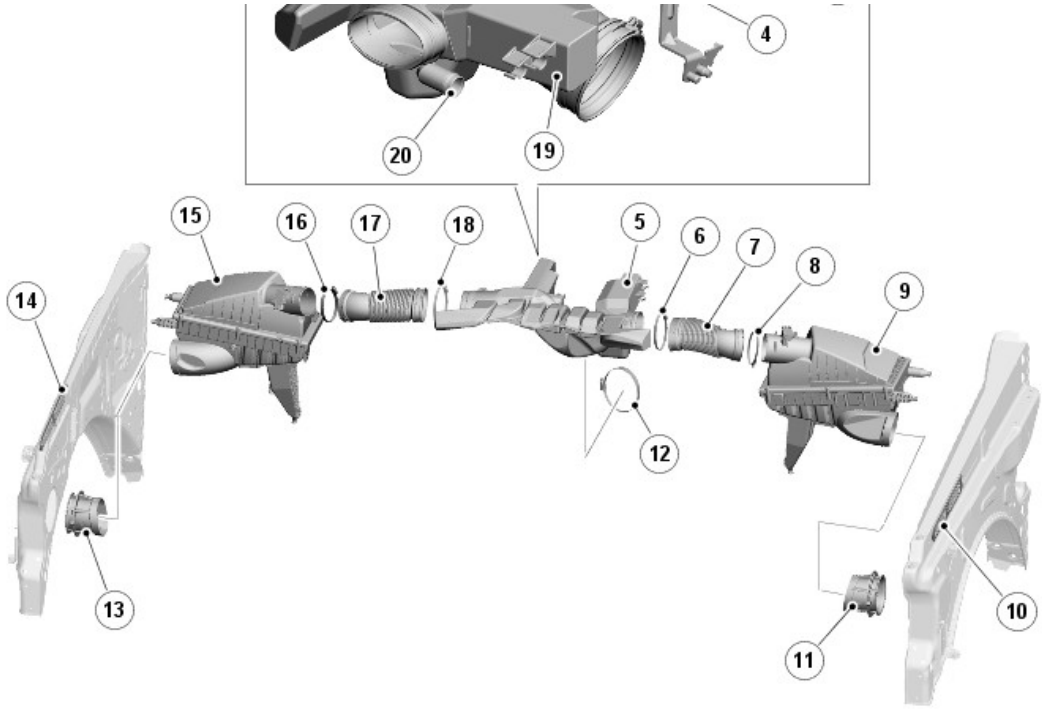

E119182

ITEM	DESCRIPTION
1	Resonators
2	Mounting grommet and bracket
3	Resonator
4	Connector stub for vacuum tube of S/C (supercharger) bypass valve actuator
5	Clean air duct
6	Hose clamp
7	LH (left hand) clean air convolute
8	Hose clamp
9	LH air cleaner
10	LH air intake
11	LH dirty air duct
12	Hose clamp
13	RH (right hand) dirty air duct
14	RH air intake
15	RH air cleaner
16	Hose clamp

17	RH clean air convolute
18	Hose clamp
19	Resonator
20	Full load breather connector stub

Air is supplied to the air cleaners, from under the sides of the hood, through the air intakes, the front fender aprons and the dirty air ducts.

The air cleaners are located in the engine compartment, forward of the suspension housings. Three isolators locate each air cleaner to a bracket on the related front side member and front fender apron. Each air cleaner consists of an air cleaner element installed in a tray and enclosed with a cover secured by six screws. Air inlet and outlet connections are incorporated into the tray and cover respectively. The bottom of the tray incorporates a drain valve to prevent the accumulation of water in the air cleaner. The air outlet connection incorporates a MAFT (mass air flow and temperature) sensor.

Air Cleaner

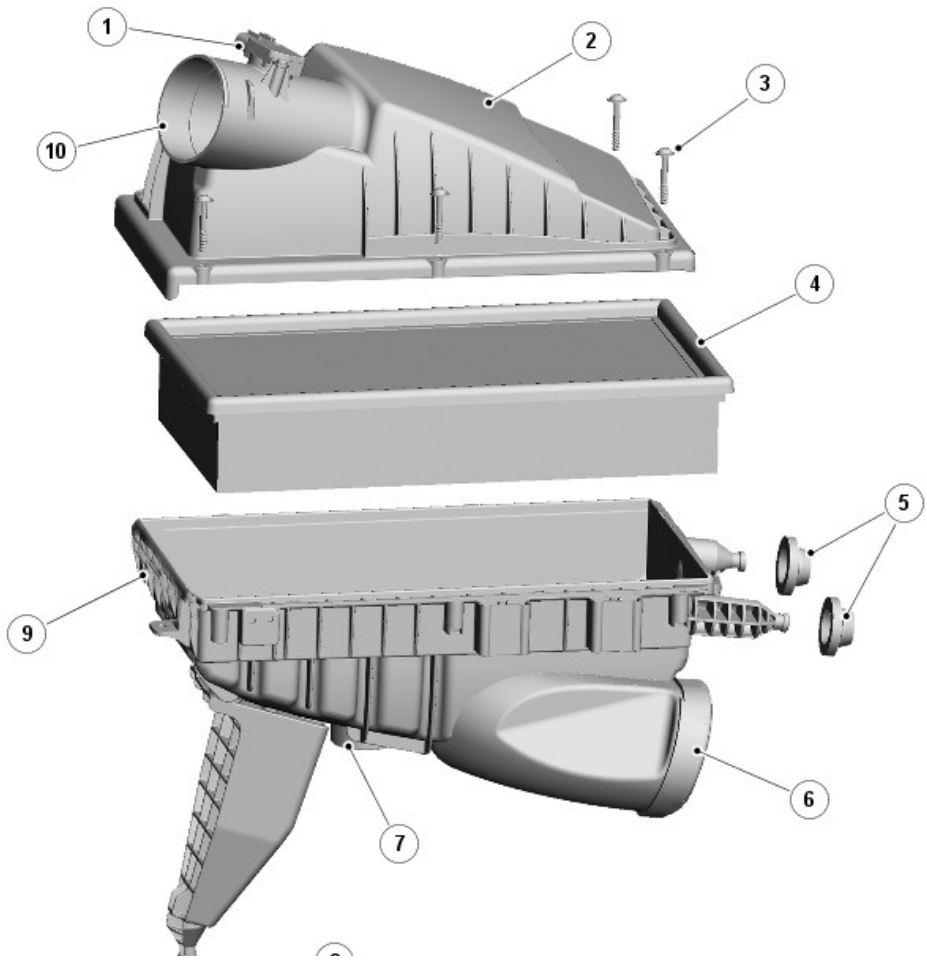

E119144

ITEM	DESCRIPTION
1	MAFT sensor
2	Cover
3	Screw (6 off)
4	Air cleaner element
5	Isolators
6	Inlet connection
7	Drain valve
8	Isolator
9	Tray
10	Outlet connection

The clean air convolutes and the clean air duct direct the air from the air cleaners into the electric throttle. Hose clamps connect the clean air convolutes and the clean air duct together, and to the air cleaners and the electric throttle.

The clean air duct also incorporates the following:

- Resonators, to reduce air induction noise.
- A connector stub for the engine full load breather pipe.

The clean air duct is supported by a bracket attached to the RH (right-hand) cylinder head.

SUPERCHARGER AND INTAKE MANIFOLDS

The SC (supercharger) increases the pressure, and thus mass, of the air supplied to the engine, to increase the engine's power output. Two separate intake manifolds direct air from the SC to the cylinder inlet ports.

The intake manifolds are attached to their related cylinder heads and the

The intake manifolds are attached to their related cylinder heads and the sides of the SC. Two dowels locate the SC in position on the cylinder block. A charge air cooler tank top is installed on top of the SC and intake manifolds to form the air duct from the SC outlet to the intake manifolds. A charge air cooler is installed in each intake manifold.

The charge air cooler tank top incorporates four studs for the attachment of the engine cover. A NVH (noise, vibration and harshness) pad is attached to the side of each intake manifold.

Supercharger and Intake Manifolds - Assembled

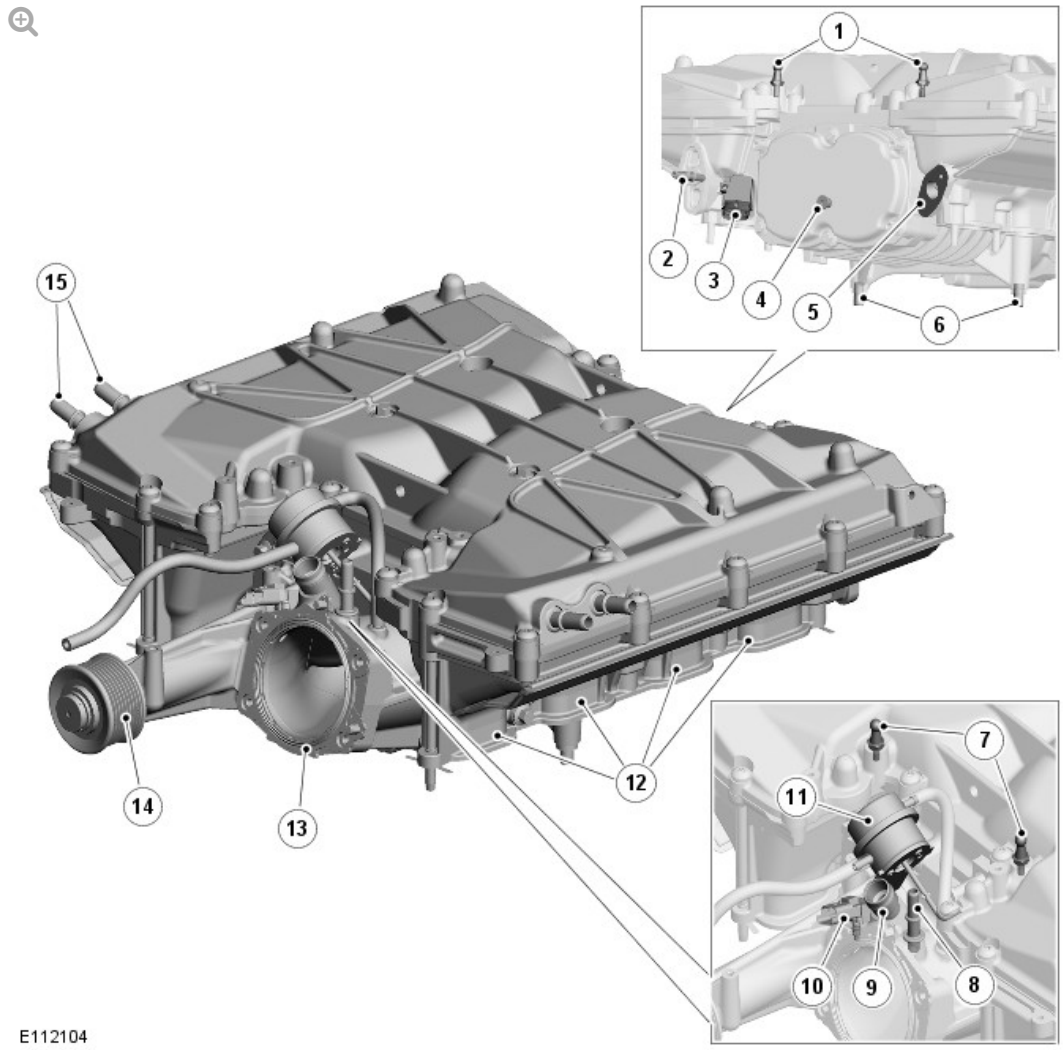

ITEM	DESCRIPTION
1	Engine cover rear attachment points
2	Vacuum connector stub
3	MAPT (manifold absolute pressure and temperature) sensor

4	SC filler/level plug
5	Symposer inlet pipe connection
6	Dowels
7	Engine cover front attachment points
8	EVAP (evaporative emissions) connector stub
9	Part load breather connector stub
10	MAP (manifold absolute pressure) sensor
11	Bypass valve pneumatic actuator
12	Outlet ports
13	Inlet port
14	Pulley
15	Coolant inlet and outlet connections

Supercharger and Intake Manifolds - Exploded

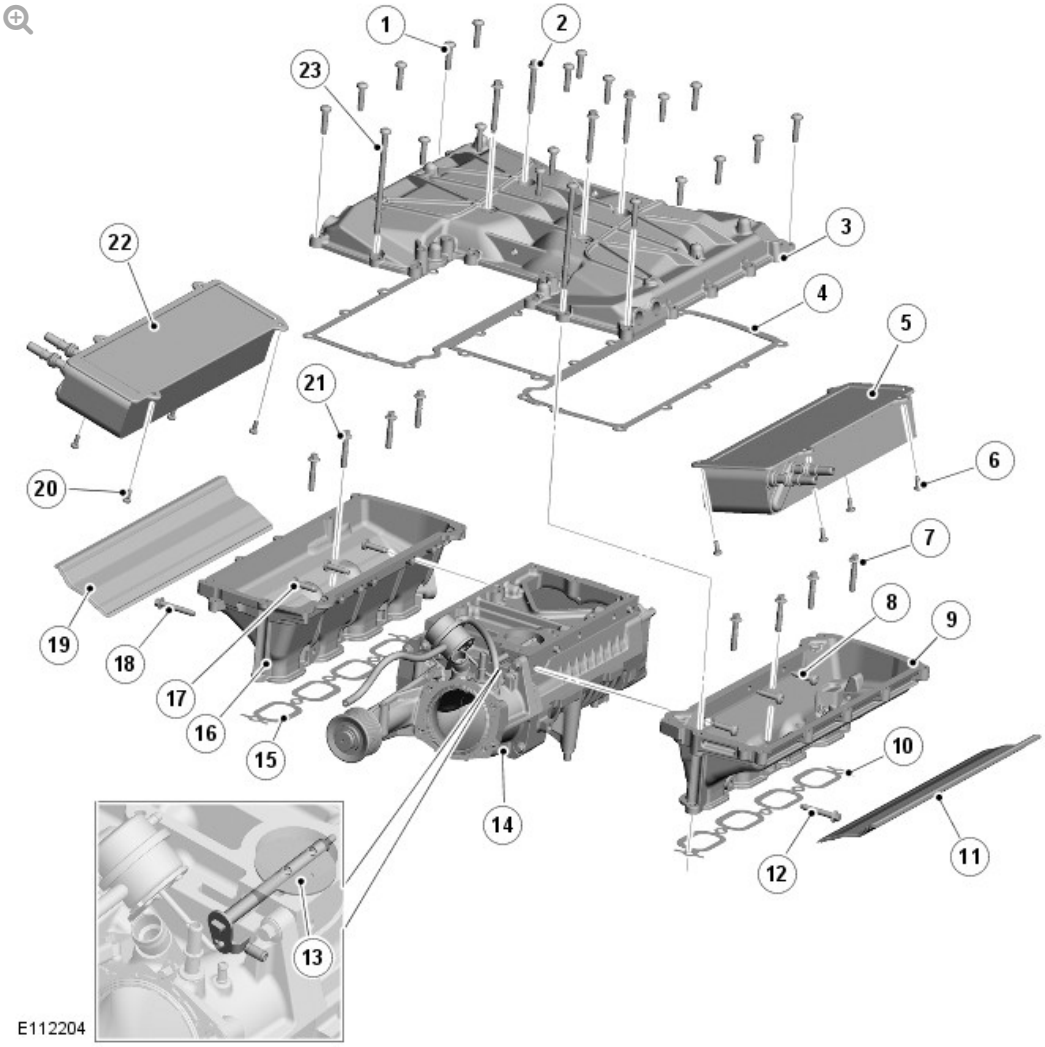

ITEM	DESCRIPTION
1	M08 x 35 mm screw (19 off)
2	M08 x 65 mm screw (4 off)
3	Charge air cooler tank top
4	Gasket
5	LH charge air cooler
6	M6 x 15 mm screw (4 off)
7	M08 x 45 mm screw (4 off)
8	M08 x 30 mm crew (3 off)
9	LH intake manifold
10	Gasket
11	NVH pad
12	M08 x 50 mm screw
13	Bypass valve
14	SC
15	Gasket
16	RH intake manifold
17	M08 x 30 mm crew (3 off)
18	M08 x 50 mm screw
19	NVH pad
20	M6 x 15 mm screw (4 off)
21	M08 x 45 mm screw (4 off)
22	RH charge air cooler
23	M08 x 150 mm screw

SUPERCHARGER

The SC is a Roots blower with high angle helix rotors driven at 2.1 x engine speed by the secondary belt of the accessory drive.

The two rotors of the SC are contained in a housing. The ends of the rotors

are supported in bearings in the front cover and the bearing plate. A rear cover seals the bearing plate and incorporates a filler/level plug for lubricant. A pulley transfers power from the accessory drive to the shaft of one of the rotors.

A pneumatic actuator on the front cover is attached to a by-pass valve in the housing. The bypass valve regulates a flow of air from the outlet of the SC back to the inlet side of the rotors, to control the outlet pressure of the SC. Hoses connect the pneumatic actuator to the throttle T-piece of the air ducts, upstream of the electric throttle, and to the front cover, downstream of the electric throttle. A lever connects the actuating rod of the pneumatic actuator to the shaft of the bypass valve. A screw in the front cover limits movement of the lever in the closed direction to allow calibration of the SC output.

The front cover also incorporates:

- The SC air inlet and mounting face for the electric throttle.
- A connector stub for the part load breather.
- A MAP (manifold absolute pressure) sensor.
- A connector stub for a hose from the EVAP (evaporative emission) canister purge valve.

INTAKE MANIFOLDS

Each intake manifold is attached to the SC with three screws and a bolt. Two dowels ensure correct alignment of each intake manifold. The RHD (right-hand drive) intake manifold incorporates a connection port for the symposer, which, although fitted, is inactive on this vehicle. The LH (left-hand) intake manifold incorporates:

- A connector stub for the brake vacuum system.
- A MAPT (manifold absolute pressure and temperature) sensor.

PRINCIPLES OF OPERATION

SUPERCHARGER

At closed or partially open throttle positions, the bypass valve is fully open,

allowing a flow of air from the SC outlet back to the inlet side. This results in little or no pressure increase across the SC. Progressive opening of the throttle reduces the depression downstream of the electric throttle. This is sensed by the pneumatic actuator, which moves to close the bypass valve. As the bypass valve closes there is a corresponding increase in the outlet pressure from the SC, which increases engine power output.

2012.0 RANGE ROVER (LM), 303-12

INTAKE AIR DISTRIBUTION AND FILTERING – V8 S/C 5.0L PETROL

DIAGNOSIS AND TESTING

PRINCIPLES OF OPERATION

For a detailed description of the intake air distribution and filtering system and operation, refer to the relevant Description and Operation section in the Workshop Manual.

INSPECTION AND VERIFICATION

CAUTION:

Diagnosis by substitution from a donor vehicle is NOT acceptable. Substitution of control modules does not guarantee confirmation of a fault, and may also cause additional faults in the vehicle being tested and/or the donor vehicle.

1. Verify the customer concern.

1. Visually inspect for obvious signs of mechanical or electrical damage.

1. Visually inspect for obvious signs of mechanical or electrical damage.

Visual Inspection

MECHANICAL	ELECTRICAL
▪ Hoses and ducts: condition and installation ▪ Air cleaner element condition and installation ▪ Restricted air intake ▪ Vacuum hoses condition and installation ▪ Pipework to/from supercharger: condition and installation ▪ Supercharger: condition and installation ▪ Charge air coolers	▪ Fuse(s) ▪ Wiring harness(es) ▪ Loose or corroded electrical connector(s) ▪ Mass air flow (MAF) sensors ▪ Manifold absolute pressure and temperature (MAPT) sensor ▪ Intake air temperature (IAT) sensor ▪ The IAT sensor is built into the right-hand MAF sensor

1. If an obvious cause for an observed or reported concern is found, correct the cause (if possible) before proceeding to the next step.

1. If the cause is not visually evident, verify the symptom and refer to the Symptom Chart, alternatively check for Diagnostic Trouble Codes (DTCs) and refer to the DTC Index.

SYMPTOM CHART

SYMPTOM	POSSIBLE CAUSES	ACTION
Vehicle does not start/hard starting	▪ Restricted/blocked air intake ▪ Restricted/blocked air cleaner element	Check the intake air system for blockages or restriction. Rectify as necessary.
Poor performance	▪ Intake air system fault ▪ Supercharger fault ▪ Low fuel pressure ▪ Restricted exhaust system	Check the intake air system for blockages or restriction. Rectify as necessary. Check for DTCs indicating a supercharger or fuel pressure fault. Rectify as necessary. Check the exhaust system for evidence of damage or restriction. Rectify as necessary.
Excessive	▪ Intake air leak after the	Check the intake air system for loose or

Excessive intake noise	▪ Intake air leak after the supercharger ▪ Intake pipe disconnected/damaged after the air cleaner ▪ Air cleaner assembly incorrectly assembled/damaged	Check the intake air system for loose or disconnected hoses or ducts. Check the hoses and ducts for damage, splits, etc. Rectify as necessary.

DTC INDEX

For a list of Diagnostic Trouble Codes (DTCs) that could be logged on this vehicle, please refer to Section 100-00. REFER to: Diagnostic Trouble Code (DTC) Index - V8 S/C 5.0L Petrol, DTC: Engine Control Module (ECM) (100-00 General Information, Description and Operation).

2012.0 RANGE ROVER (LM), 303-12

INTAKE AIR DISTRIBUTION AND FILTERING – V8 S/C 5.0L PETROL

AIR CLEANER ELEMENT [G1224274]

REMOVAL AND INSTALLATION

REMOVAL

NOTES:

- Removal steps in this procedure may contain installation details.
- Air cleaner elements must be renewed in pairs.

1. Disconnect the battery ground cable.
   Refer to: Specifications (414-00, Specifications).

2. **NOTES:**

   - Left-hand shown, right-hand similar.
   - Some variation in the illustrations may occur, but the essential information is always correct.

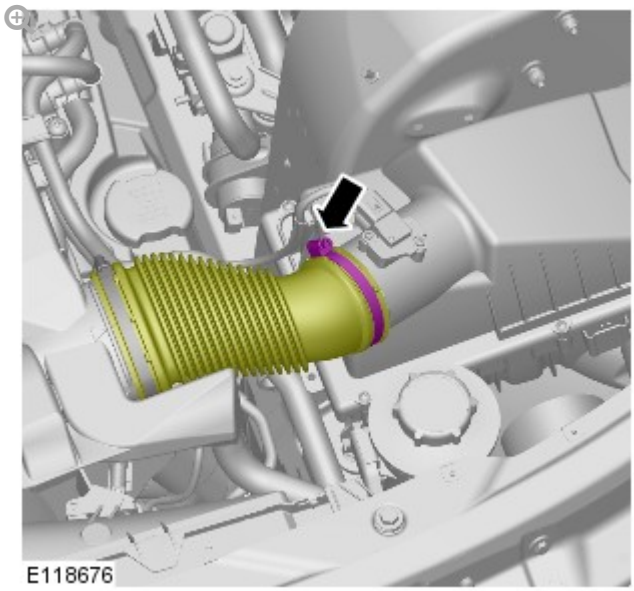

Torque: **3.5 Nm**

3.

NOTES:

- Left-hand shown, right-hand similar.
- Some variation in the illustrations may occur, but the essential information is always correct.

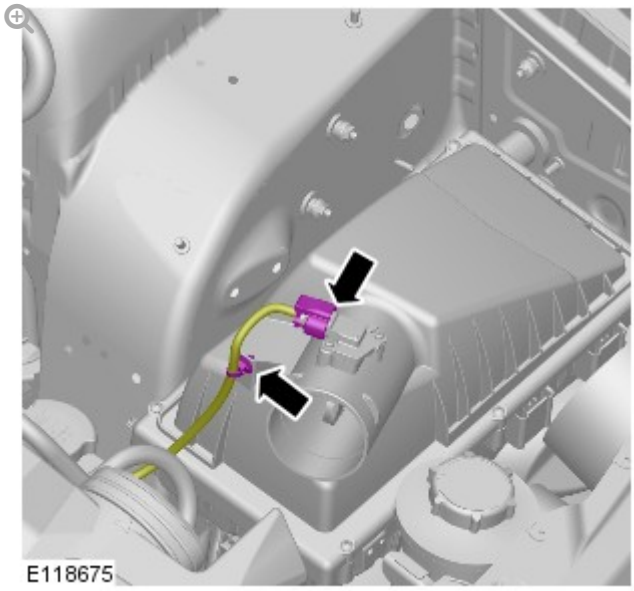

4.

NOTE:

Left-hand shown, right-hand similar.

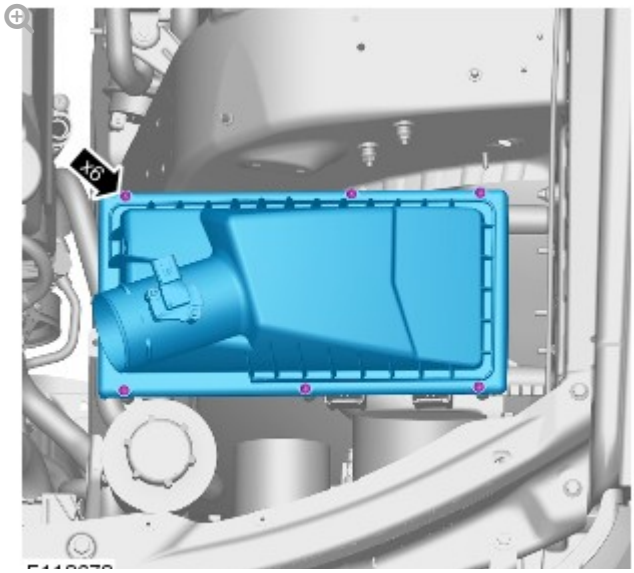

5. **NOTE:**

Right-hand shown, left-hand similar.

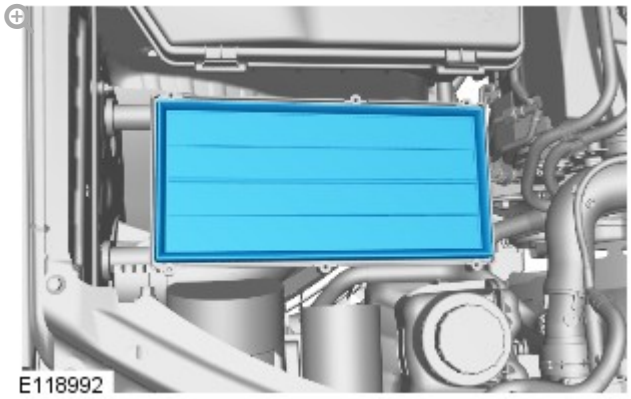

- Repeat the above procedure for the other side.

INSTALLATION

1. To install reverse the removal procedure.

2012.0 RANGE ROVER (LM), 303-12

INTAKE AIR DISTRIBUTION AND FILTERING – V8 S/C 5.0L PETROL

AIR CLEANER LH (G1224093)

REMOVAL AND INSTALLATION

19.10.03	AIR CLEANER – LH – RENEW	5000 CC, AJ V8	0.2	USED WITHINS	+

REMOVAL

NOTE:

Removal steps in this procedure may contain installation details.

1.

NOTE:

Some variation in the illustrations may occur, but the essential information is always correct.

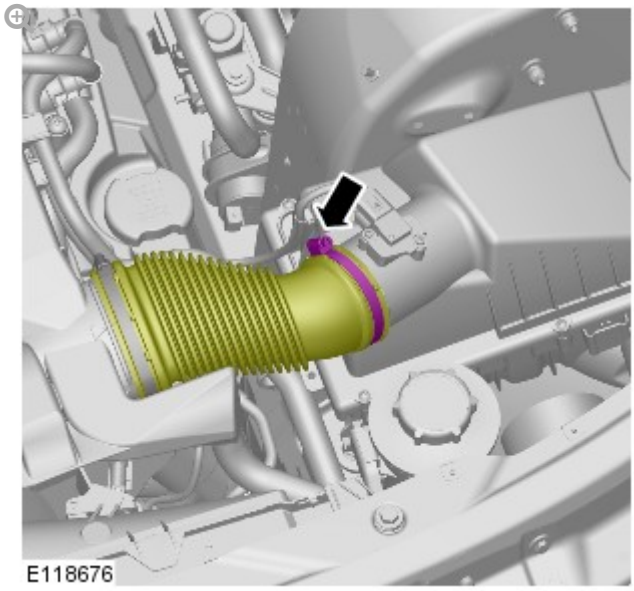

Torque: **3.5 Nm**

2.

NOTE:

Some variation in the illustrations may occur, but the essential information is always correct.

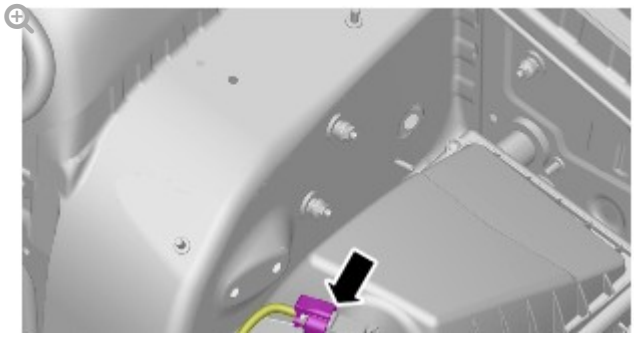

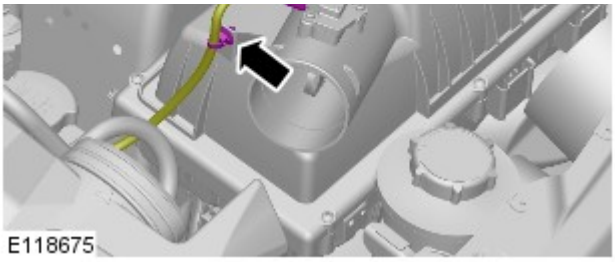

3. **NOTE:**

> Some variation in the illustrations may occur, but the essential information is always correct.

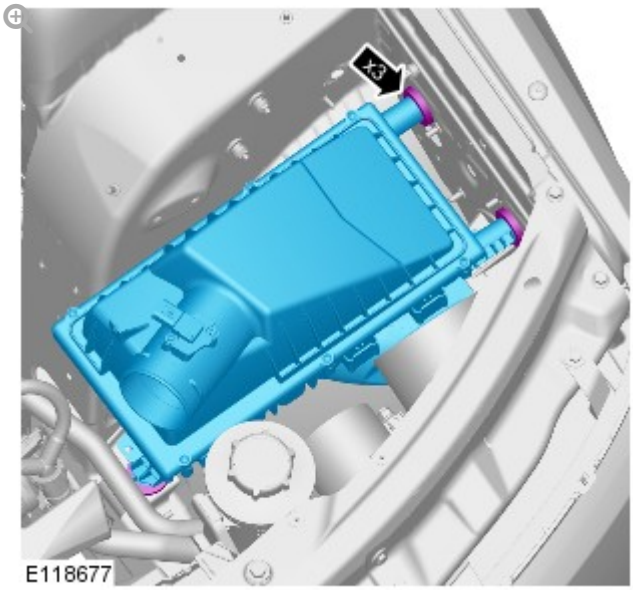

4.

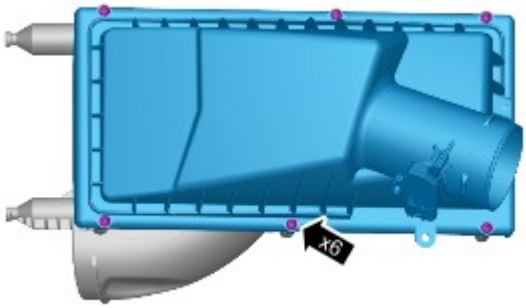

5.

E118990

INSTALLATION

1. To install reverse the removal procedure.

2012.0 RANGE ROVER (LM), 303-12

INTAKE AIR DISTRIBUTION AND FILTERING – V8 S/C 5.0L PETROL

AIR CLEANER RH (G1224094)

REMOVAL AND INSTALLATION

19.10.04	AIR CLEANER – RH – RENEW	5000 CC, AJ V8	0.3	USED WITHINS	+

REMOVAL

NOTE:

Removal steps in this procedure may contain installation details.

1. **NOTE:**

Some variation in the illustrations may occur, but the essential information is always correct.

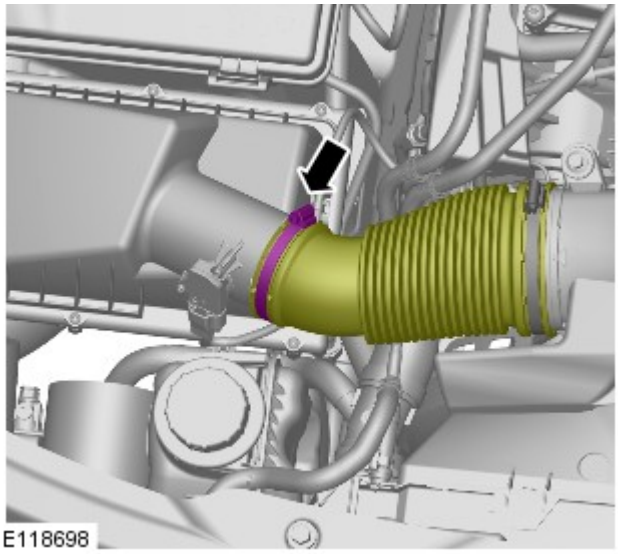

Torque: **3.5 Nm**

2. **NOTE:**

Some variation in the illustrations may occur, but the essential information is always correct.

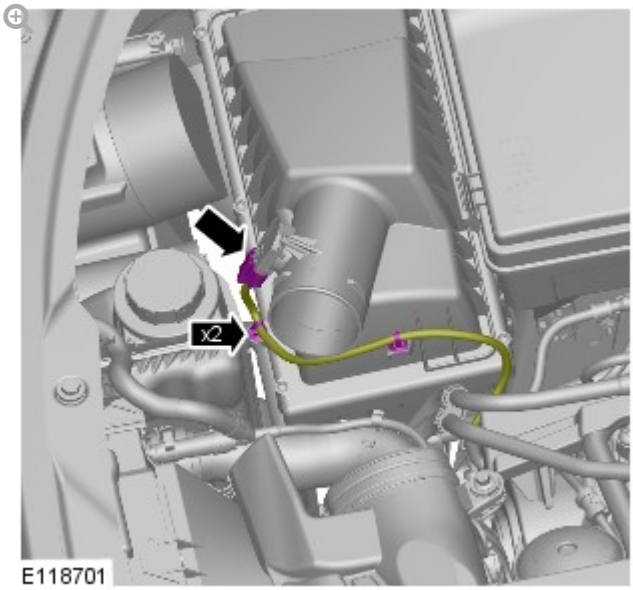

3. **NOTE:**

Some variation in the illustrations may occur, but the essential information is always correct.

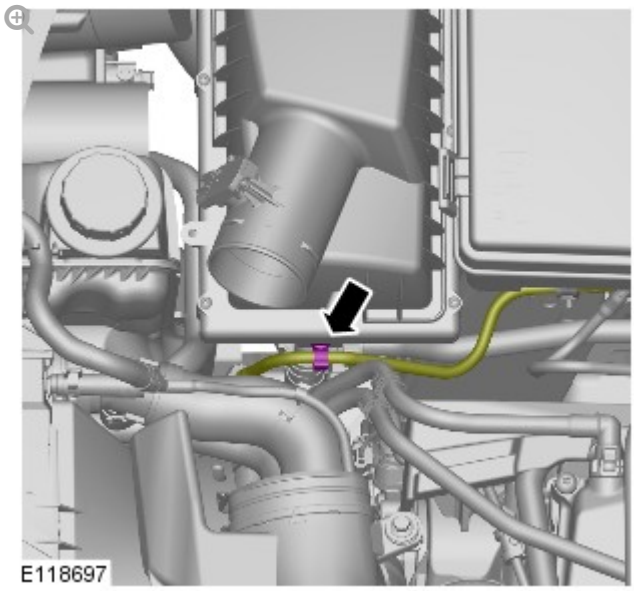

4. **NOTE:**

Some variation in the illustrations may occur, but the essential information is always correct.

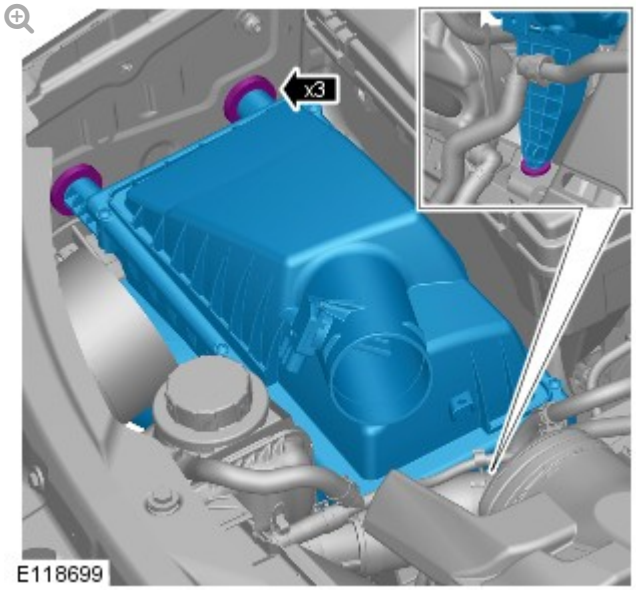

5. **NOTE:**

Do not disassemble further if the component is removed for access only.

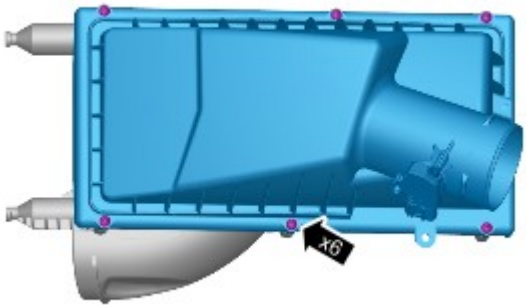

E118991

6.

E118990

INSTALLATION

1. To install reverse the removal procedure.

AIR CLEANER OUTLET PIPE LH (G1224095)

REMOVAL AND INSTALLATION

19.10.21	PIPE – AIR CLEANER OUTLET – LH – RENEW	5000 CC, AJ V8	0.1	USED WITHINS	+

REMOVAL

NOTE:

Removal steps in this procedure may contain installation details.

1. Refer to: Engine Cover - 5.0L (501-05, Removal and Installation).

2.

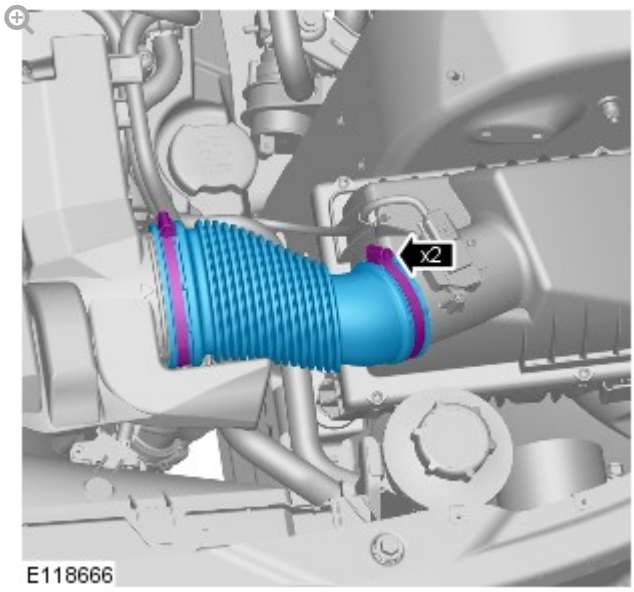

Torque: **3.5 Nm**

INSTALLATION

INSTALLATION

1. To install reverse the removal procedure.

2012.0 RANGE ROVER (LM), 303-12

INTAKE AIR DISTRIBUTION AND FILTERING – V8 S/C 5.0L PETROL

AIR CLEANER OUTLET PIPE RH (G1224096)

REMOVAL AND INSTALLATION

19.10.22	PIPE – AIR CLEANER OUTLET – RH – RENEW	5000 CC, AJ V8	0.1	USED WITHINS	+

REMOVAL

NOTE:

Removal steps in this procedure may contain installation details.

1. Refer to: Engine Cover - 5.0L (501-05, Removal and Installation).

2. 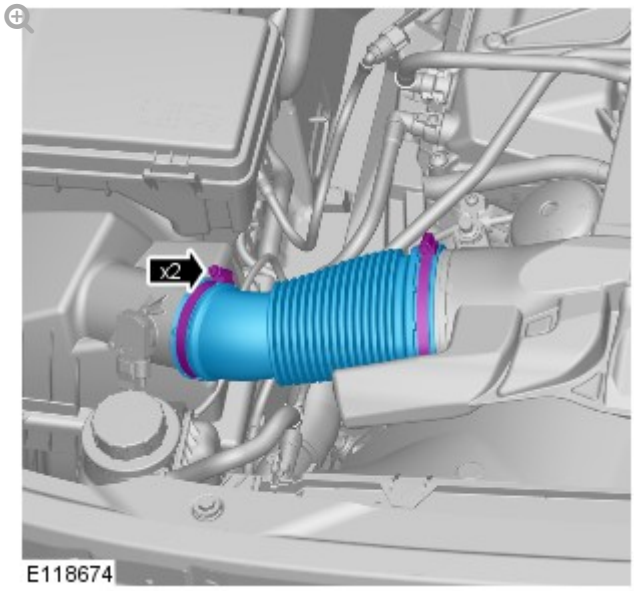

   Torque: **3.5 Nm**

INSTALLATION

1. To install reverse the removal procedure.

2012.0 RANGE ROVER (LM), 303-12

INTAKE AIR DISTRIBUTION AND FILTERING – V8 S/C 5.0L PETROL

AIR CLEANER OUTLET PIPE T–CONNECTOR (G1224059)

REMOVAL AND INSTALLATION

19.10.24	T–CONNECTOR – AIR CLEANER OUTLET PIPE – RENEW	5000 CC, AJ V8, SUPERCHARGED	0.2	USED WITHINS	+

REMOVAL

NOTE:

Removal steps in this procedure may contain installation details.

1. Refer to: Engine Cover - 5.0L (501-05, Removal and Installation).

2.

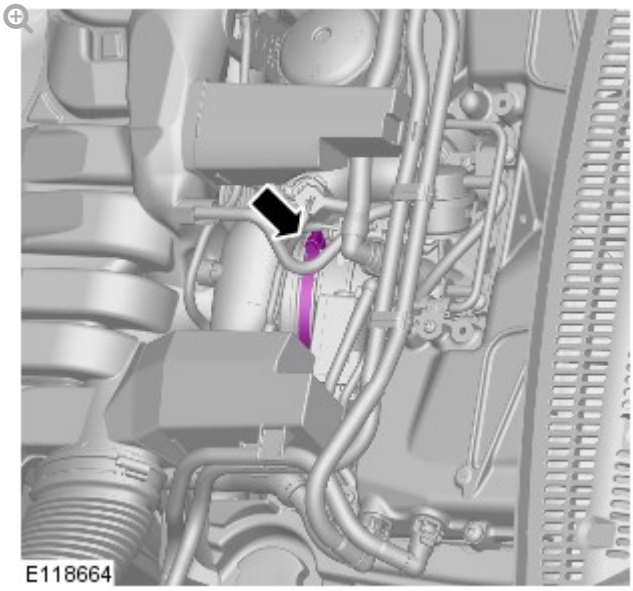

Torque: **3.5 Nm**

3.

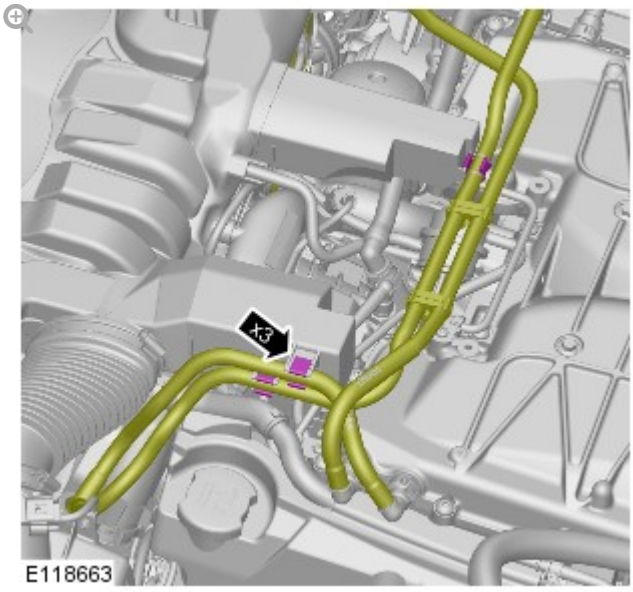

4.

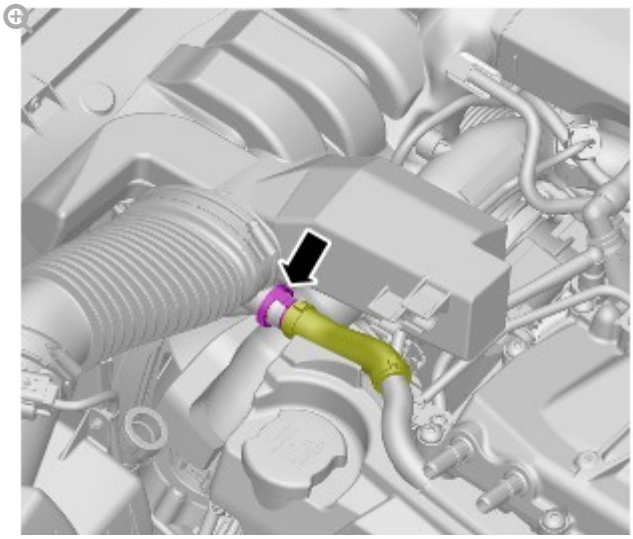

5.

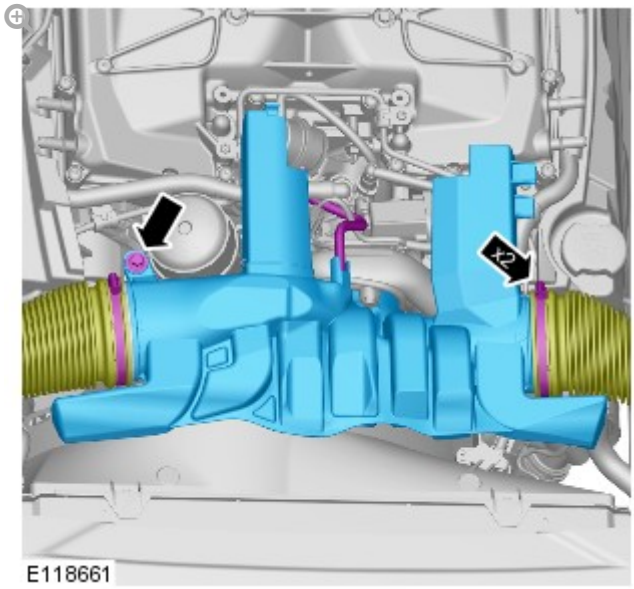

Torque:

M6 **10 Nm**

3.5 Nm

INSTALLATION

1. To install, reverse the removal procedure.

CHARGE AIR COOLER (G1223972)

REMOVAL AND INSTALLATION

REMOVAL

NOTE:

Removal steps in this procedure may contain installation details.

1. Disconnect the battery ground cable.
   Refer to: Specifications (414-00 Battery and Charging System - General Information, Specifications).

2. **WARNING:**

   Make sure to support the vehicle with axle stands.

   Raise and support the vehicle.

3. Refer to: Cooling System Partial Draining and Vacuum Filling (303-03B Engine Cooling - TDV8 4.4L Diesel, General Procedures).

4. Refer to: Engine Cover - V8 5.0L Petrol/V8 S/C 5.0L Petrol (501-05 Interior Trim and Ornamentation, Removal and Installation).

5. Refer to: Plenum Chamber (412-01A Air Distribution and Filtering, Removal and Installation).

6. Refer to: Fuel Injection Component Cleaning (303-04D Fuel Charging and Controls - V8 5.0L Petrol, General Procedures).

7. Refer to: Fuel System Pressure Release - V8 5.0L Petrol/V8 S/C 5.0L Petrol (310-00 Fuel System - General Information, General Procedures).

8.

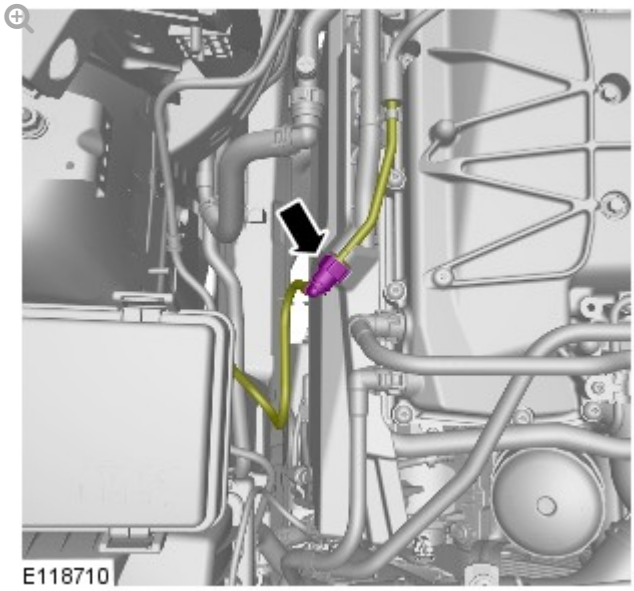

9.

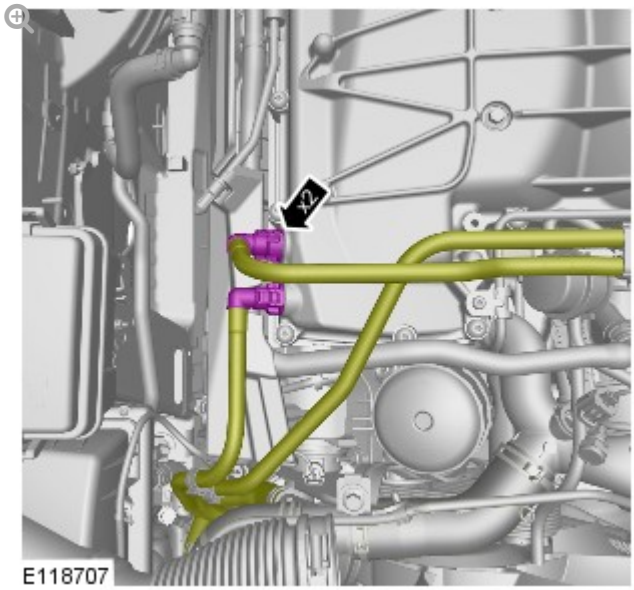

10.

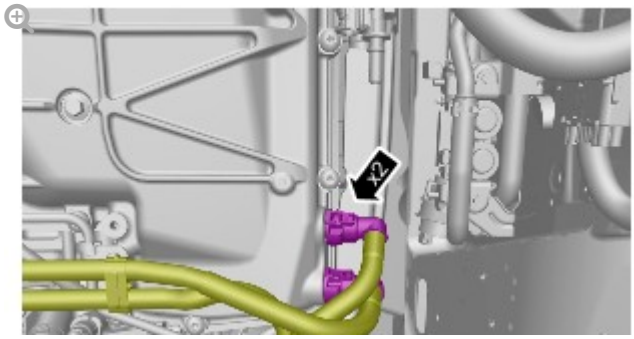

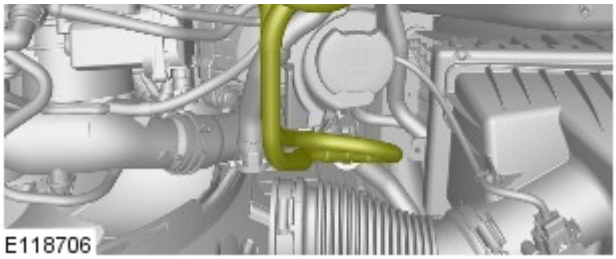

11.

CAUTION:

Be prepared to collect escaping fluids.

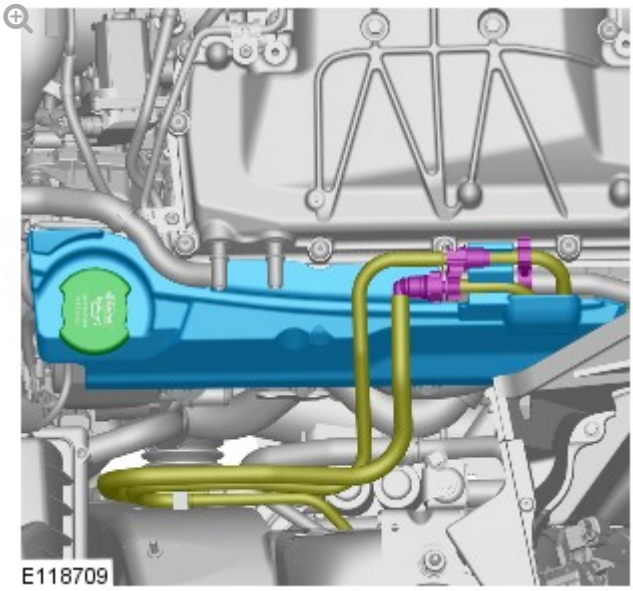

12.

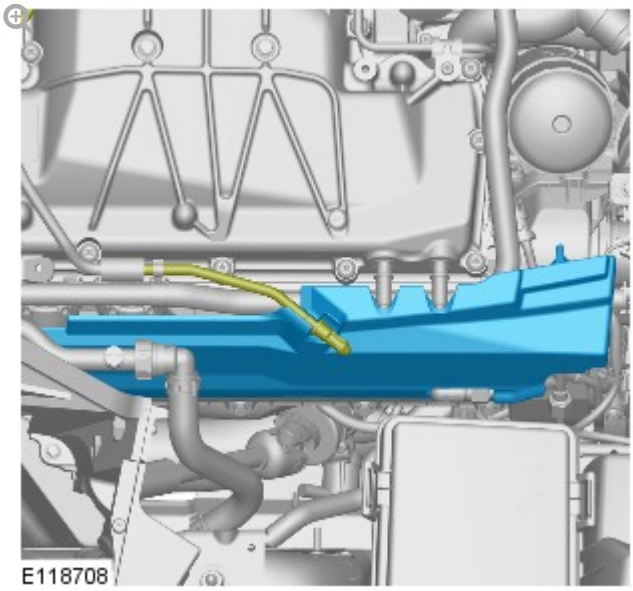

13.

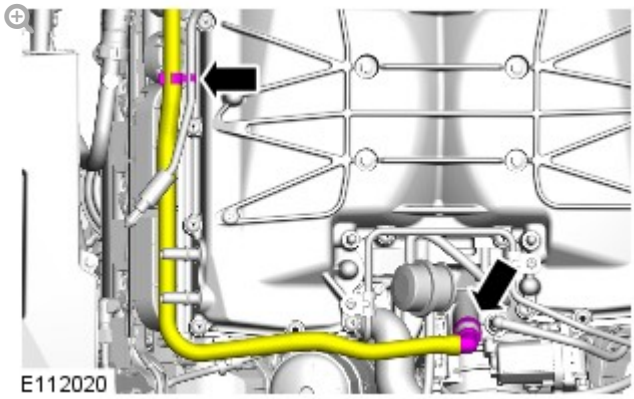

14.

WARNING:

Do not smoke or carry lighted tobacco or open flame of any type when working on or near any fuel related components. Highly flammable vapors are always present and may ignite. Failure to follow these instructions may result in personal injury.

CAUTIONS:

- Make sure that the fuel line union does not rotate.
- Be prepared to collect escaping fluids.
- Make sure that all openings are sealed. Use new blanking caps.

NOTE:

Some variation in the illustrations may occur, but the essential information is always correct.

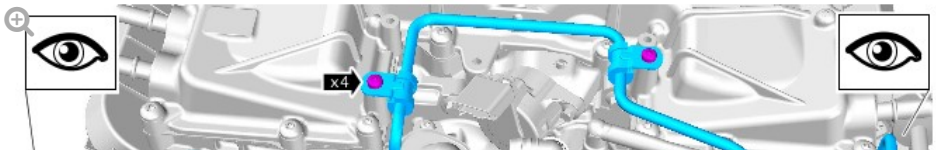

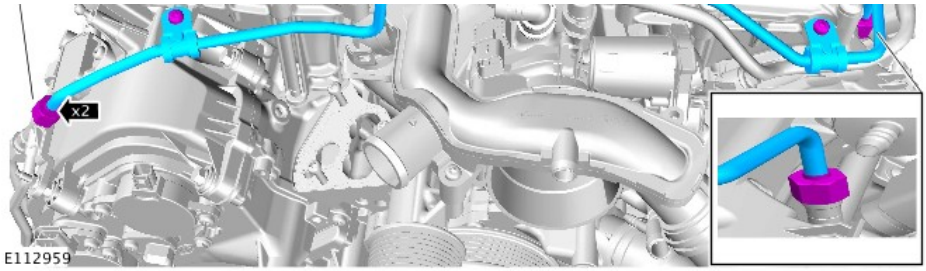

15.

NOTE:

Some variation in the illustrations may occur, but the essential information is always correct.

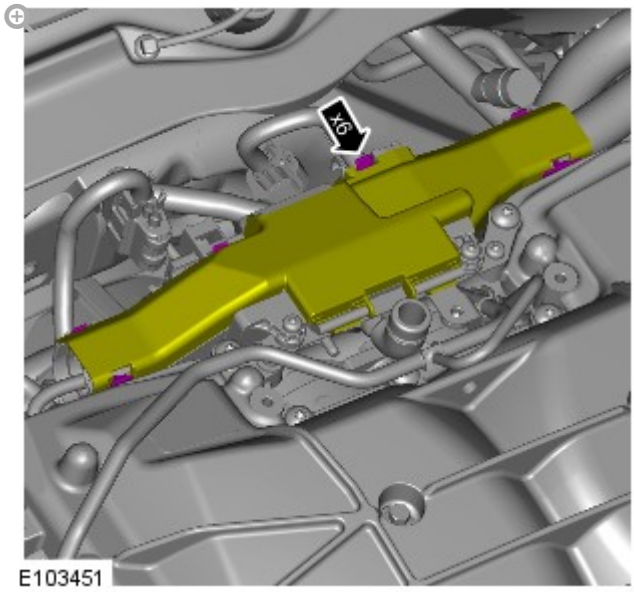

16.

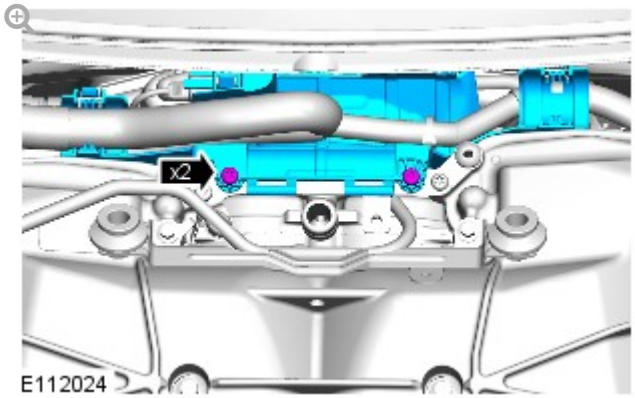

Torque: **10 Nm**

17.

17.

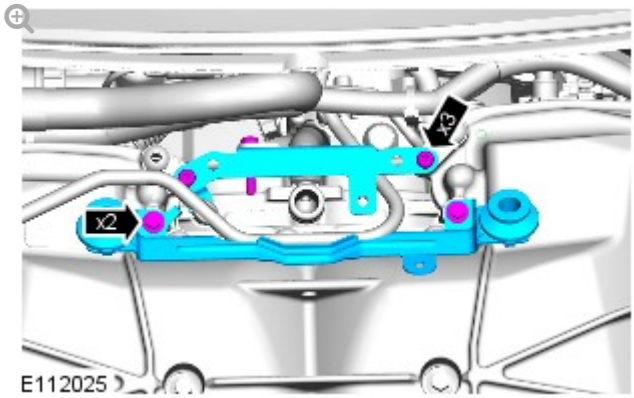

Torque: **10 Nm**

18.

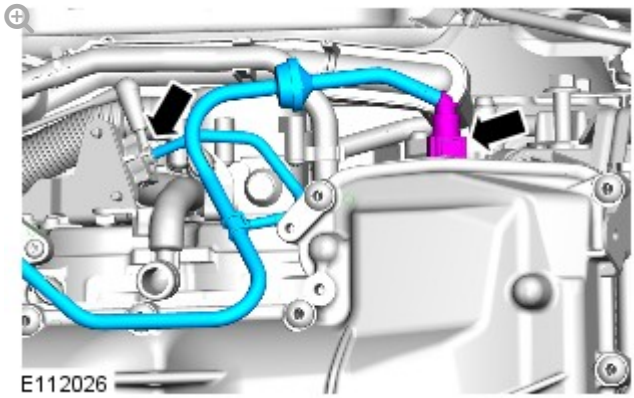

19.

NOTE:

Remove and discard the gasket.

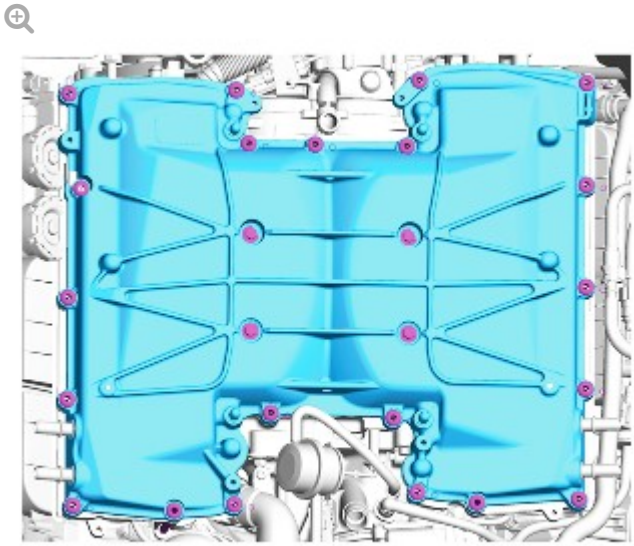

INSTALLATION

1. To install, reverse the removal procedure.

2. **NOTES:**

- Install and finger tighten bolts in sequence illustrated.
- Tighten the bolts in the indicated sequence.
- Install a new gasket.

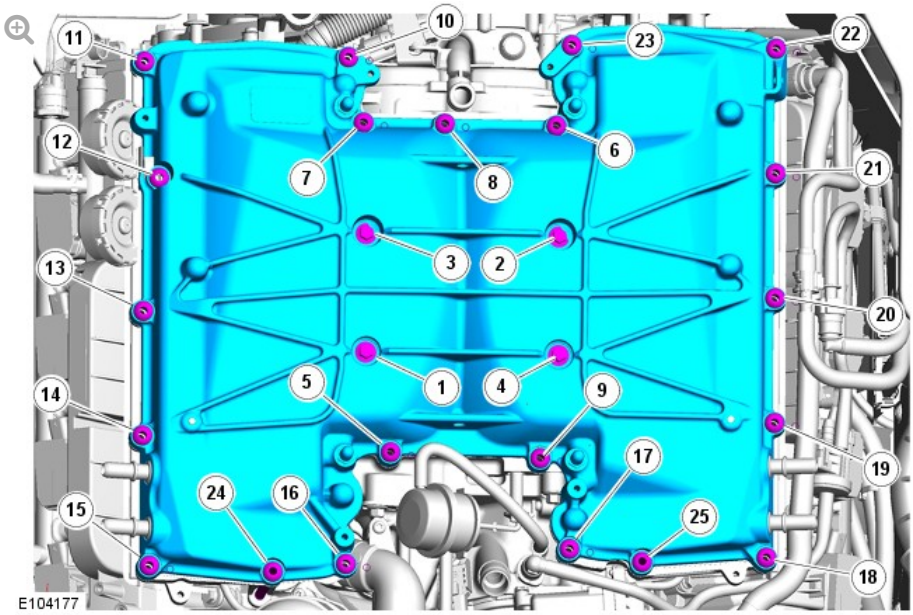

Torque: **25 Nm**

3. **WARNING:**

Do not smoke or carry lighted tobacco or open flame of any type when working on or near any fuel related components. Highly flammable vapors are always present and may ignite. Failure to follow these instructions may result in personal injury.

CAUTION:

Lubricate only the union threads with clean engine oil.

NOTES:

- Do not tighten at this stage.
- Remove and discard the blanking caps.
- Some variation in the illustrations may occur, but the essential information is always correct.

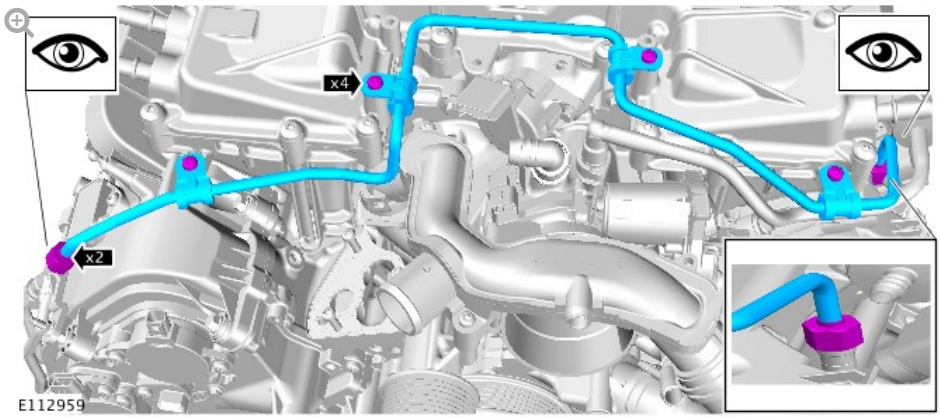

4.

WARNING:

Do not smoke or carry lighted tobacco or open flame of any type when working on or near any fuel related components. Highly flammable vapors are always present and may ignite. Failure to follow these instructions may result in personal injury.

NOTE:

Some variation in the illustrations may occur, but the essential information is always correct.

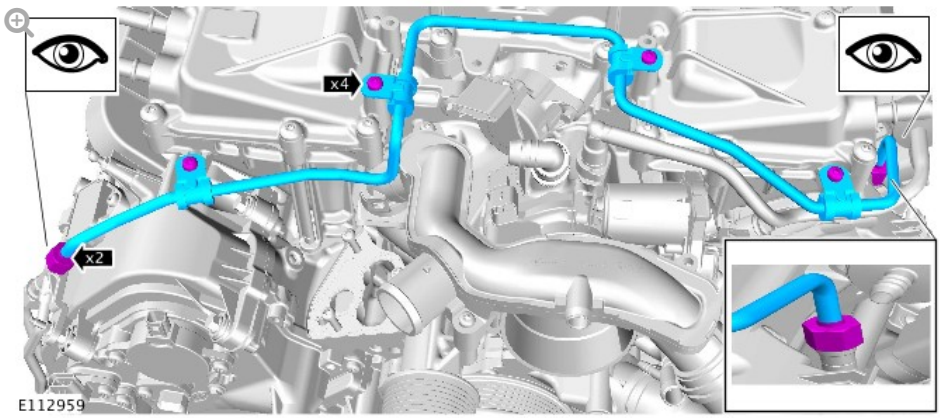

Torque:

Union **21 Nm**

M6 **12 Nm**

5.

WARNINGS:

- Do not smoke or carry lighted tobacco or open flame of any type when working on or near any fuel related components. Highly flammable vapors are always present and may ignite. Failure to follow these instructions may result in personal injury.
- After carrying out repairs, the fuel system must be checked visually for leaks. Failure to follow these instructions may result in personal injury.

NOTE:

Some variation in the illustrations may occur, but the essential information is always correct.

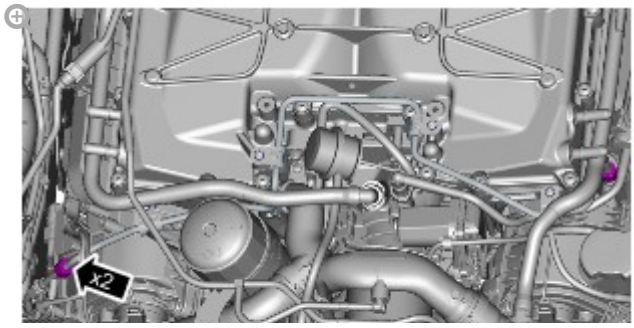

Torque: **21 Nm**

2012.0 RANGE ROVER (LM), 303-12

INTAKE AIR DISTRIBUTION AND FILTERING – V8 S/C 5.0L PETROL

SUPERCHARGER (G1223973)

REMOVAL AND INSTALLATION

19.46.15	SUPERCHARGER ASSEMBLY – RENEW	5000 CC, AJ V8, SUPERCHARGED	3.5	USED WITHINS	+

SPECIAL TOOL(S)

303-1449-01

Supercharger Installation Guide Pins - Threaded

303-1449-02

Supercharger Installation Guide Pins - Unthreaded

REMOVAL

CAUTION:

If a new cylinder head has been installed, then new taptite bolts must be used to install the supercharger.

NOTES:

- New taptite bolts when used cut their own threads on the first application.

- Removal steps in this procedure may contain installation details.

1. **WARNING:**

   Make sure to support the vehicle with axle stands.

   Raise and support the vehicle.

2. Refer to: Supercharger Belt (303-05C Accessory Drive - V8 5.0L Petrol/V8 S/C 5.0L Petrol, Removal and Installation).

3. Refer to: Throttle Body (303-04E Fuel Charging and Controls - V8 S/C 5.0L Petrol, Removal and Installation).

4. Refer to: Charge Air Cooler (303-12D Intake Air Distribution and Filtering - V8 S/C 5.0L Petrol, Removal and Installation).

5. 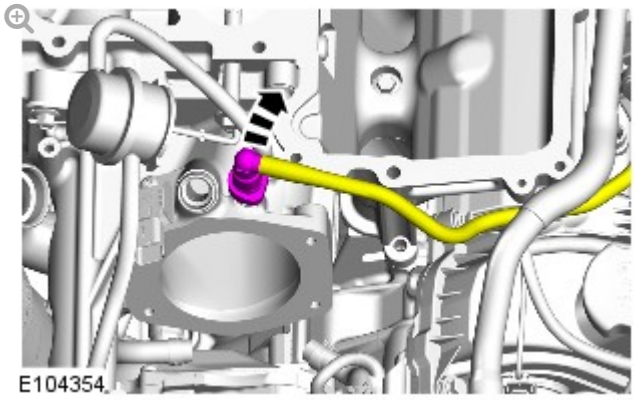

6. 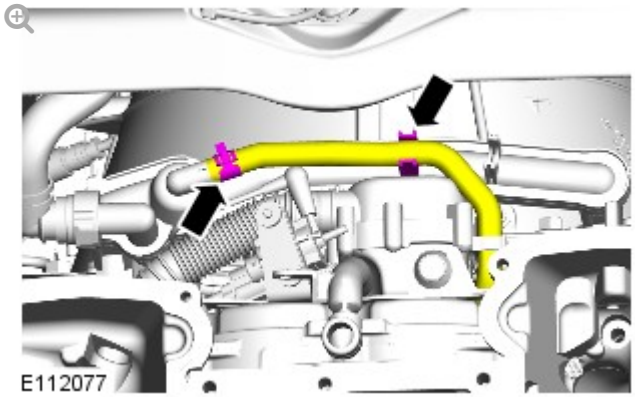

7.

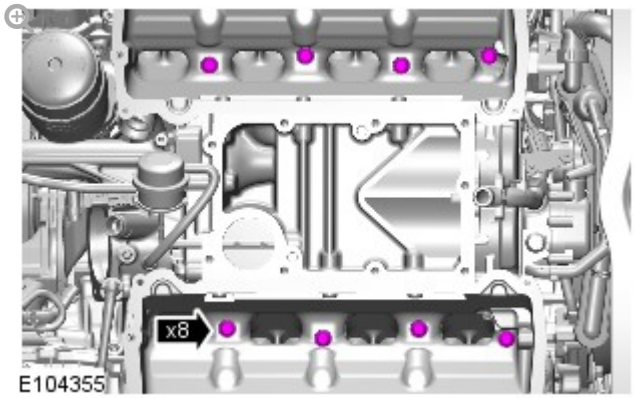

8.

NOTE:

Detatch component but do not remove at this stage.

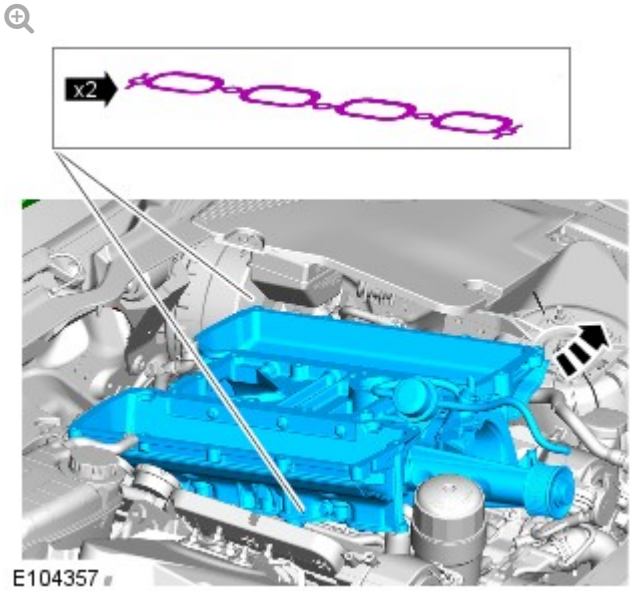

Discard the gaskets.

9.

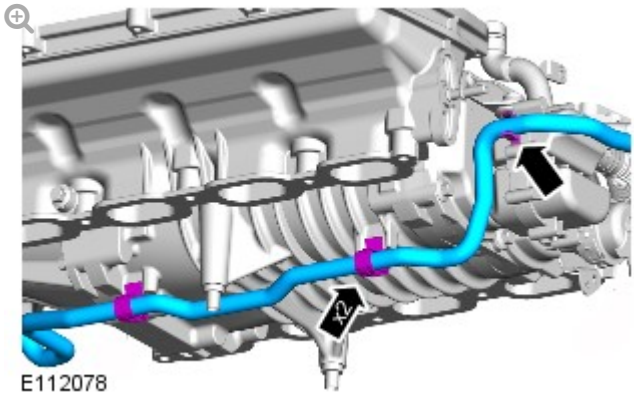

10.

CAUTION:

Make sure the wiring harness and electrical connectors are not damaged during this operation.

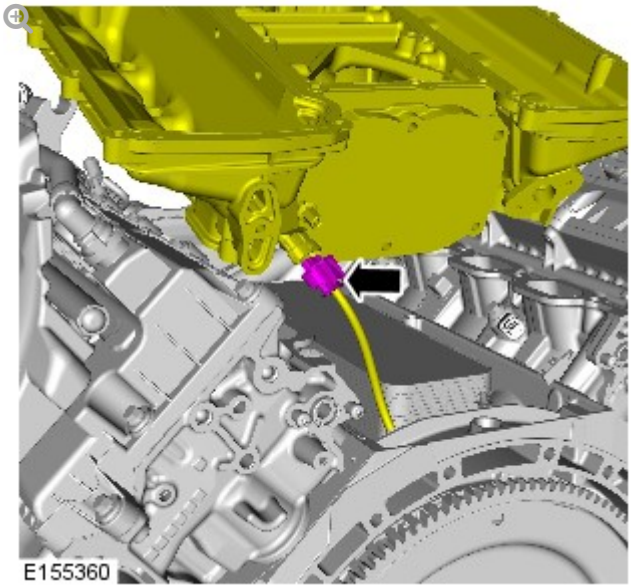

11.

NOTE:

Do not disassemble further if the component is removed for access only.

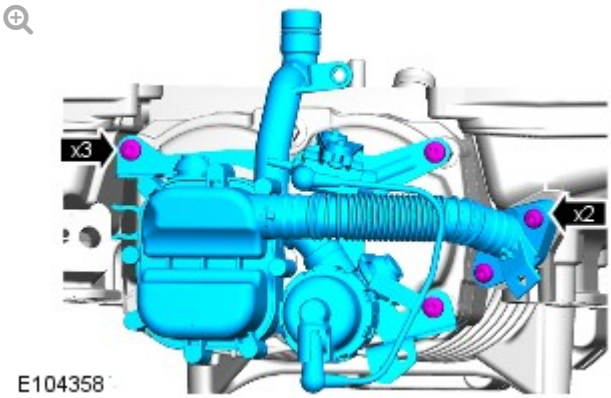

12.

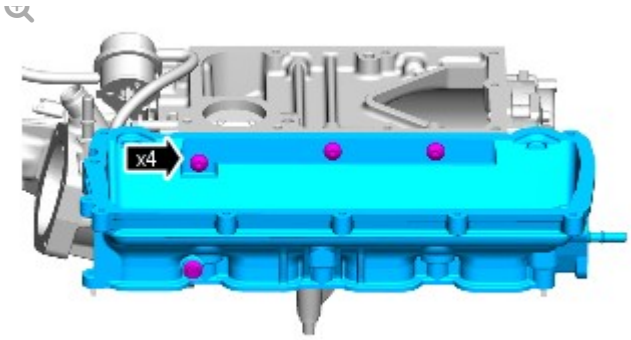

E104360

Torque: **25 Nm**

13.

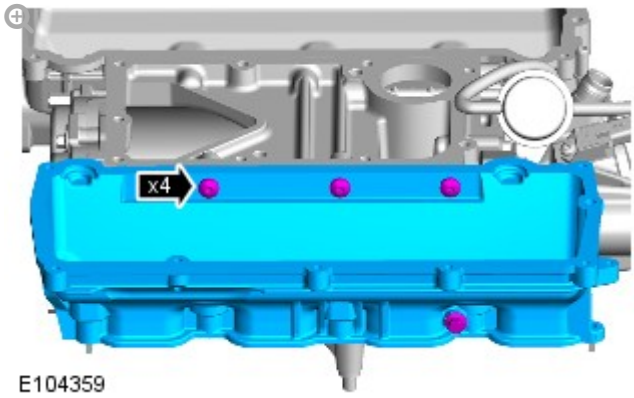

E104359

INSTALLATION

CAUTION:

If a new cylinder head has been installed, then new taptite bolts must be used to install the supercharger.

NOTE:

New taptite bolts when used cut their own threads on the first application.

1.

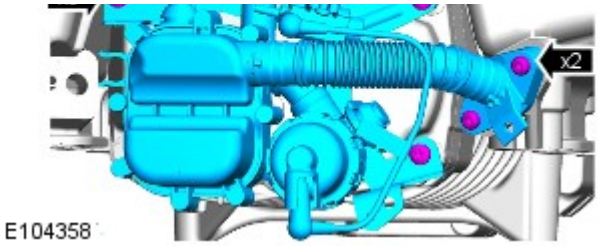

Torque: **10 Nm**

2.

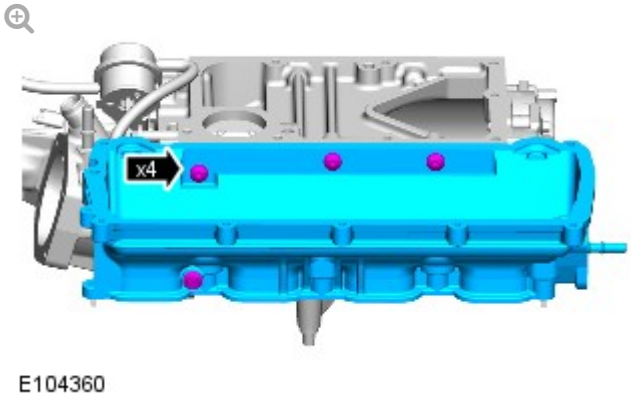

Torque: **25 Nm**

3.

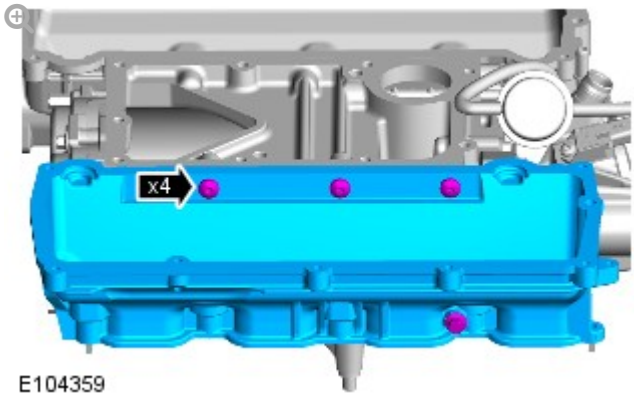

Torque: **25 Nm**

4.

CAUTIONS:

- If a new cylinder head has been installed then the special tool 303-1449-02 without the thread must be used to install the supercharger.
- If a new cylinder head has been installed, then new taptite bolts must be used to install the supercharger.

NOTE:

New taptite bolts when used cut their own threads on the first application.

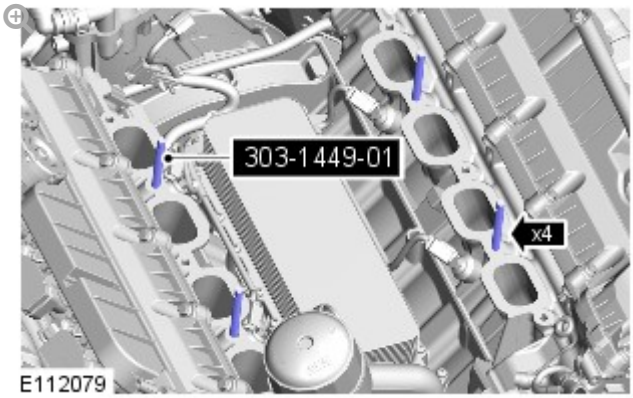

- *Special Tool(s):* 303-1449-01
- *Special Tool(s):* 303-1449-02

5. CAUTION:

Make sure that the mating faces are clean and free of foreign material.

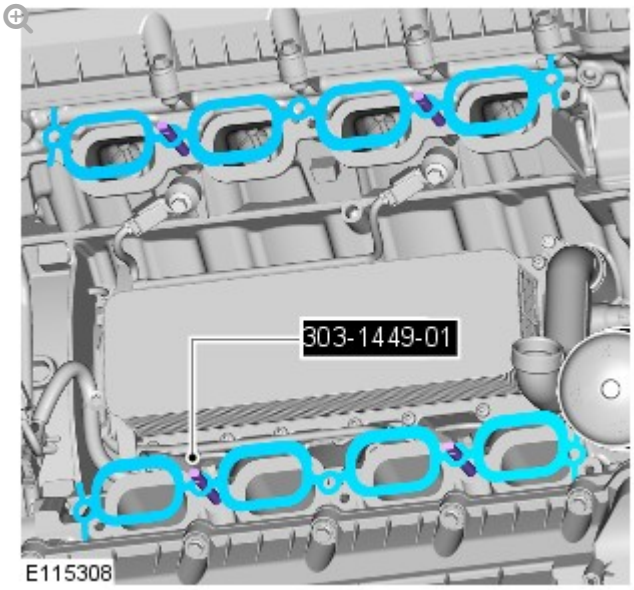

- Install new gaskets.

6.

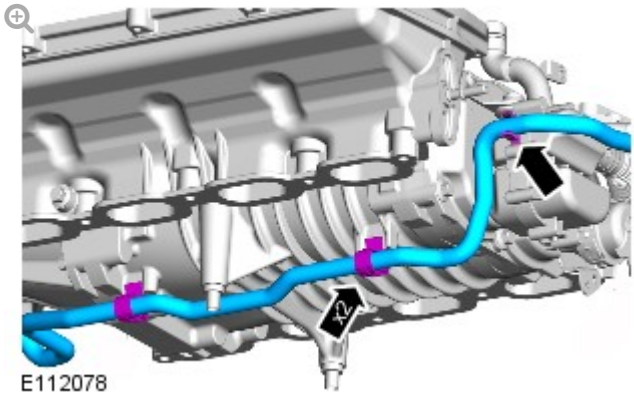

7.

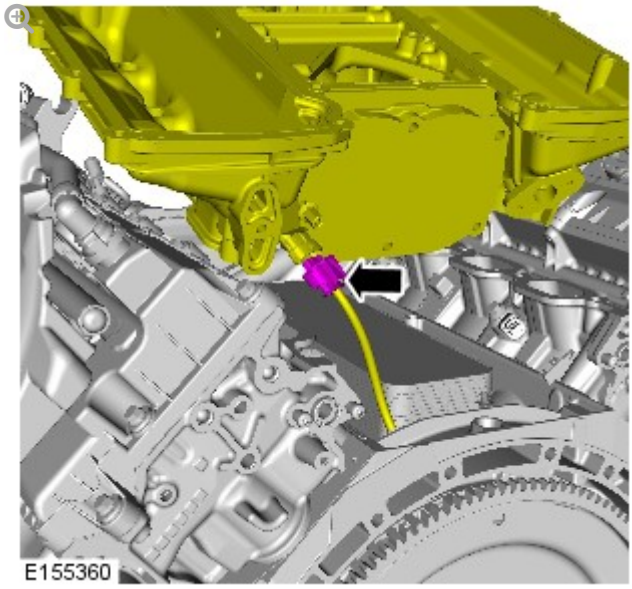

8.

CAUTION:

Make sure that the mating faces are clean and free of foreign material.

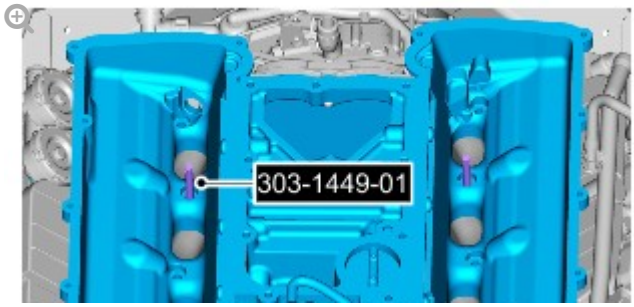

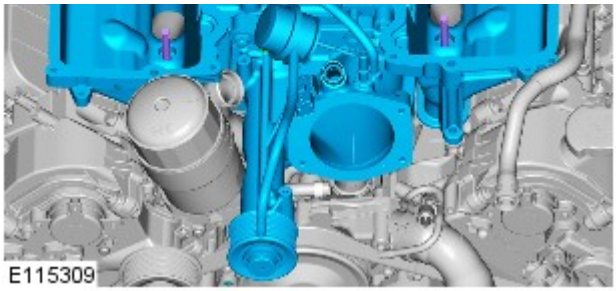

9. **CAUTION:**

If a new cylinder head has been installed then the special tool 303-1449-02 without the thread must be used to install the supercharger.

NOTE:

Left-hand shown, right-hand similar.

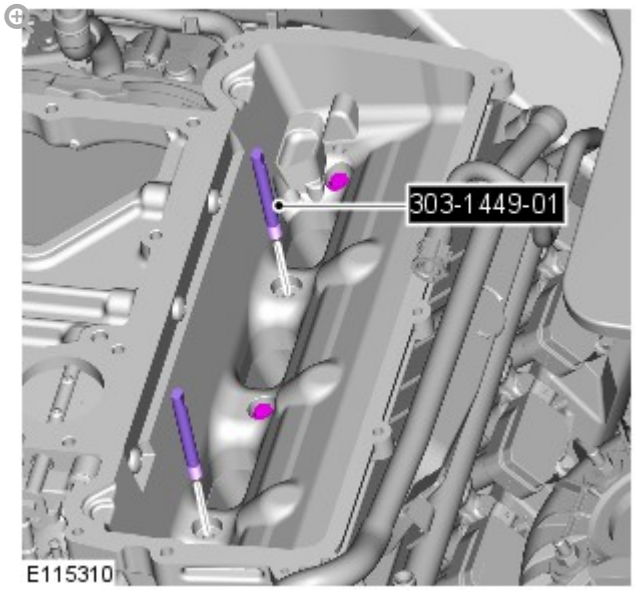

Torque: **25 Nm**

10. **NOTE:**

Left-hand shown, right-hand similar.

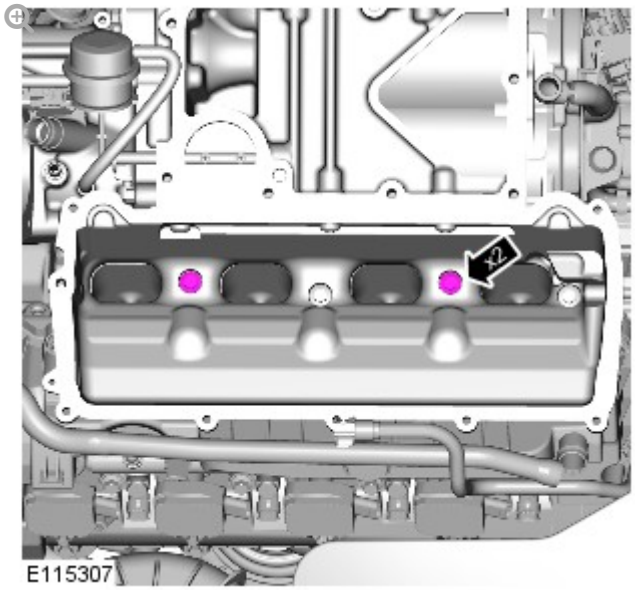

Torque: **25 Nm**

11.

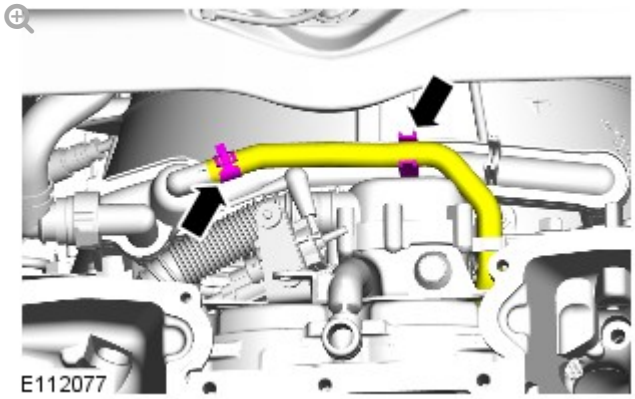

12.

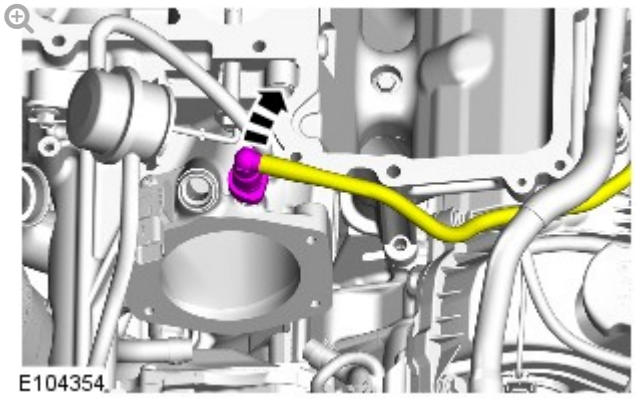

13. Refer to: Charge Air Cooler (303-12D Intake Air Distribution and Filtering - V8 S/C 5.0L Petrol, Removal and Installation).

14. Refer to: Throttle Body (303-04E Fuel Charging and Controls - V8 S/C 5.0L Petrol, Removal and Installation).

15. Refer to: Supercharger Belt (303-05C Accessory Drive - V8 5.0L Petrol/V8 S/C 5.0L Petrol, Removal and Installation).

SUPERCHARGER SPRING ISOLATOR (G1702598)

REMOVAL AND INSTALLATION

REMOVAL

CAUTION:

Make sure that all open ports are covered to prevent any foreign material ingress.

NOTE:

Some variation in the illustrations may occur, but the essential information is always correct.

1. **WARNING:**

> Make sure to support the vehicle with axle stands.

Raise and support the vehicle.

2. Refer to: Supercharger (303-12D Intake Air Distribution and Filtering - V8 S/C 5.0L Petrol, Removal and Installation).

3.

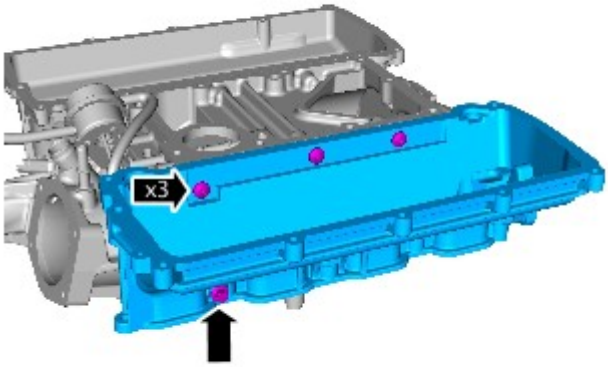

E160352

4. **NOTES:**

- Note the orientation prior to removal.
- Hoses must be cut off to prevent damage to the actuator.

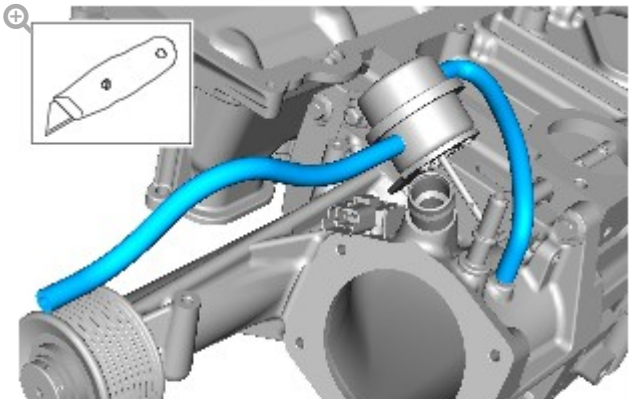

E160350

5.

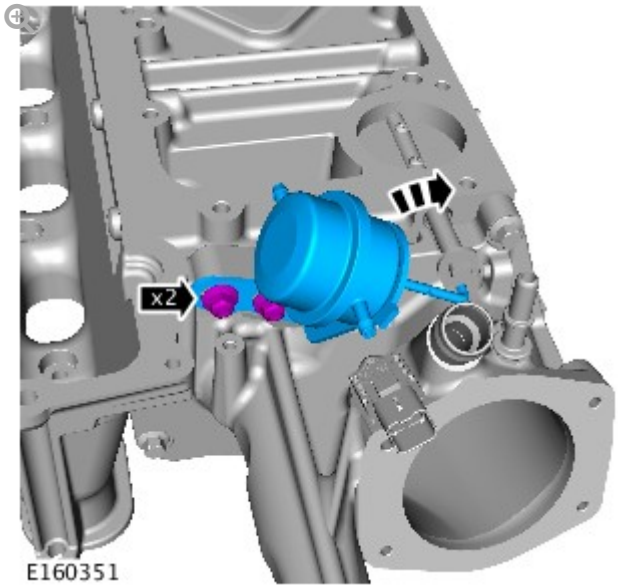

E160351

6.

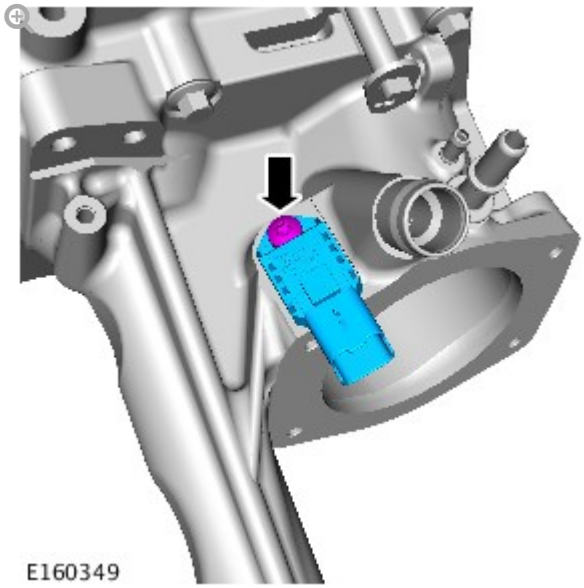

E160349

7.

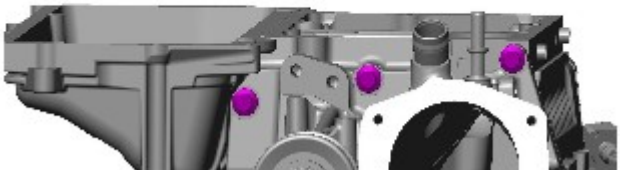

E160344

8. **CAUTION:**

Make sure the actuator arm is rotated to allow the front cover to be removed. Failure to follow this instruction may result in damage to the component.

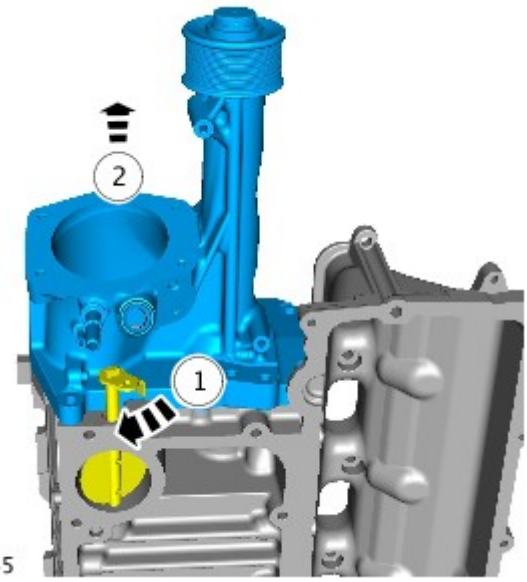

E160345

9. **CAUTION:**

Make sure that all open ports are covered to prevent any foreign material ingress.

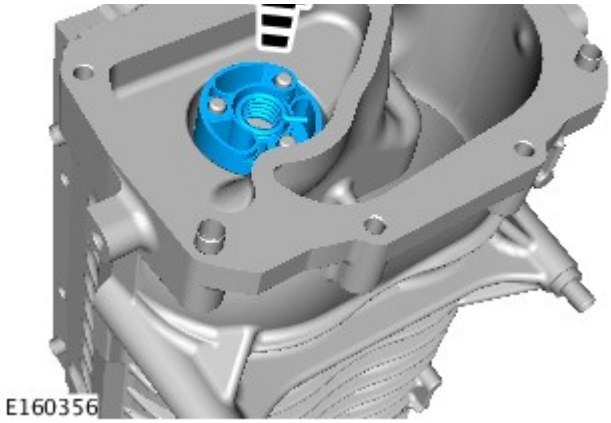

10.

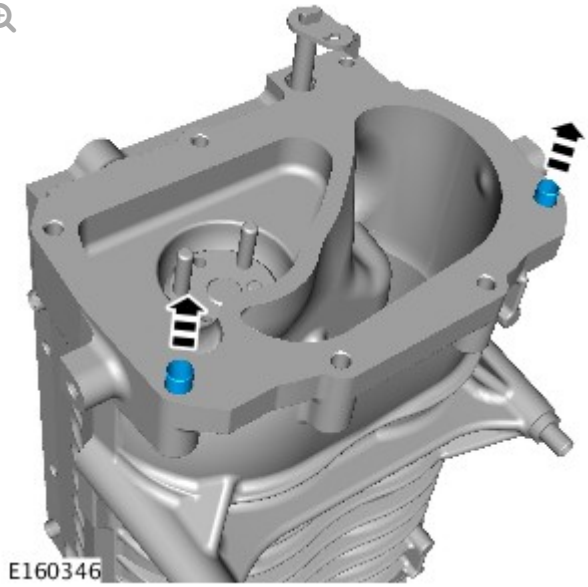

11.

CAUTION:

Make sure that all open ports are covered to prevent any foreign material ingress.

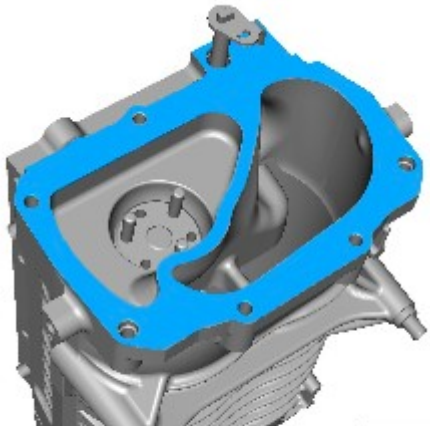

INSTALLATION

1. **CAUTION:**

Make sure that all open ports are covered to prevent any foreign material ingress.

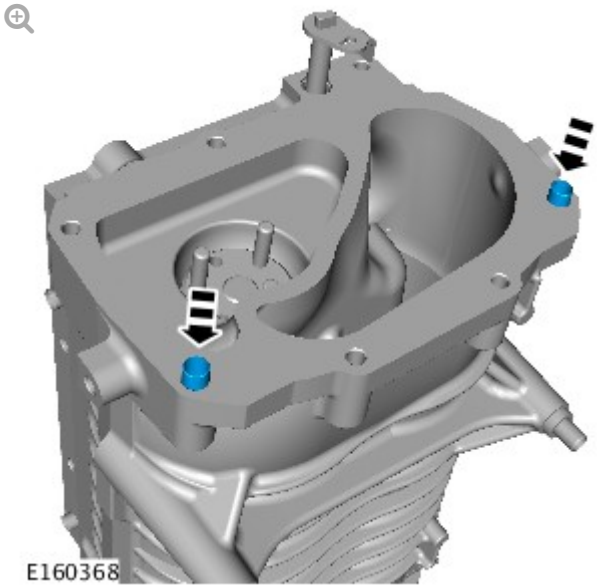

2. **CAUTION:**

Apply a continuous bead of gasket sealant as shown on the illustration. The application of the sealant must be 1mm diameter. Install the component immediately after applying the sealant without smearing the sealant.

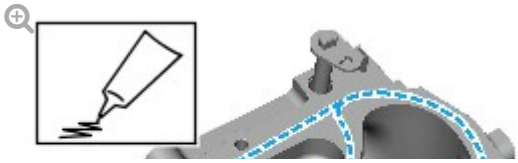

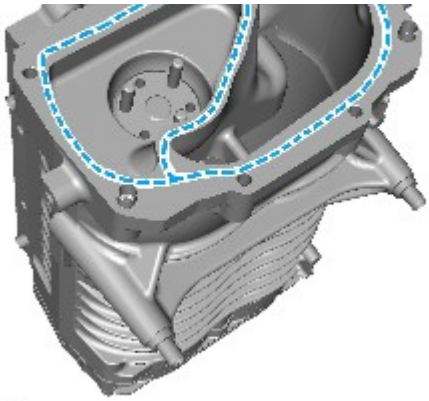

E160360

3.

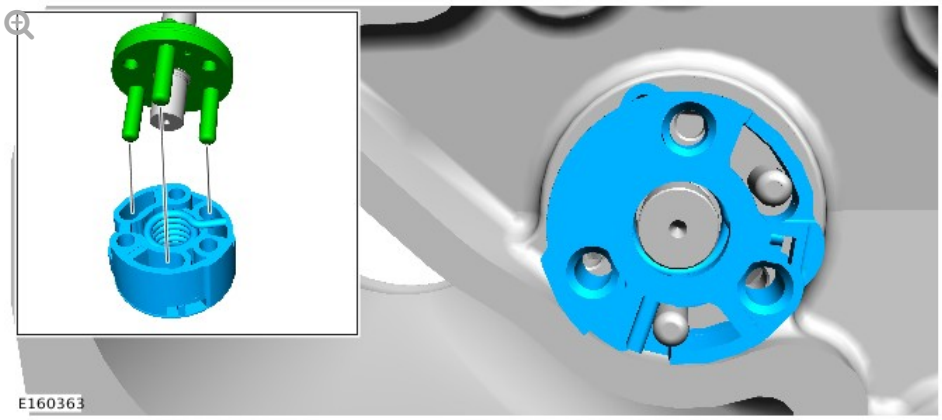

E160363

4.

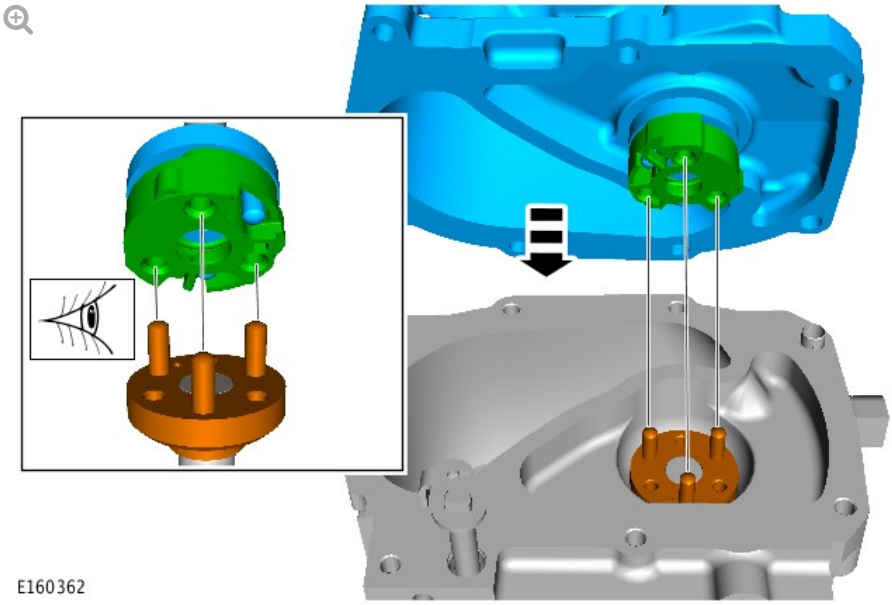

E160362

5.

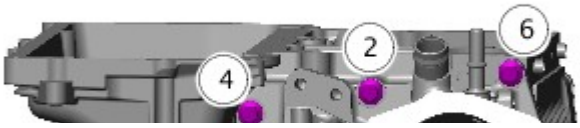

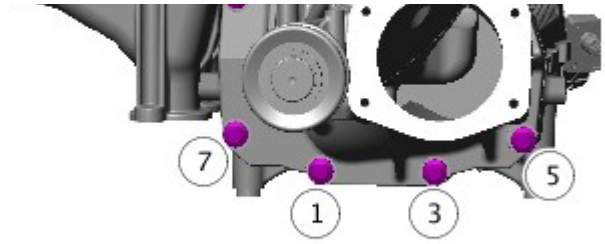

E160365

Torque: **27 Nm**

6. **NOTE:**

Loosen the adjustment screw.

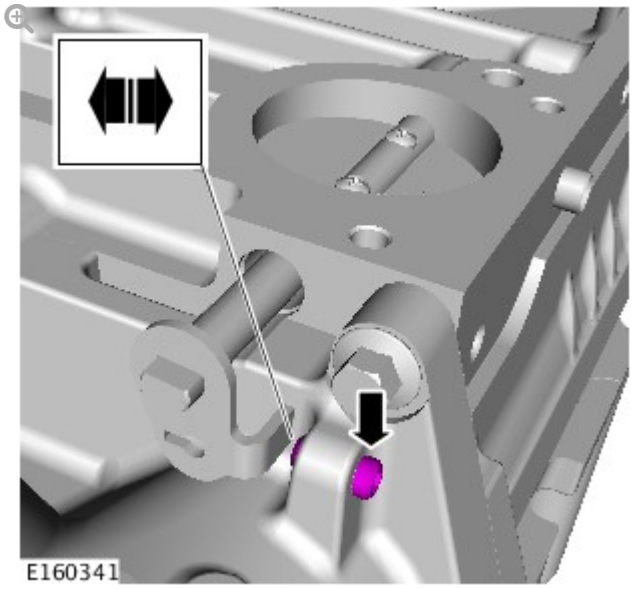

E160341

7.

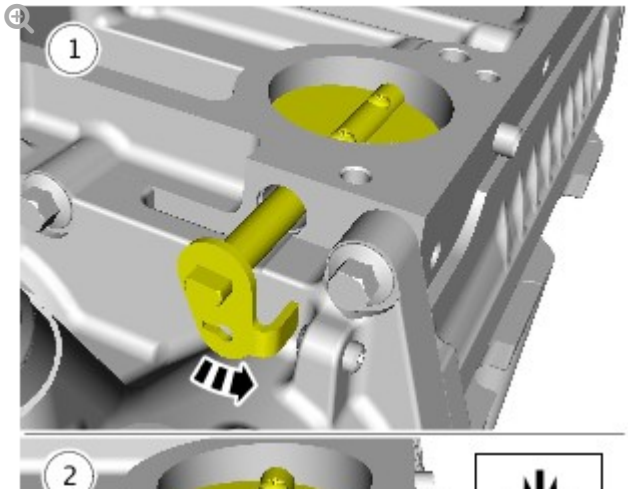

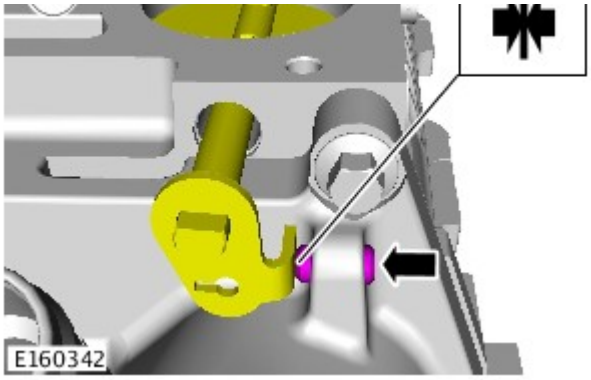

1. Using light pressure rotate the arm counter clockwise and hold.
1. Tighten the adjustment screw until no gap is visible.

8.

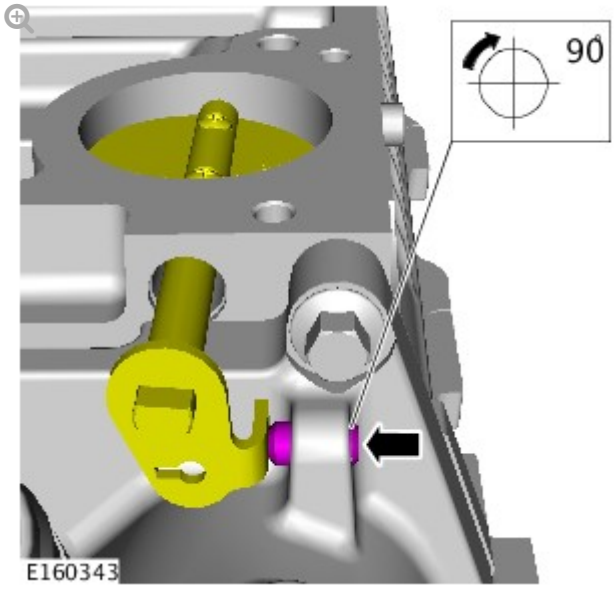

9.

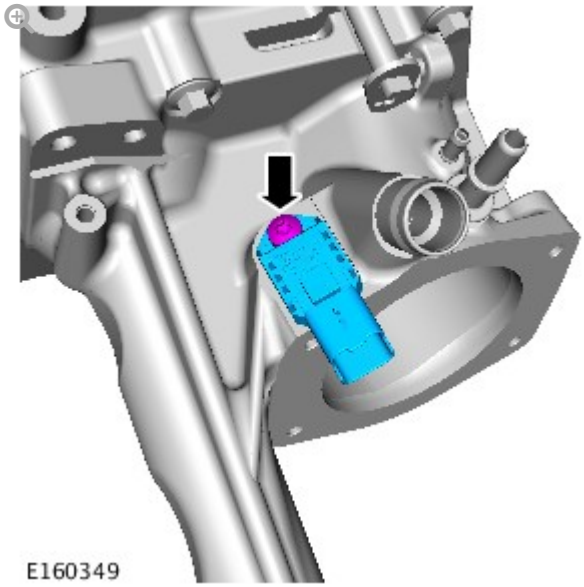

Torque: **5 Nm**

10.

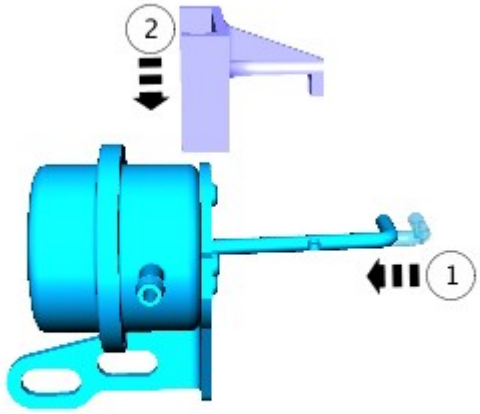

E160364

Assemble the installation tool, supplied, to the actuator.

11.

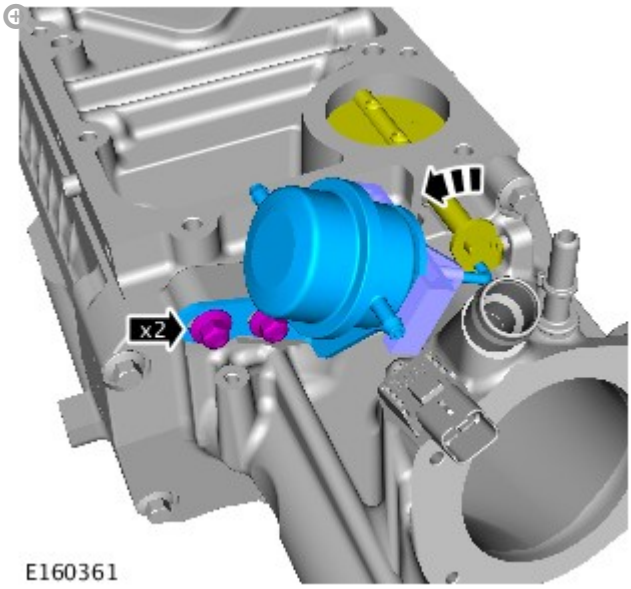

E160361

Torque: **20 Nm**

12.

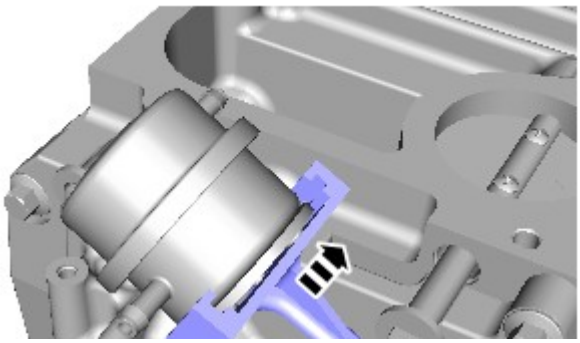

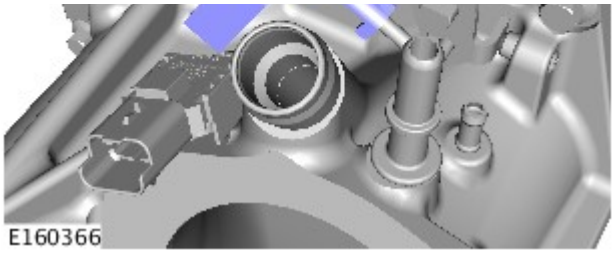

Remove the installation tool.

13.

CAUTIONS:

- Make sure that spring resistance is felt in both directions of the pulley as shown.
- Make sure that all open ports are covered to prevent any foreign material ingress.

NOTE:

Supercharger rotors will appear polished, this is normal.

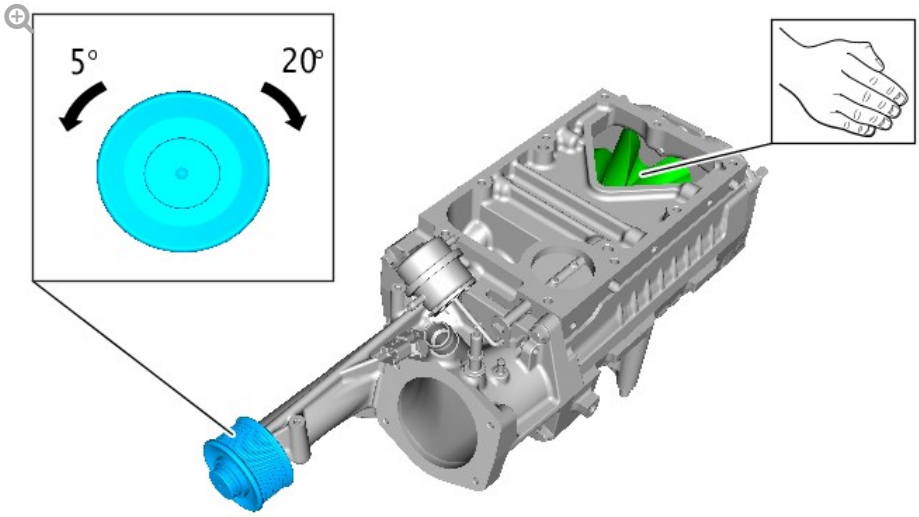

14.

CAUTION:

Make sure the components are installed as noted on removal.

Failure to follow this instruction may result in damage to the component.

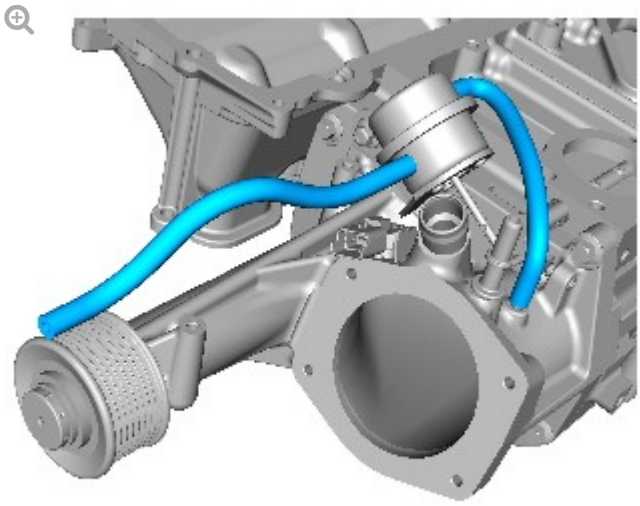

E160367

15.

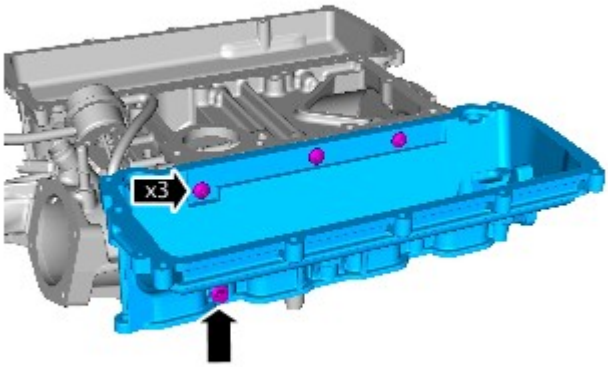

E160352

Torque: **25 Nm**

16. Refer to: Supercharger (303-12D Intake Air Distribution and Filtering - V8 S/C 5.0L Petrol, Removal and Installation).

EVAPORATIVE EMISSIONS – V8 5.0L PETROL/V8 S/C 5.0L PETROL

SPECIFICATIONS

Torque Specifications

DESCRIPTION	NM	LB-FT	LB-IN
Evaporative emission canister retaining bolts	19	14	-

2012.0 RANGE ROVER (LM), 303-13

EVAPORATIVE EMISSIONS – V8 5.0L PETROL/V8 S/C 5.0L PETROL

DESCRIPTION AND OPERATION

COMPONENT LOCATION – ALL EXCEPT NAS

NOTE:

Installation on naturally aspirated vehicle shown, installation on SC (supercharger) vehicle similar.

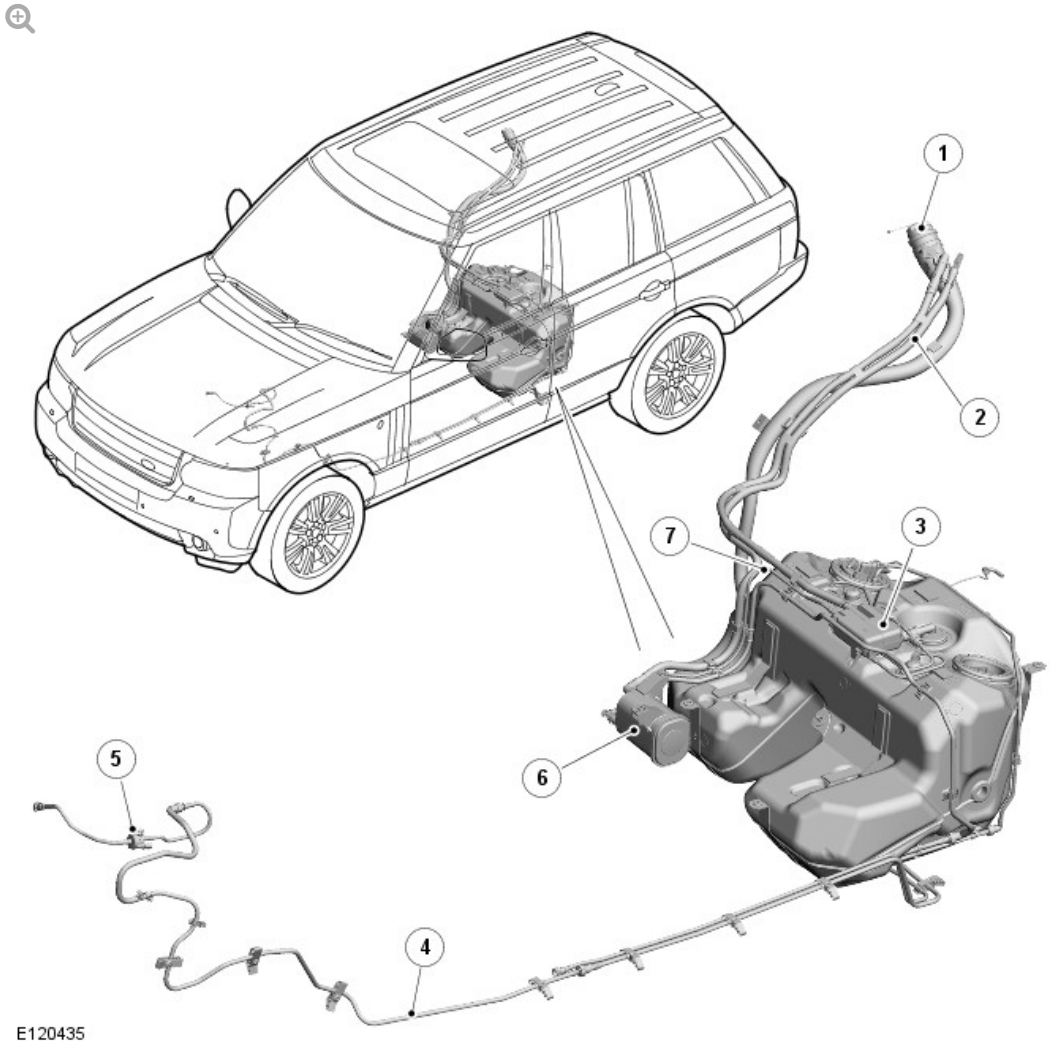

ITEM	DESCRIPTION
1	Fuel filler pipe/cap
2	Charcoal canister atmospheric vent hose
3	Vapor separator
4	Pipe to purge valve
5	Purge valve

6	Charcoal canister
7	Fuel tank vent pipe to canister

COMPONENT LOCATION – NAS

NOTE:

Installation on SC vehicle shown, installation on naturally aspirated vehicle similar.

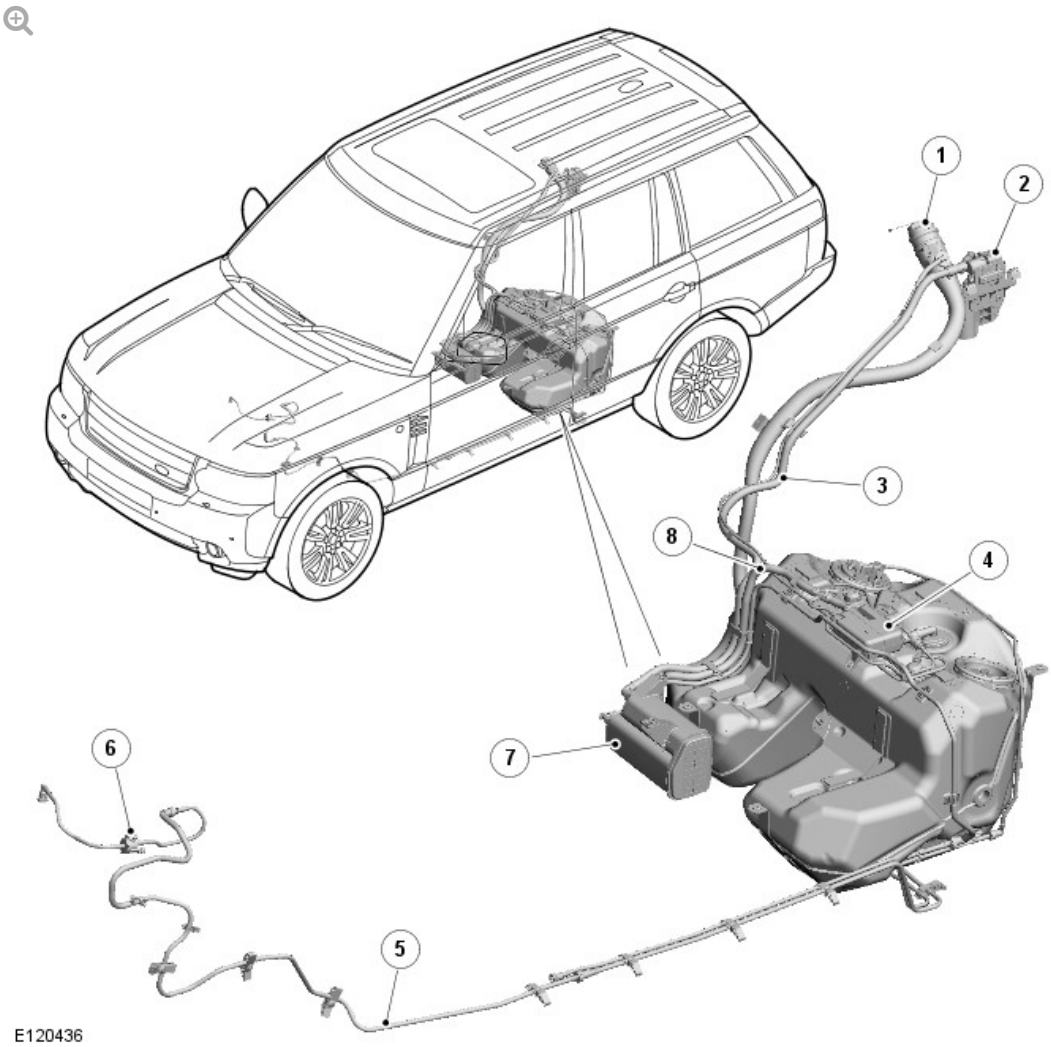

ITEM	DESCRIPTION
1	Fuel filler pipe/cap
2	DMTL (diagnostic module tank leakage) pump
3	Charcoal canister atmospheric vent hose

3	Charcoal canister atmospheric vent hose
4	Vapor separator
5	Pipe to purge valve
6	Purge valve
7	Charcoal canister
8	Fuel tank vent hose to canister

INTRODUCTION

The EVAP (evaporative emission) control system reduces the level of hydrocarbons released into the atmosphere by fuel vapor venting from the fuel tank. The system comprises a charcoal canister, purge valve and interconnecting vent pipes and hoses. The vent pipes are connected to the system components using quick release connectors.

Fuel vapor is generated by the fuel in the tank and the amount of vapor produced increases as the fuel heats up. Fuel vapor can flow freely to the charcoal canister via the tank venting system. The venting system consists of roll over valves and a liquid vapor separator mounted on the top of the tank and connected via a breather hose. The breather hose allows the hydrocarbon fuel vapor to flow to the charcoal canister.

On NAS vehicles the vapor generated in the fuel tank during refueling flows without restriction to the charcoal canister.

On all vehicles except NAS, the vapor is restricted in its path to the charcoal canister but can flow freely during the fuel filling operation to atmosphere, via the filler opening.

The vapor from the fuel tank passes from the vapor separator into the charcoal canister where it is absorbed and stored by the charcoal. Because there is a limit to the amount of vapor the canister can contain, the fuel vapor is purged from the canister when the engine is running and burned in the engine during the combustion cycle.

PURGE VALVE AND PIPES

NOTE:

Installation on naturally aspirated vehicle shown, installation on SC vehicle similar.

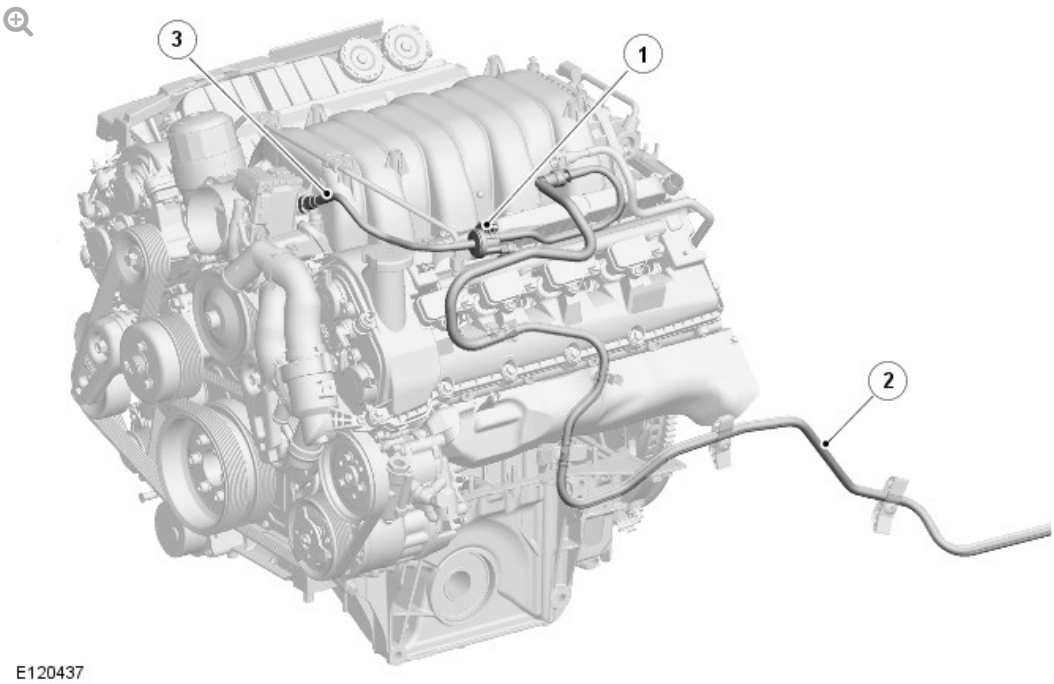

ITEM	DESCRIPTION
1	Purge valve
2	Pipe from charcoal canister
3	Pipe to engine

The purge valve is installed on a bracket attached to the LH (left-hand) cylinder head cover. The pipe to the engine from the purge valve is connected to the intake manifold (naturally aspirated vehicles), or SC front cover (SC vehicles), with a quick release connecter. The pipe to the charcoal canister from the purge valve is installed between the LH cylinder head cover and ignition coil cover, then goes through the left front suspension housing and along the underside of the vehicle, parallel with the fuel feed line. Just forward of the left rear wheel arch the pipe goes across the top of the fuel tank to the charcoal canister.

The purge valve is a solenoid operated valve, which is closed when de-

energized. The valve is controlled by the ECM (engine control module) and is operated when engine operating conditions are suitable for purging of the charcoal canister.

The purge valve is controlled by a PWM (pulse width modulation) signal at 10 Hz from the ECM. At this frequency, the pulses of purge gas flow into the engine in an almost continuous flow. The valve operates between 0% and 99% duty or mark space ratio (% open time).

The atmospheric pressure at the air intake vent of the system is higher than the inlet manifold pressure under all throttled engine running conditions. It is this pressure differential across the system that causes the air to flow through the air intake of the purge system and in to the engine. The operation of the supercharger does not affect the purging process.

The ECM waits until the engine is running above 55 °C (131 °F) coolant temperature, with closed loop fuel operational, before the purging process is activated. Under these conditions the engine should be running smoothly with no warm up enrichment. The purge valve duty (and flow) is initially ramped slowly because the vapor concentration is unknown (a sudden increase in purge could cause the engine to stall or loss of AFR control to occur). The concentration is then determined from the amount of adjustment that the closed loop fueling is required to make to achieve the target AFR (air fuel ratio). Once the concentration has been determined, the purge flow can be increased and the injected fuel can be proactively adjusted to compensate for the known purge vapor and the target AFR control is maintained.

When the purging process is active, fresh air is drawn into the charcoal canister via the DMTL atmospheric vent connection and filter (NAS vehicles) or via the vent hose connection and spider trap (all except NAS vehicles).

On NAS vehicles the system does not include a pressure test point. To pressure test the pipes of the purge system a special tool must be installed in the quick release connector adjacent to the purge valve or at the engine. This enables a pressure test of the pipes from the purge valve to the charcoal canister or from the engine to the purge valve.

CHARCOAL CANISTER

Charcoal Canister - All Except NAS

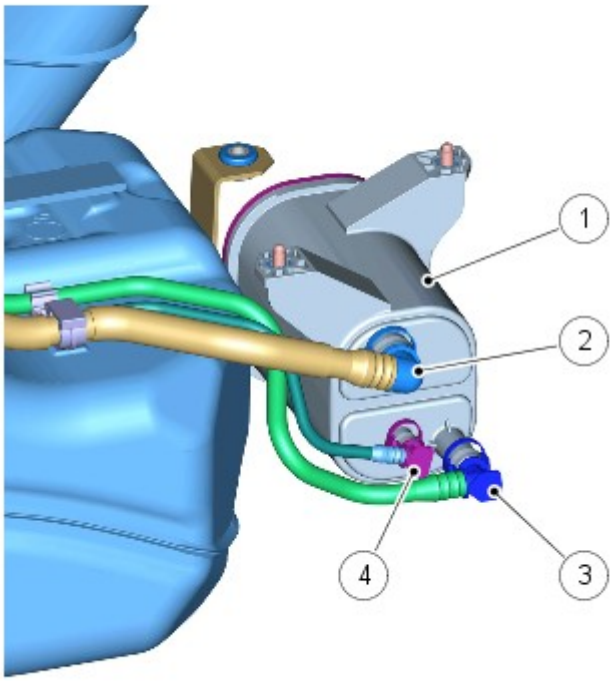

E60202

ITEM	DESCRIPTION
1	Charcoal canister
2	Charcoal canister atmospheric vent connection
3	Fuel tank vapor vent connection
4	Purge pipe connection

Charcoal Canister - NAS

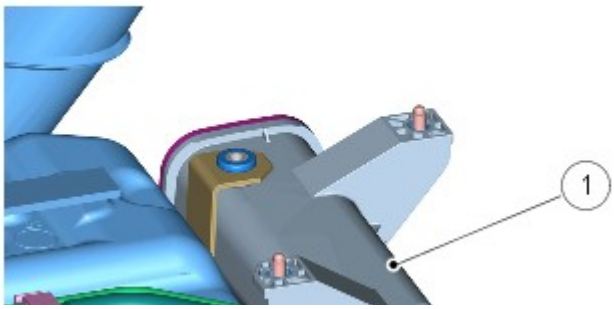

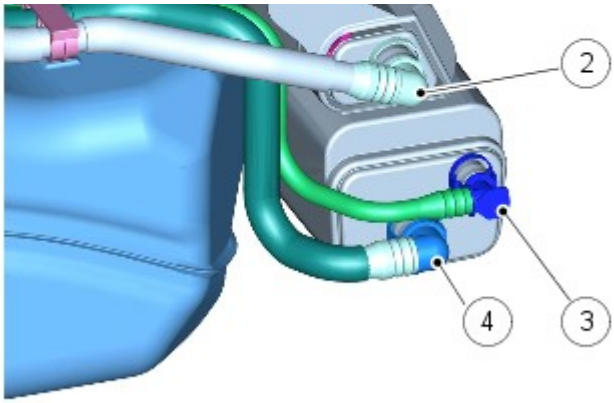

E60203

ITEM	DESCRIPTION
1	Charcoal canister
2	Charcoal canister atmospheric vent connection
3	Purge pipe connection
4	Fuel tank vapor vent connection

The charcoal canister is located on the forward edge of the fuel tank on the RH (right-hand) side. It is attached to brackets on the underfloor of the vehicle.

The canister on all except NAS vehicles has a capacity of 1200 cc (73.2 in^3).

The canister on NAS vehicles has a capacity of 3000 cc (183 in^3).

The canister has three ports which allow for the attachment of the pipes from the atmospheric vent, the purge valve and the tank vent. On NAS vehicles the atmospheric vent pipe connection allows for the attachment of the DMTL pump.

The canister contains a bed of activated charcoal or carbon. The charcoal is produced using special manufacturing techniques to treat the charcoal with oxygen. The oxygen treatment opens up millions of pores between the carbon atoms resulting in a highly porous charcoal with a very large effective surface area which is capable of absorbing large quantities of fuel vapor. Once treated the charcoal is known as 'activated' carbon or charcoal. The charcoal canister on NAS vehicles uses a higher grade charcoal to meet the

requirements of LEV2 emission regulations.

DIAGNOSTIC MODULE TANK LEAKAGE – NAS ONLY

The DMTL system is a legislative requirement for NAS vehicles. The DMTL system periodically checks the EVAP system and the fuel tank for leaks when the ignition is switched off.

The DMTL system comprises the previously described components of the EVAP system with the following additional components; a DMTL pump and a DMTL filter.

DMTL Pump

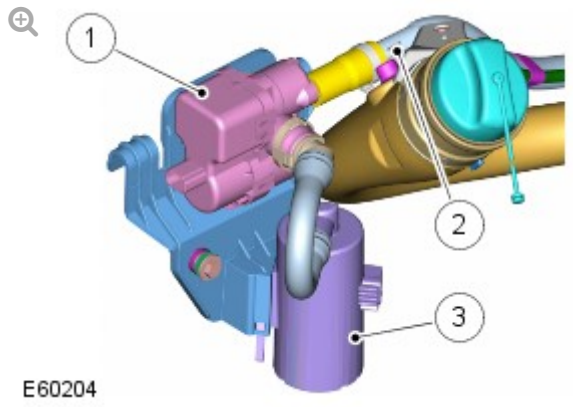

ITEM	DESCRIPTION
1	DMTL pump
2	Charcoal canister atmospheric vent pipe
3	DMTL pump intake filter

The DMTL pump is located at the top of the fuel filler pipe, on a bracket near to the filler neck. The pump is connected by a pipe to the atmospheric vent of the charcoal canister and incorporates a PTC (positive temperature coefficient) heating element, a normally open valve and a reference orifice. The DMTL pump is only operated when the ignition is switched off and is controlled by the ECM. The ECM also monitors the electric air pump operation and the normally open valve for faults.

The DMTL filter protects the pump from dust being drawn into the system when the pump is being operated. The filter is located below the DMTL pump and is connected by a hose.

DMTL OPERATION

To check the fuel tank and the EVAP system for leaks, the ECM operates the DMTL pump and monitors the current draw. Initially, the ECM establishes a reference current by pumping air through the reference orifice and back to atmosphere. Once the reference current is determined, the ECM closes the normally open valve, which seals the EVAP system. The purge valve remains de-energized and is therefore closed. The output from the air pump is diverted from the reference orifice and into the EVAP system.

DMTL System Inactive

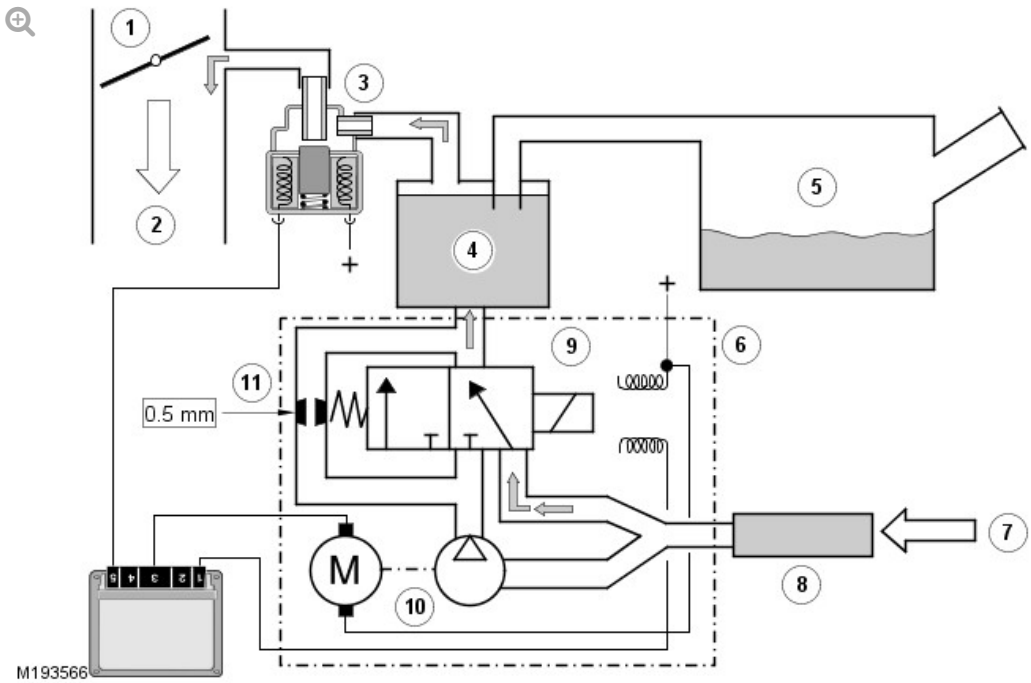

ITEM	DESCRIPTION
1	Throttle plate
2	Air flow to engine
3	Purge valve
4	Charcoal canister
5	Fuel tank
6	DMTL pump assembly

7	Air intake
8	Air filter
9	Change over valve
10	Pump
11	Reference orifice

In its inactive state, the DMTL pump motor and the change over valve solenoid are not energized. When the ECM energizes the purge valve, filtered fresh air enters the evaporative system through the sprung open change over valve of the DMTL pump. The filtered air enters the system compensating for engine vacuum drawing on the hydrocarbon vapors stored in the charcoal canister.

DMTL System Active

Phase 1 - Reference Measurement

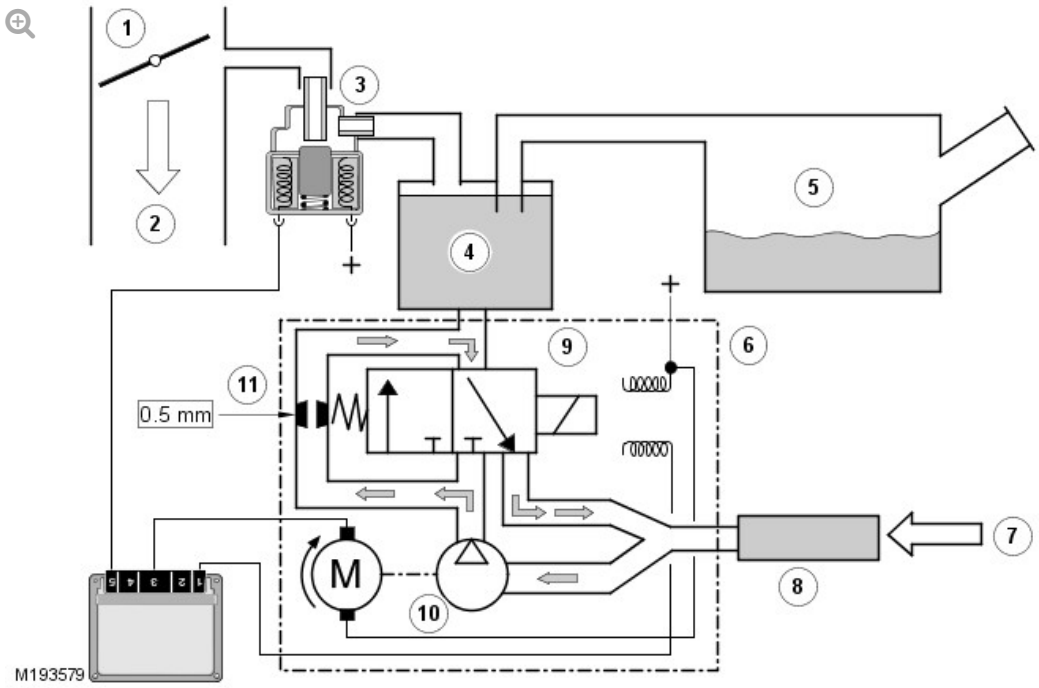

ITEM	DESCRIPTION
1	Throttle plate
2	Air flow to engine
3	Purge valve

4	Charcoal canister
5	Fuel tank
6	DMTL pump assembly
7	Air intake
8	Air filter
9	Change over valve
10	Pump
11	Reference orifice

When the ECM activates the DMTL system, it first activates only the DMTL pump motor. This pumps air through a 0.5 mm (0.02 in) reference orifice, which causes the electric motor to draw a specific amperage value. This value equates to the size of the reference orifice.

When the change over valve solenoid is energized, the normally open valve is closed, sealing the EVAP system from atmosphere. Providing there are no leaks, the air pump will begin to pressurize the EVAP system and the load and current draw on the pump increases. By monitoring the rate and level of the current increase, the ECM can determine if there is a leak in the EVAP system.

During normal vehicle operation, the ECM energizes the heating element in the pump to prevent condensation formation and possible incorrect current readings.

Leaks are classified as:

- Minor - equivalent to a hole diameter of 0.5 to 1.0 mm (0.02 to 0.04 in)
- Major - equivalent to hole diameter of 1.0 mm (0.04 in) or greater.

The ECM performs a check for major leaks each time the ignition is switched off, providing the following conditions are met:

- The vehicle speed is zero
- The engine speed is zero
- The pressure altitude (70 kPa (10.15 lbf/in^2) derived from engine load

The pressure altitude (Pa kPa (Pa/6.9 lbf/in²) derived from engine load calculations) is below 3047 m (10000 feet)

- The ambient temperature is between 0 and 40 °C (32 and 104 °F)
- The charcoal canister load factor is 5 or less (the load factor is a measure, between -1 and +30, of the fuel vapor stored in the charcoal canister, where -1 is 0% fuel vapor, 0 is stoichiometric fuel vapor level and +30 is 100% saturated with fuel vapor)
- The fuel tank level is valid and between 15 and 85% of nominal capacity
- The engine running time during the previous cycle was more than 10 minutes
- The battery voltage is between 10 and 15 volts
- The last engine off time was more than 180 minutes
- No errors are detected with the EVAP components, the ambient air temperature and the fuel level
- High range is selected on the transfer box.

NOTE:

A leak test can be performed using the Land Rover recommended diagnostic tool. This overrides the above conditions and is useful for checking correct system and component operation.

Phase 2 - Leak Detection

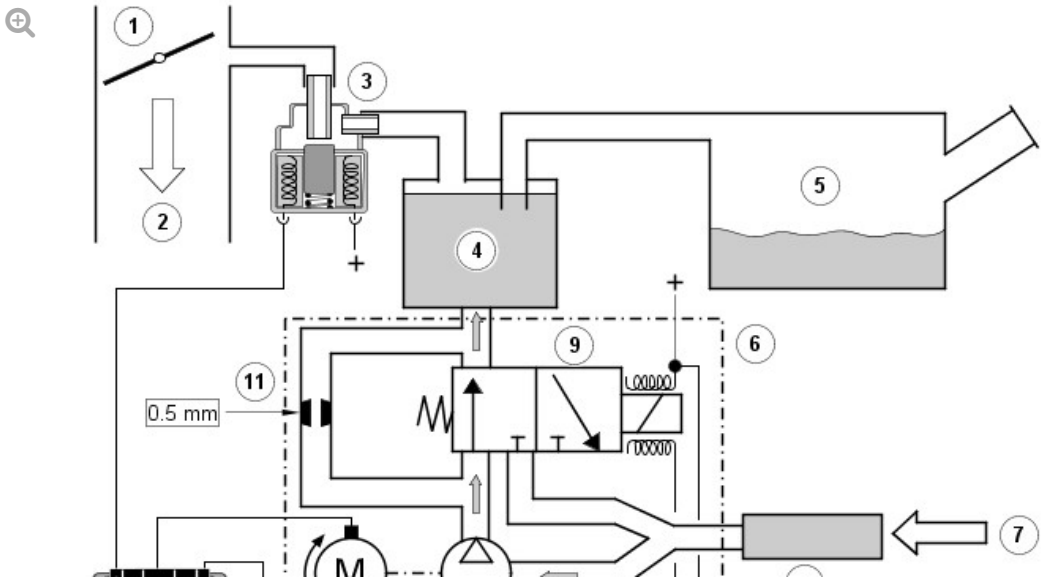

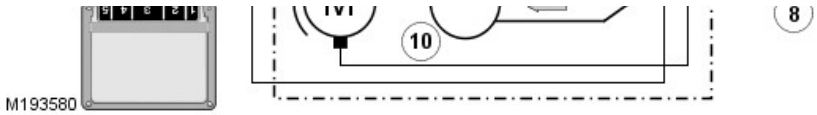

ITEM	DESCRIPTION
1	Throttle plate
2	Air flow to engine
3	Purge valve
4	Charcoal canister
5	Fuel tank
6	DMTL pump assembly
7	Air intake
8	Air filter
9	Change over valve
10	Pump
11	Reference orifice

The ECM performs a check for minor leaks after every 2nd major leak check or after refueling is detected.

When the leak check is complete, the ECM stops the DMTL pump and opens (de-energizes) the normally open change over valve.

If the fuel filler cap is opened or refueling is detected during the leak check, by a sudden drop in the current draw or a rise in the fuel level, the ECM aborts the leak check.

If a leak is detected during the check, the ECM stores an appropriate fault code in its memory. If a leak is detected on two consecutive checks, the ECM illuminates the MIL (malfunction indicator lamp) in the instrument cluster on the next drive cycle.

The duration of a leak check can be between 60 and 900 seconds depending on the test results (developed tank pressure amperage within a specific time period) and fuel tank level.

The following chart depicts the logic used to determine fuel system leaks:

Test Results

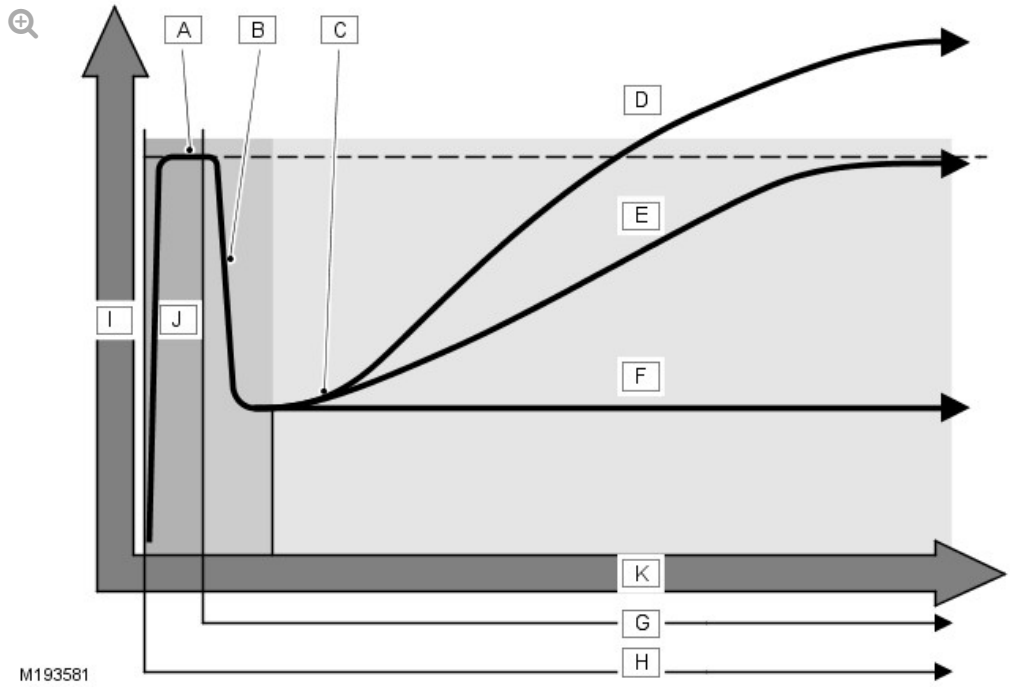

ITEM	DESCRIPTION
A	Current stabilizes
B	Current drops
C	Current rises
D	No leak detected
E	0.5 mm leak
F	Leak >1.0 mm
G	Change over valve energized
H	Pump motor energized
I	Motor current pressure
J	Reference measurement 0.5 mm
K	Time duration

2012.0 RANGE ROVER (LM), 303-13

EVAPORATIVE EMISSIONS – V8 5.0L PETROL/V8 S/C 5.0L PETROL

DIAGNOSIS AND TESTING

PRINCIPLES OF OPERATION

For a detailed description of the Evaporative Emissions system, refer to the relevant Description and Operation section in the workshop manual.
REFER to: Evaporative Emissions (303-13 Evaporative Emissions - V8 5.0L Petrol/V8 S/C 5.0L Petrol, Description and Operation).

INSPECTION AND VERIFICATION

CAUTION:

Diagnosis by substitution from a donor vehicle is **NOT** acceptable

Diagnosis by substitution from a donor vehicle is **NOT** acceptable. Substitution of control modules does not guarantee confirmation of a fault, and may also cause additional faults in the vehicle being tested and/or the donor vehicle.

NOTES:

- If a control module or a component is suspect and the vehicle remains under manufacturer warranty, refer to the Warranty Policy and Procedures manual, or determine if any prior approval programme is in operation, prior to the installation of a new module/component.
- When performing voltage or resistance tests, always use a digital multimeter accurate to three decimal places, and with an up-to-date calibration certificate. When testing resistance always take the resistance of the digital multimeter leads into account.
- Check and rectify basic faults before beginning diagnostic routines involving pinpoint tests.

1. Verify the customer concern

1. Visually inspect for obvious signs of damage and system integrity

Visual Inspection

MECHANICAL	ELECTRICAL
▪ Fuel filler cap and seal ▪ Fuel filler neck ▪ Fuel pipes ▪ Fuel tank ▪ Evaporative emissions canister ▪ Purge valve	▪ Fuses ▪ Wiring harnesses and connectors ▪ Engine Control Module (ECM) ▪ Purge valve

1. If an obvious cause for an observed or reported concern is found, correct the cause (if possible) before proceeding to the next step

1. If the cause is not visually evident, verify the symptom and refer to the Symptom Chart, alternatively check for Diagnostic Trouble Codes (DTCs) and refer to the DTC Index

1. Check DDW for open campaigns. Refer to the corresponding bulletins and SSMs which may be valid for the specific customer complaint and carry out the recommendations as required

SYMPTOM CHART

SYMPTOM	POSSIBLE CAUSES	ACTION
Difficulty in filling fuel tank	▪ Restriction in the vapour line between the fuel tank and the carbon canister outlet/atmospheric port	▪ Check for restrictions/damage
Fuel smell	▪ System leak ▪ Purge valve inoperative	▪ Check for leaks ▪ Check the purge valve operation

DTC INDEX

For a list of Diagnostic Trouble Codes (DTCs) that could be logged on this vehicle, please refer to Section 100-00.

EVAPORATIVE EMISSION CANISTER (G1224390)

REMOVAL AND INSTALLATION

17.15.13	EVAPORATIVE EMISSION CANISTER – RENEW	5000 CC, AJ V8	1	USED WITHINS	+

REMOVAL

NOTE:

Removal steps in this procedure may contain installation details.

1. Disconnect the battery ground cable.
   Refer to: Specifications (414-00 Charging System - General Information, Specifications).

2. **WARNING:**

   Refer to: Petrol and Petrol-Ethanol Fuel Systems Health and Safety Precautions (100-00, Description and Operation).

3. **WARNING:**

Make sure to support the vehicle with axle stands.

Raise and support the vehicle.

4. Refer to: Exhaust System (309-00 Exhaust System - 5.0L NA V8 - AJ133/5.0L SC V8 - AJ133, Removal and Installation).

5.

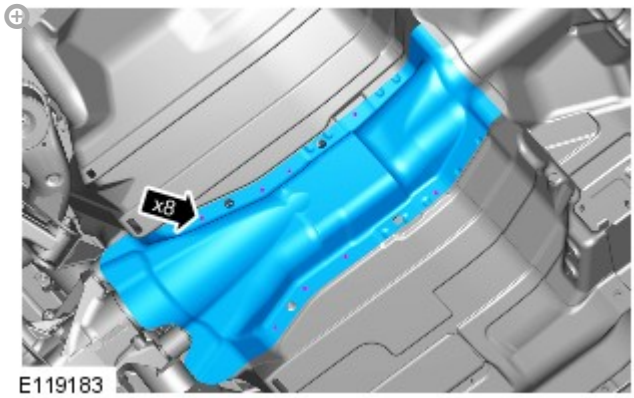

E119183

- *Torque:* **5 Nm**

6.

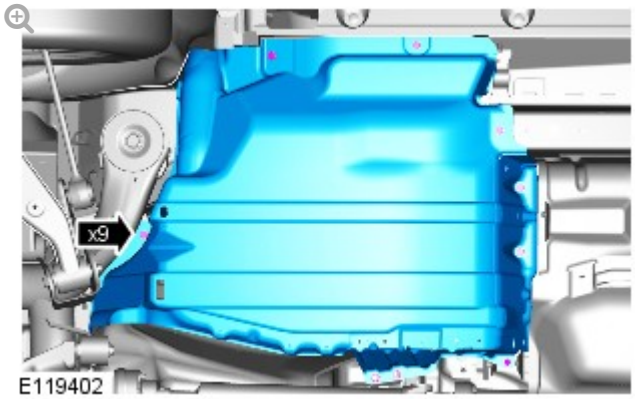

E119402

- *Torque:* **22 Nm**

7. **CAUTION:**

Before the disconnection or removal of any components, ensure the area around joint faces and connections are clean. Plug any open connections to prevent contamination.

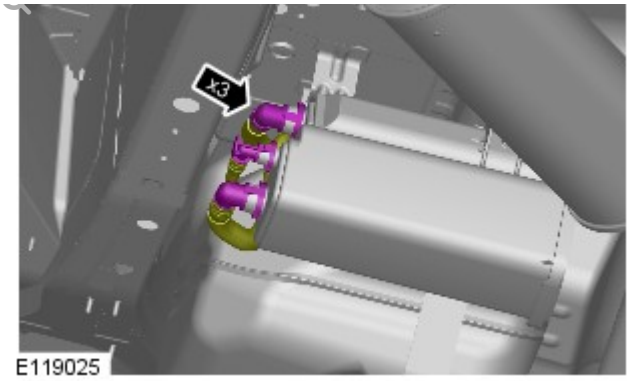

8.

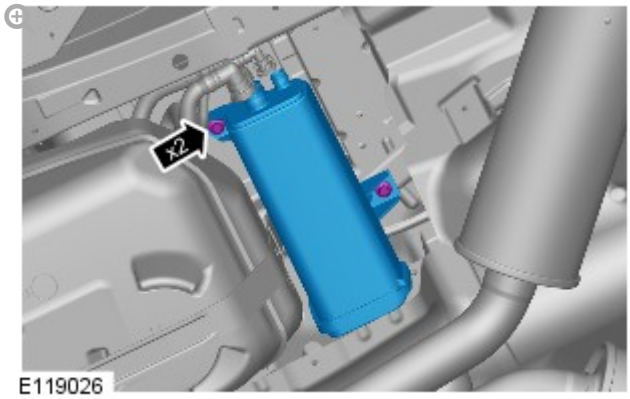

Remove the evaporative emissions canister.

Torque: **19 Nm**

INSTALLATION

1. To install, reverse the removal procedure.

2012.0 RANGE ROVER (LM), 303-13

EVAPORATIVE EMISSIONS – V8 5.0L PETROL/V8 S/C 5.0L PETROL

EVAPORATIVE EMISSION CANISTER PURGE VALVE – V8 S/C 5.0L PETROL (G1224392)

17.15.06	SOLENOID – EVAPORATIVE EMISSION CANISTER PURGE – RENEW	AJ V8, SUPERCHARGED	0.6	USED WITHINS	+
17.15.39	VALVE – EVAPORATIVE EMISSION CANISTER PURGE – RENEW	5000 CC, AJ V8, SUPERCHARGED	0.2	USED WITHINS	+

REMOVAL

NOTE:

Removal steps in this procedure may contain installation details.

1. Disconnect the battery ground cable.
   Refer to: Specifications (414-00, Specifications).

2. Refer to: Engine Cover - 5.0L (501-05, Removal and Installation).

3. 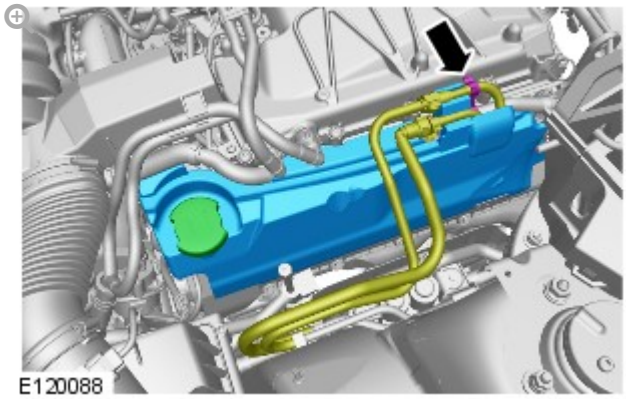

4. 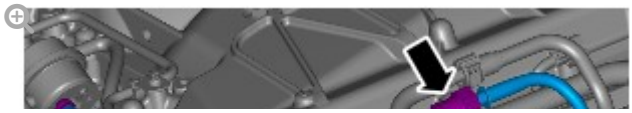

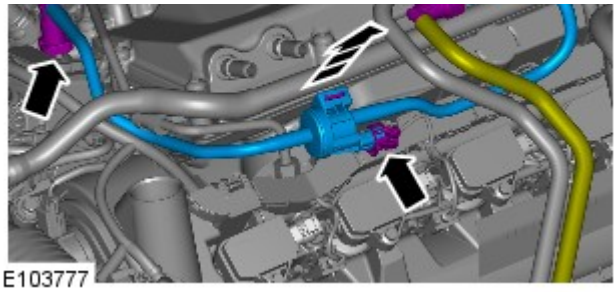

INSTALLATION

1. To install, reverse the removal procedure.

2012.0 RANGE ROVER (LM), 303-14

ELECTRONIC ENGINE CONTROLS – V8 S/C 5.0L PETROL

SPECIFICATIONS

Torque Specifications

DESCRIPTION	NM	LB-FT	LB-IN
Camshaft position (CMP) sensor(s) retaining bolt	10	7	-
Crankshaft position (CKP) sensor retaining bolt	10	7	-
Heated oxygen sensor(s) (HO2S)	48	35	-
Catalyst monitor sensor(s)	48	35	-
Knock sensor(s) (KS) retaining bolt	20	15	-
Fuel rail pressure (FRP) sensor	32	24	-

Manifold absolute pressure and temperature (MAPT) sensor	5	-	44
Engine oil level sensor retaining bolts	12	8	-
Variable valve timing (VVT) oil control solenoid(s) retaining bolts	10	7	-
Engine control module (ECM) cover retaining bolt	9	-	80
ECM bracket retaining nut	9	-	80