REAR DOOR WINDOW GLASS – ARMOURED (G840490)

REMOVAL AND INSTALLATION

76.31.02	GLASS – REAR DOOR – RENEW	ALL DERIVATIVES	0.5	USED WITHINS	+

REMOVAL

WARNING:

It is essential that the glass is fully supported before loosening any fixings.

1. Remove the trim panel from the door.
   For additional information, refer to: Rear Door Trim Panel (501-05, Removal and Installation).

2. Remove the outer waist seal from the rear door.

3. Remove the inner waist seal from the rear door.

4. Obtain a length of nylon webbing strap and cut into two lengths suitable for supporting the glass in the door frame.

5.

Pass the support straps underneath the glass and secure them around the window frame.

6.

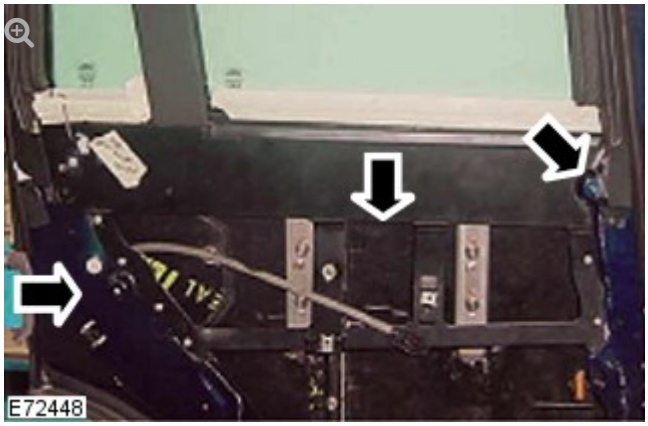

Drill out the pop rivets and remove the inner door panel.

7. Remove the 2 bolts securing the handle protection plate and remove the plate.

8. **Models with electric rear windows:** Remove the electric strut from the door.
For additional information, refer to: Front Door Window Regulator Motor (501-11, Removal and Installation).

9. **Models with electric rear windows:** Remove both gas struts from the door.

10.

Models with fixed rear windows: Remove the 2 small screws and the 4 bolts retaining the U-shaped holder. Lower the U-shaped holder.

11.

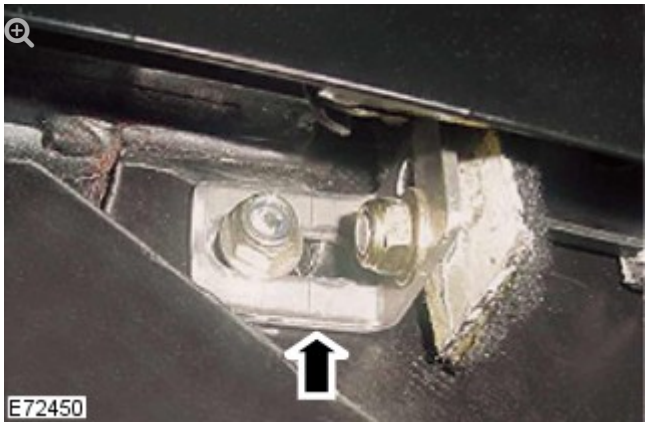

Remove the 2 nuts securing the L-shaped bracket to the door and the quarter pillar. Remove the L-shaped bracket and slide the quarter pillar downwards (1).

12.

WARNING:

The window glass is extremely heavy and two people are needed to lower it safely.

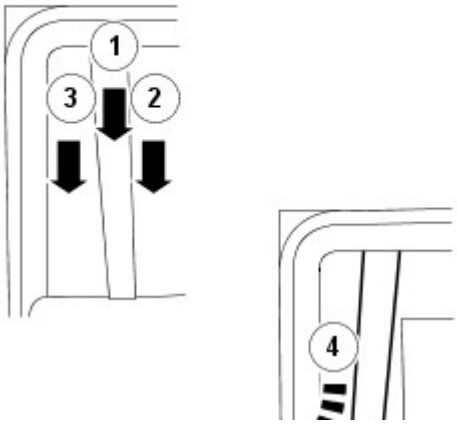

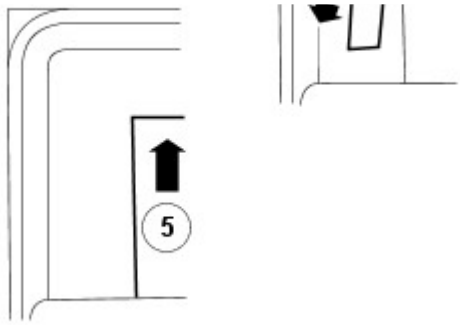

E72451

With an assistant, remove the support straps, then move the window glass downwards (2) sufficiently to allow the quarter glass to be lowered into the door and withdrawn from the vehicle (3).

13. Tilt the quarter pillar outwards and extract it from the door to the outside of the vehicle (4).

14. **WARNING:**

> The window glass is extremely heavy and two people are needed to remove it safely.

With an assistant, raise the window glass, then tilt outwards and extract from the door to the outside of the vehicle (5).

INSTALLATION

1. To install the window glass, reverse the removal procedure. Tighten the L shaped bracket screws, the U shaped holder screws and the small screws to 25 Nm, (18 lbf.ft).

2012.0 RANGE ROVER (LM), 501-11

GLASS, FRAMES AND MECHANISMS

REAR DOOR WINDOW REGULATOR MOTOR (G916883)

REMOVAL AND INSTALLATION

REMOVAL

1. Remove the rear door window glass.
   For additional information, refer to: Rear Door Window Glass (501-11, Removal and Installation).

2. 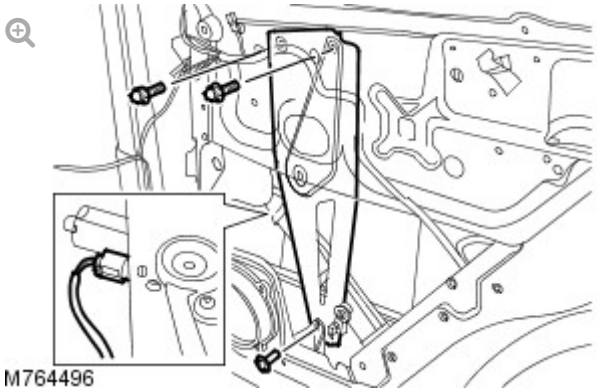

   Remove the rear door window regulator and motor.
   - Disconnect the electrical connector.
   - Remove and discard the lower bolt.
   - Remove the 2 upper bolts.

INSTALLATION

1. Install the rear door window regulator and motor.
   - Remove the two clips from the rear door window regulator and motor.
   - Tighten the 2 upper bolts to 10 Nm (7 lb.ft).
   - Tighten the new bolt to 10 Nm (7 lb.ft).

2. Connect the rear door window glass regulator and motor electrical connector.

3. Install the rear door window glass.

For additional information, refer to: Rear Door Window Glass (501-11, Removal and Installation).

REAR QUARTER WINDOW GLASS (G916877)

REMOVAL AND INSTALLATION

76.81.20	GLASS/SEALING RUBBER - QUARTER LIGHT - REAR - RENEW	ALL DERIVATIVES	1.5	USED WITHINS	+

REMOVAL

NOTE:

The following equipment is required: Cutting wire and handles.

Reciprocating cutting knife. Glazing knife. Glass replacement kit. Sealant applicator. Suction cups. Felt covered table or a felt covered glazing support stand.

1. Remove the rear quarter panel moulding.
   For additional information, refer to: Rear Quarter Panel Moulding (501-08 Exterior Trim and Ornamentation, Removal and Installation).

2. Remove the access panel from the loadspace trim panel.

3. 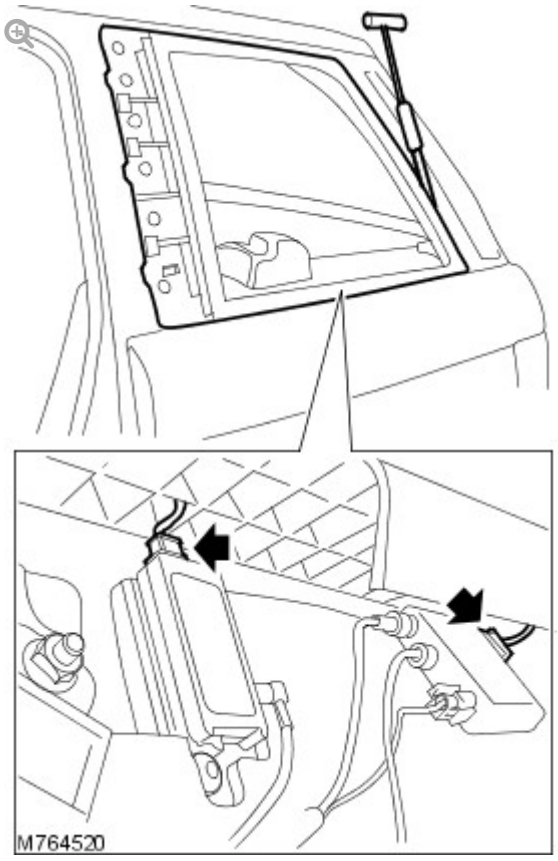

   Disconnect the antenna module electrical connector.

4. Apply protection to the exterior paintwork, adjacent to the rear quarter window glass.

5. Apply protection to the internal trim, adjacent to the rear quarter window glass.

6. Remove the upper and lower rear quarter window glass finishers.
   - Cut through the bonded finishers, to gain access to the rear

quarter window glass sealant.

7. Cut through the rear quarter window glass sealant from the outside.
   - Use of a reciprocating flat blade glazing knife is permissible.

8. If required, use a glazing cutting wire to remove any remaining sealant.

9. Remove the rear quarter window glass.

10. Remove the sealant from the rear quarter window glass aperture.
    - Make sure when the sealant has been removed that the finished surface is clean and smooth.

INSTALLATION

1. Using the recommended solvent, clean the mating face of the rear quarter window glass aperture.

2. **CAUTION:**

   Correct preparation of body apertures "post painting" to ensure satisfactory glass adhesion, must be carried out in line with industry practise.

   Apply etch primer to any bare metal.

3. Apply primer over the etch primer.

4. Apply glass primer to the sealant face of the rear quarter window glass and allow to cure.

5. Apply activator over the old sealant on the rear quarter window glass aperture and allow to cure.

6. Install the pre-cut nozzle to sealant cartridge and remove the lid and shake out the crystals, followed by installing the cartridge to the applicator tool.

7. 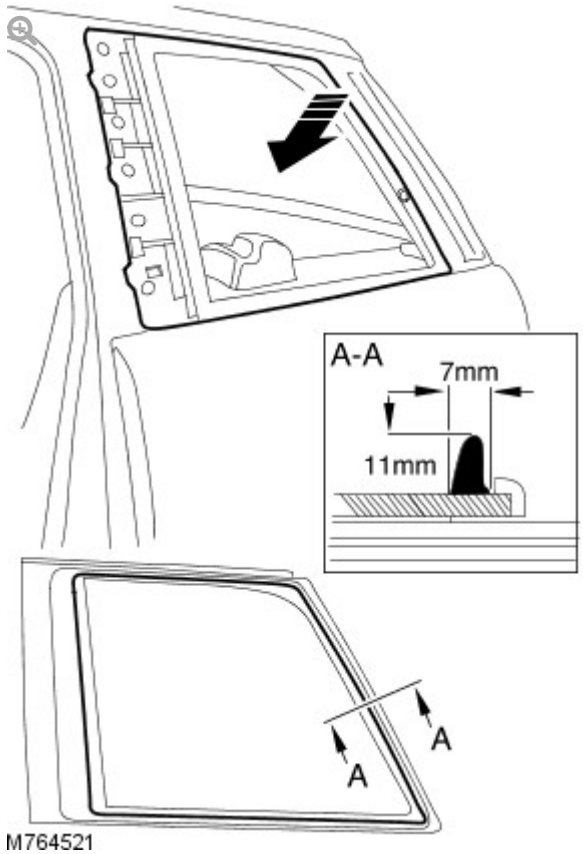

Apply a continuous bead of sealant to the rear quarter window glass as shown.

8. With assistance, install and align the rear quarter window glass.
   - Lightly press the rear quarter window glass into the rear quarter window glass aperture to seat the sealant.

9. Connect the antenna module electrical connector.

10. Install the access panel to the loadspace trim panel.

11. Remove the protection, from the interior and exterior rear quarter window glass area.

12. Test the sealer for leaks, apply additional sealer if necessary. If water is used, allow sealer to dry before testing. Spray water around

the glass and check for leaks. Mark any area that leaks. Dry the glass and sealer then apply additional sealer.

13. Install the rear quarter panel moulding.
For additional information, refer to: Rear Quarter Panel Moulding (501-08 Exterior Trim and Ornamentation, Removal and Installation).

2012.0 RANGE ROVER (LM), 501-11

GLASS, FRAMES AND MECHANISMS

REAR QUARTER WINDOW GLASS – ARMOURED (G840491)

REMOVAL AND INSTALLATION

76.81.20	GLASS/SEALING RUBBER – QUARTER LIGHT – REAR – RENEW	ALL DERIVATIVES	1.5	USED WITHINS	+

REMOVAL

Rear quarter glass specification drawing

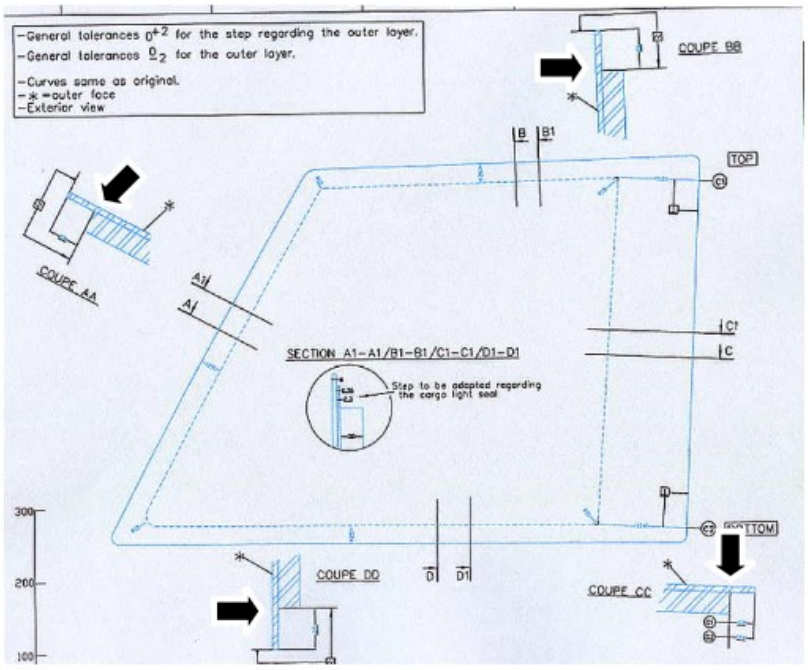

E72442

CAUTION:

Protect the paintwork before attempting to remove the rear quarter glass.

1. Remove the 'E' post finisher fixings as described in the Range Rover Workshop Manual.

2. 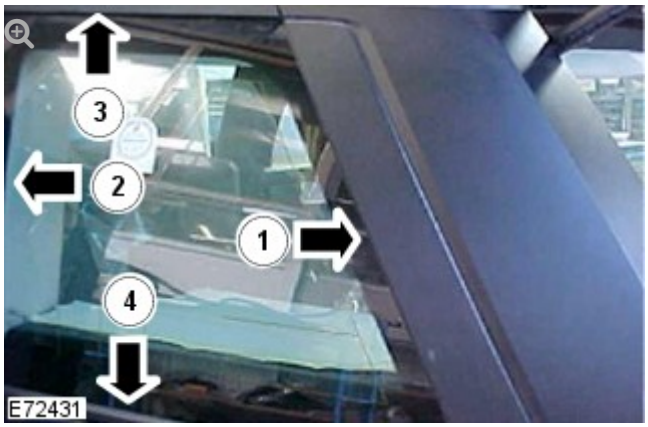

   Carefully cut along the seal between the glass and the 'E' post finisher, as indicated by arrow (1).

3. Carefully cut along the seal between the glass and the quarter light front finisher, as indicated by arrow (2).

4. Remove the rubber seal between the roof and the glass (3) and between the rear quarter panel and the glass (4).

5. 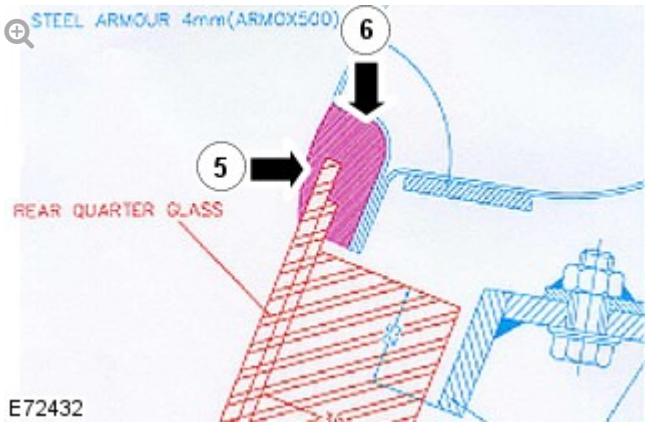

   Place adhesive tape around the edge of the rear screen and,

following the arrow (5), cut around the glass using a special diamond disk. Cut 3 mm (0.12 inch) outside the dimension shown on the rear quarter glass drawing at the start of this procedure.

6. Using a pneumatic knife, cut the rubber and PU seals between the glass frame and glass, in the direction of arrow (6). Remove the outer perimeter of glass.

7. Using a pneumatic knife, cut through the PU seal between the armoured frame and the armoured glass. Remove all the remaining sealer and clean the surface.

8. **WARNING:**

> The glass is extremely heavy and two people are needed to remove it safely.

Attach to suction cups to the rear quarter glass and remove from the vehicle by pulling from the outside and pushing from the inside.

9. Clean all the seal remaining around the periphery of the frame.

10. **WARNING:**

> The window glass is extremely heavy. Ensure that sufficient people are available to lift the screen safely.

With 2 people available for lifting the rear quarter glass, attach suction cups and position the rear quarter glass in the aperture, without a seal. Check the gaps around the edge of the glass mark the position of the glass then remove the glass.

INSTALLATION

1. Clean the surface of the glass which will be in contact with the PU

1. Clean the surface of the glass which will be in contact with the PU with Betawipe 4000.

2. Apply glass primer (Betaprime 5001) on the area of the glass which will be in contact with the frame and also on the side of the armoured glass. Wait 1 hour for the primer to dry.

3. Apply painted sheet steel primer (Betaprime 5404) on the frame. Wait 1 hour for the primer to dry.

4. 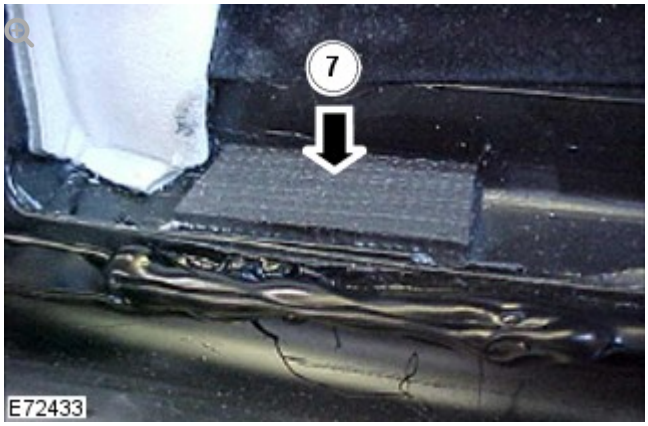

Position rubber pads (7) at the bottom of the window frame and glue in position. The glass will locate on these pads.

5. 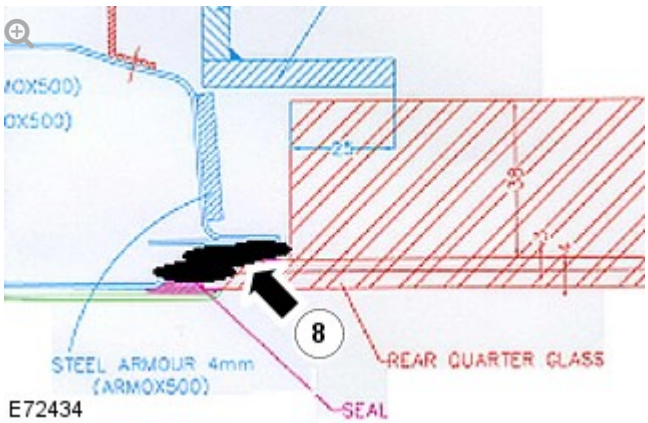

Make sure all the surfaces are clean and no dust is behind the glass. Around the edge of the armoured frame and also around the side of the armoured glass make a 15 to 20 mm (0.6 to 0.8 in) thick PU (Betaseal HV3) seal (8, 9).

6. **WARNING:**

The window glass is extremely heavy. Ensure that sufficient people are available to lift the screen safely.

With 2 people available for lifting the rear quarter glass, attach suction cups and position the screen in the aperture.

7. Position the glass in the aperture and secure in place with adhesive tape. Leave the glass for 24 hours.

8. Fit the finishing rubber seal and mark the position of the seal on the glass with adhesive tape. Then remove the seal.

9. Degrease the glass with Betawipe 4000 and apply glass primer (Betaprime 5001) on the glass where the seal will be glued.

10. Apply painted sheet steel primer (Betaprime 5404) inside the seal. Make a 4 mm PU (Betaseal HV3) seal on the glass and put the seal in position.

11. 

Reassemble the 'E' post finisher by applying Betaseal HV3 seal at the points illustrated on the finishers and on the body.

12.

Fit the 'E' post finisher and secure it with adhesive tape. Fit rubber seal in position and make a Betaseal HV3 seal between the rubber seal and the rear quarter panel.

13.

Using soapy water smooth the rear quarter glass seal. Apply non adhesive seal (Sika 710) at the top of the glass.

14.

Reassemble the quarter panel front finishers by applying (Betaseal

Reassemble the quarter panel front finishers by applying (Betaseal HV3) seal on the finisher and on the body. Fit the finisher and secure it with adhesive tape.

15. Clean the glass and polycarbonate window with a non aggressive solution (isopropyl, alcohol, teepol).

2012.0 RANGE ROVER (LM), 501-11

GLASS, FRAMES AND MECHANISMS

WINDSHIELD GLASS (G928164)

REMOVAL AND INSTALLATION

76.81.01	GLASS/SEALING RUBBER - WINDSHIELD - RENEW	ALL DERIVATIVES	1.7	USED WITHINS	+

REMOVAL

NOTE:

The following equipment is required: Cutting wire and handles. Reciprocating cutting knife. Glazing knife. Windshield glass replacement kit. Sealant applicator. Suction cups. Felt covered table or a felt covered glazing support stand.

1. Remove the roof mouldings.
   For additional information, refer to: Roof Moulding (501-08 Exterior Trim and Ornamentation, Removal and Installation).

2. Remove the windshield glass mouldings.
   For additional information, refer to: Windshield Moulding (501-11 Glass, Frames and Mechanisms, Removal and Installation).

3. Remove the cowl panel grille.
   For additional information, refer to: Cowl Panel Grille (501-02 Front End Body Panels, Removal and Installation).

4. Remove the interior rear view mirror.
   For additional information, refer to: Interior Rear View Mirror (501-09 Rear View Mirrors, Removal and Installation).

5. Remove the A-pillar trim panels.
   For additional information, refer to: A-Pillar Trim Panel (501-05 Interior Trim and Ornamentation, Removal and Installation).

6. 

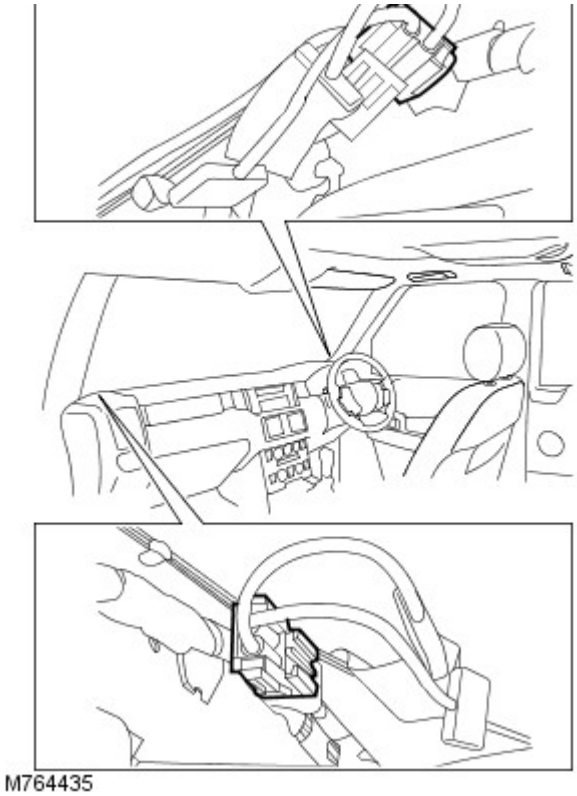

Disconnect the 2 electrical connectors from the heated windshield glass element.

7. Apply protection to the exterior paintwork, adjacent to the windshield glass.

8. Apply masking tape to the defroster ducts.

9. Apply protection to the instrument panel and interior of the vehicle.

10.

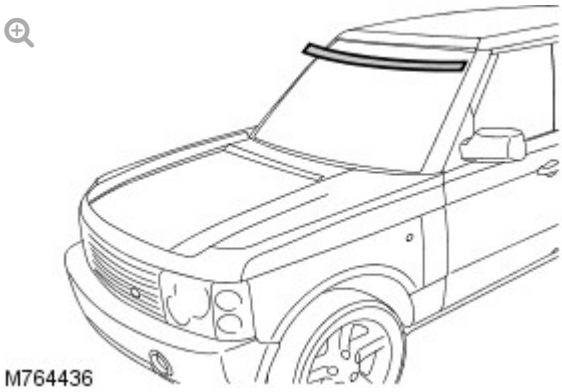

Remove and discard the windshield glass upper moulding.

11.

Using a flat blade cutting tool and working from the outside, cut through the windshield glass sealant securing both sides and the upper section.

- Use of a reciprocating flat blade glazing knife is permissible.
- If necessary use a cutting wire to cut through any remaining windshield glass sealant securing the sides and the upper section.

12.

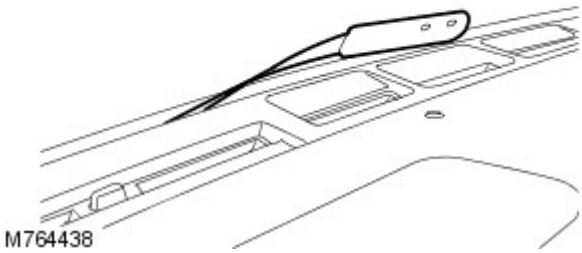

Working from the inside and using a glazing knife, cut through the windshield glass sealant securing the lower section.

- Use of a reciprocating flat blade glazing knife is permissible.

13.

CAUTION:

Lay the glass on felt covered supports. Do not stand on edge as this can cause chips which subsequently develop into cracks.

With assistance, remove the windshield glass.

- Use suction cups to aid removal.

14.

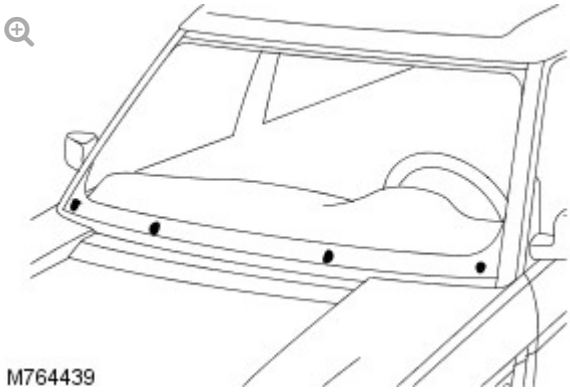

Remove the 4 windshield glass support blocks from the vehicle body.

15. Remove the windshield glass sealant from the vehicle body.

- Make sure when the sealant has been removed that the finished surface is clean and smooth.

16. Remove the windshield glass sealant from the windshield glass.

- Make sure when the sealant has been removed, that the surface is clean and smooth and without damage to the obscuration band.

INSTALLATION

1.

CAUTION:

Make sure that a new windshield glass upper moulding is installed. Failure to follow this instruction may result in damage to the vehicle.

Install the windshield glass upper moulding.

2. Install the windshield glass support blocks to the vehicle body.

3. With assistance, install the windshield glass and centralize in the vehicle body aperture.

4.

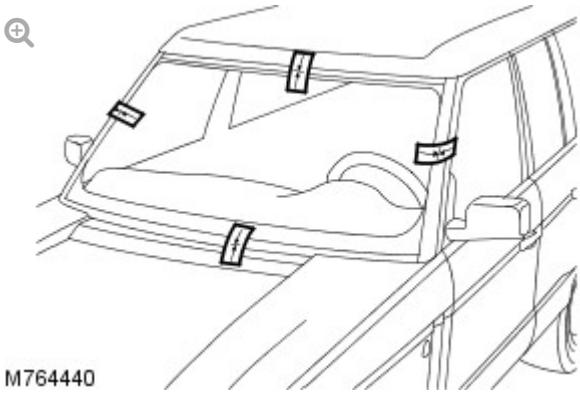

Use masking tape to establish reference marks and to aid as an alignment guide.

5. With assistance, remove the windshield glass.

6. Using the recommended solvent, clean the mating faces of the vehicle body windshield glass aperture and windshield glass.

7. **CAUTION:**

> Correct preparation of body apertures “post painting” to ensure satisfactory glass adhesion, must be carried out in line with industry practise.

Apply etch primer to the vehicle body windshield glass aperture.

8. Apply primer over the previously applied etch primer.

9. Apply glass primer to the sealant mating face of the windshield glass and allow to cure.

10. Apply activator over the old sealant on the vehicle body windshield glass aperture and allow to cure.

11. Install the pre-cut nozzle to sealant cartridge and remove the lid and shake out the crystals, followed by installing the cartridge to the applicator tool.

12.

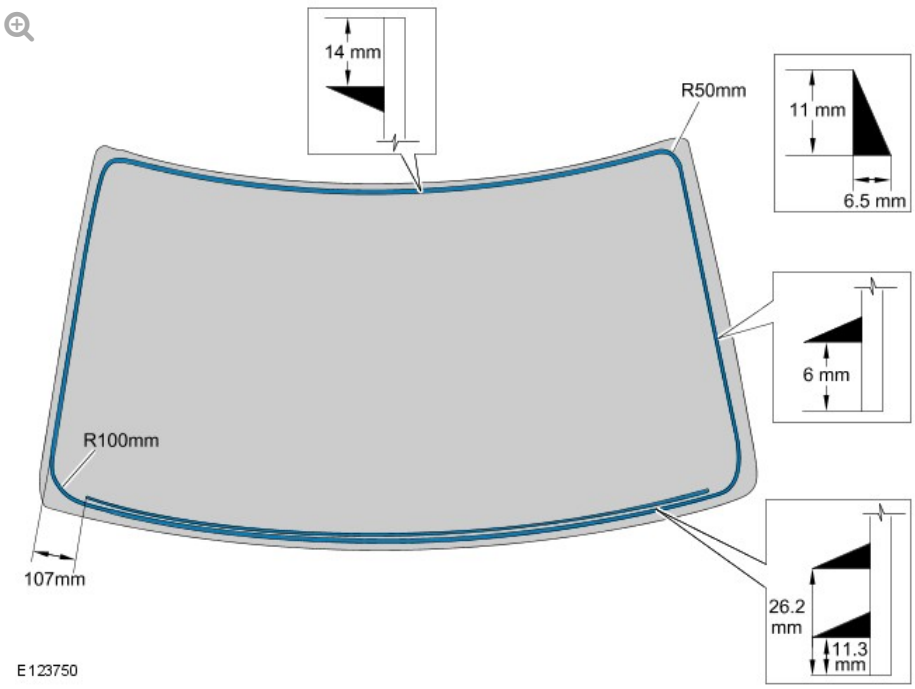

Apply a continuous bead of sealant to the windshield glass as shown.

13.

CAUTION:

> Make sure that the deck height of the windshield glass is 11mm along both A-pillars. Failure to follow this instruction may result in damage to the vehicle.

With assistance, install and align the windshield glass.

- Lightly press the windshield glass to seat the sealant.

14. Remove the masking tape and exterior paintwork protection.

15. Test the windshield glass sealant for leaks.

- If water is used as a means for the leak check, then allow sealant to dry before testing.
- Spray water around the windshield glass, mark any area that leaks. Dry the windshield glass and sealant before applying additional sealant.

16. Connect the heated windshield glass element, electrical connectors.

17. Install the A-pillar trim panels.
For additional information, refer to: A-Pillar Trim Panel (501-05 Interior Trim and Ornamentation, Removal and Installation).

18. Install the interior rear view mirror.
For additional information, refer to: Interior Rear View Mirror (501-09 Rear View Mirrors, Removal and Installation).

19. Install the cowl panel grille.
For additional information, refer to: Cowl Panel Grille (501-02 Front End Body Panels, Removal and Installation).

20. Install the windshield glass mouldings.
For additional information, refer to: Windshield Moulding (501-11 Glass, Frames and Mechanisms, Removal and Installation).

21. Install the roof mouldings.
For additional information, refer to: Roof Moulding (501-08 Exterior Trim and Ornamentation, Removal and Installation).

2012.0 RANGE ROVER (LM), 501-11

GLASS, FRAMES AND MECHANISMS

WINDSHIELD GLASS - ARMOURED (G840488)

REMOVAL AND INSTALLATION

76.81.01	GLASS/SEALING RUBBER - WINDSHIELD - RENEW	ALL DERIVATIVES	1.7	USED WITHINS	+

REMOVAL

windshield specification drawing

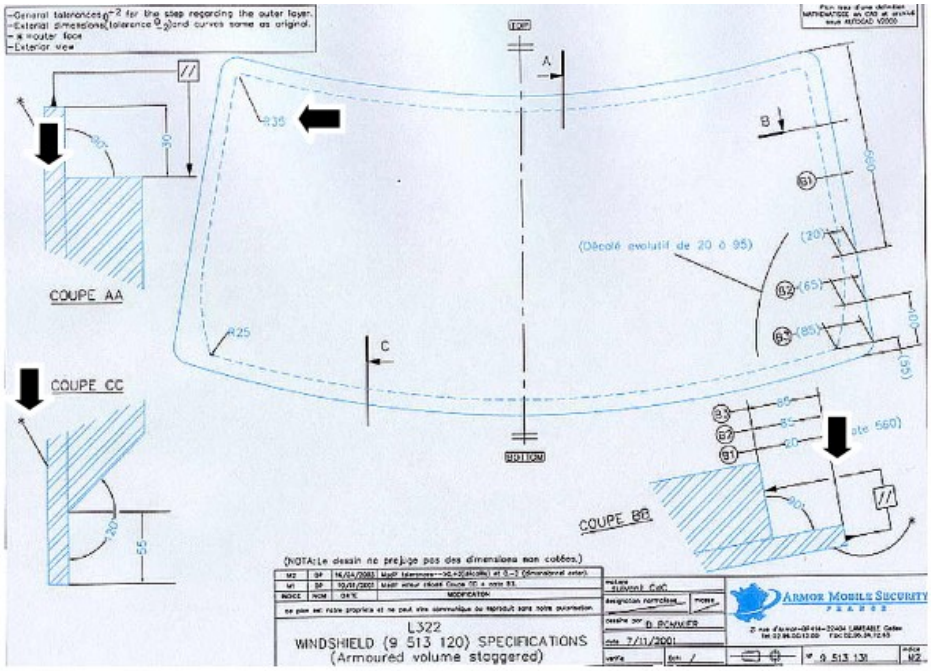

E72440

CAUTION:

Protect the paintwork before attempting to remove the windshield.

1. Remove the windshield lower finisher as described in the Range Rover Workshop Manual.

2. Remove both windshield side finishers as described in the Range Rover Workshop Manual.

3. Taking care to avoid damaging the finisher, carefully cut through the sealant between the finisher and the windshield.

4. Protect the front edge of the roof, and remove the rubber seal between the roof and the screen.

5. Place adhesive tape around the edge of the windshield and, starting at position (1), cut around the edge of the glass using a special diamond disk. Cut 3 mm (0.12 inch) outside the dimension on the drawing of the windshield at the start of this procedure.

6. 

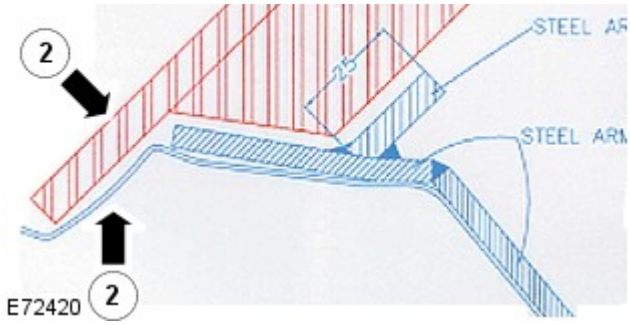

Using a pneumatic knife, cut the rubber and PU seals between the glass frame and the glass following the arrow (2). Remove the outer perimeter of the glass.

7. Using a pneumatic knife, cut the PU seal between the armoured frame and the armoured glass. Remove all the remaining sealer and clean the surface.

8. **WARNING:**

> The windshield is extremely heavy and four people are needed to remove it safely.

Attach to suction cups to the windshield and remove from the vehicle by pulling from the outside and pushing from the inside.

9. Clean all the seal remaining around the periphery of the frame.

INSTALLATION

1. **WARNING:**

> The windshield is extremely heavy. Ensure that sufficient people are available to lift the screen safely.

With 4 people available for lifting the windshield, attach suction cups and position the windshield in the vehicle, without a seal. Check the gaps around the edge of the windshield mark the

Check the gaps around the edge of the windshield mark the position of the screen then remove the windshield.

2. Clean the surface of the glass which will be in contact with the PU with Betawipe 4000.

3. Apply glass primer (Betaprime 5001) on the area of the glass which will be in contact with the frame and also on the side of the armoured glass. Wait 1 hour for the primer to dry.

4. Apply painted sheet steel primer (Betaprime 5404) on the frame. Wait 1 hour for the primer to dry.

5. 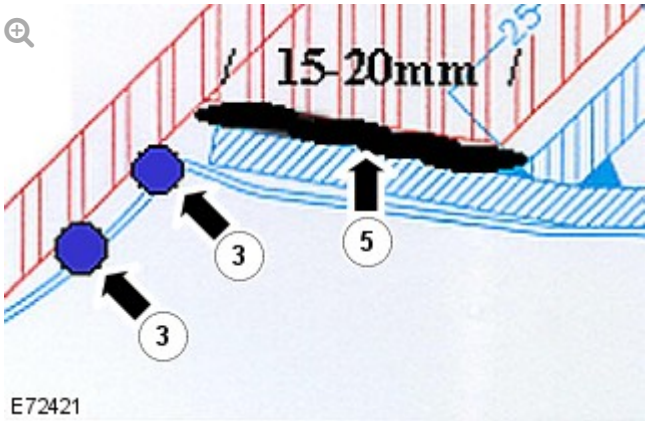

Apply two beads of non adhesive seal (Sika 710), around the windshield frame, (3).

6. 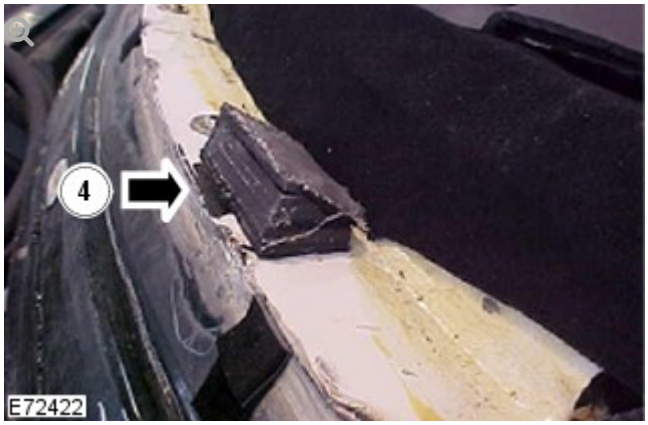

Position rubber pads (4) at the bottom of the window frame and glue in position. The windshield will locate on these pads.

7. Make sure all the surfaces are clean and no dust is behind the glass.

Around the edge of the armoured frame and also around the side of the armoured glass make a 15 to 20 mm (0.6 to 0.8 in) thick PU (Betaseal HV3) seal (5).

8. **WARNING:**

> The window glass is extremely heavy. Ensure that sufficient people are available to lift the screen safely.

With 4 people available for lifting the windshield, attach suction cups and position the screen in the aperture.

9. Position the windshield in the aperture and secure in place with adhesive tape. Leave the screen for 24 hours.

10. 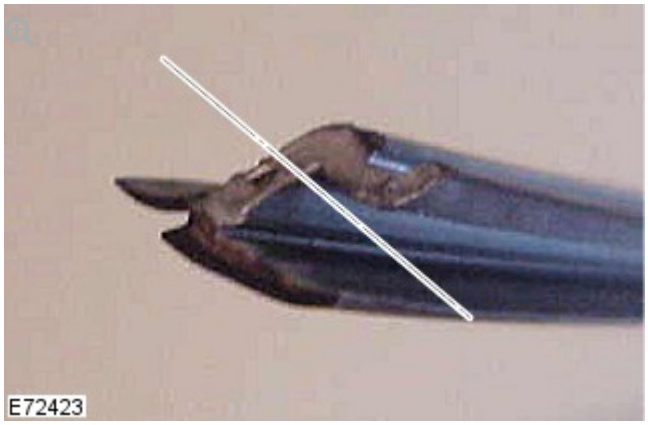

Cut the seal as illustrated. Position the modified finishing rubber seal (Ref: DCB500050PMD) and mark the position of the seal on the glass with adhesive tape. Then remove the seal.

11. Degrease the glass with Betawipe 4000 and apply glass primer (Betaprime 5001) on the glass where the seal will be glued.

12. Apply painted sheet steel primer (Betaprime 5404) inside the seal. Make a 4 mm PU (Betaseal HV3) seal on the glass and place the seal in position.

13. 

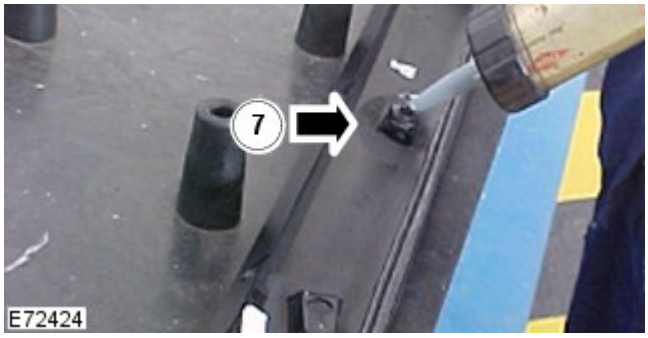

Using soapy water smooth the windshield seal.

14.

Apply Betaseal HV3 to the finisher and 'A' post as illustrated (7, 8). Fit both finishers, fit the clips and retain the finishers in place with adhesive tape.

15.

Fit the windshield lower finisher as described in the Range Rover Workshop Manual.

16. Clean the glass and polycarbonate window with a non aggressive solution (isopropyl, alcohol, teepol).

2012.0 RANGE ROVER (LM), 501-11

GLASS, FRAMES AND MECHANISMS

WINDSHIELD MOULDING (G913864)

REMOVAL AND INSTALLATION

76.43.39	MOULDING - WINDSHIELD - SIDE - RENEW	ALL DERIVATIVES	0.1	USED WITHINS	+

REMOVAL

1.

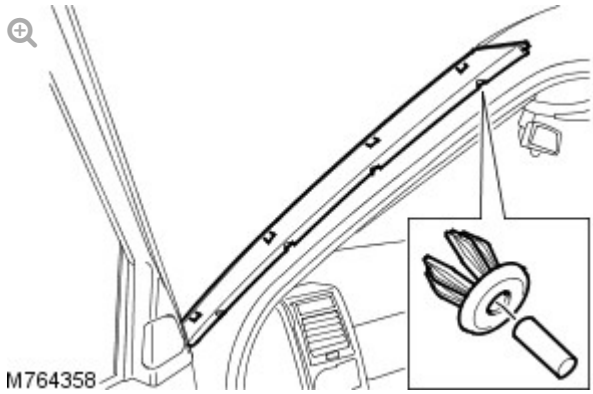

Remove the 4 clips securing the windscreen moulding.

2. Remove the windshield moulding.

   - Release the 4 clips.

3. Remove and discard the 4 clips from the windshield moulding.

4. Remove and discard the 4 clips from the A-pillar.

INSTALLATION

1. Install new clips to the A-pillar.

2. Install new clips to the windshield moulding.

3. Install the windshield moulding.
   - Secure with the new clips.

2012.0 RANGE ROVER (LM), 501-11

GLASS, FRAMES AND MECHANISMS

REAR DOOR FIXED WINDOW GLASS (C1061670)

GLASS (G1061679)

REMOVAL AND INSTALLATION

76.31.31	QUARTER LIGHT - FIXED - REAR DOOR - RENEW	ALL DERIVATIVES	1.3	USED WITHINS	+

REMOVAL

1. Remove the rear door window glass.
   For additional information, refer to: Rear Door Window Glass (501-11 Glass, Frames and Mechanisms, Removal and Installation).

2. 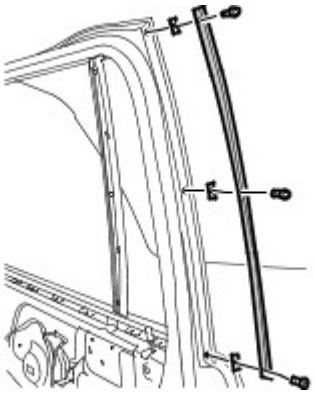

   Remove the rear door frame trim panel.
   - Remove the 3 screws.
   - Remove the 3 clips.

3. Remove the rear door upper trim panel.

4. 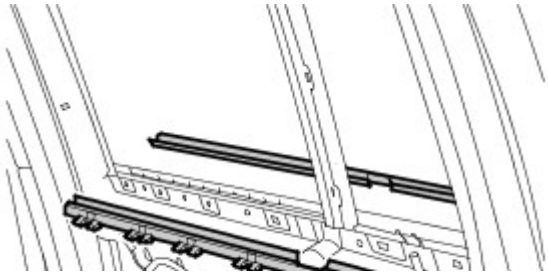

Remove the rear door glass outer waist seal.

5. Remove the rear door glass inner waist seal.

6. 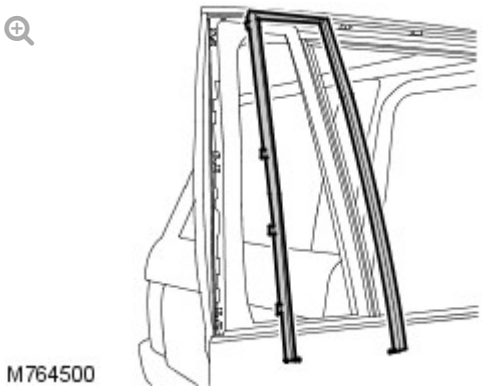

Remove the rear quarter window glass trim panel.

7. 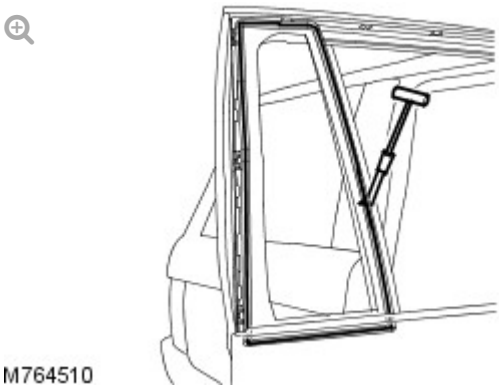

Remove the rear quarter window glass.

- Carefully cut through the sealant using a glazing knife.

INSTALLATION

1. Carefully remove the sealant from the door frame to leave a smooth surface.

2. Carefully remove the sealant from the rear quarter window glass, without damaging the obscuration band.

3. Clean the component mating faces.

4. **CAUTION:**

> Correct preparation of body apertures “post painting” to ensure satisfactory glass adhesion, must be carried out in line with industry practise.

Apply etch primer to any bare metal.

5. Apply primer over the etch primer.

6. Fit pre-cut nozzle to sealer cartridge, remove lid, shake out crystals and fit cartridge to applicator gun. If necessary modify the nozzle to achieve required bead section.

7. 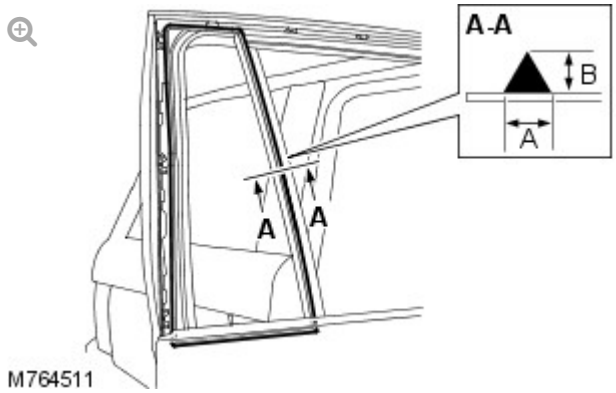

Apply a continuous bead of sealant to the door frame. Dimension A = 7mm (0.28 in). Dimension B = 11 mm (0.44 in).

8. With assistance, install and align the rear quarter window glass.

9. Install the rear quarter window glass trim panel.

10. Install the rear door glass inner waist seal.

11. Install the rear door glass outer waist seal.

12. Install the rear door upper trim panel.

13. Install the rear door frame trim panel.
    - Install the 3 clips.
    - Install the 3 screws.

14. Install the rear door window glass.
    For additional information, refer to: Rear Door Window Glass (501-11 Glass, Frames and Mechanisms, Removal and Installation).

15. Test the sealer for leaks, apply additional sealer if necessary. If water is used, allow sealer to dry before testing. Spray water around the glass and check for leaks. Mark any area that leaks. Dry the glass and sealer then apply additional sealer.

INSTRUMENT PANEL AND CONSOLE

Torque Specifications

DESCRIPTION	NM	LB-FT
Floor console lid Torx bolts	3	2
Floor console Torx bolts	10	7

INSTRUMENT PANEL AND CONSOLE

FLOOR CONSOLE – TDV8 3.6L DIESEL/V8 5.0L PETROL/V8 S/C 5.0L PETROL (G860310)

REMOVAL AND INSTALLATION

76.25.01	CONSOLE ASSEMBLY – FLOOR – RENEW	ALL DERIVATIVES	2	USED WITHINS	+

REMOVAL

1. Disconnect the battery ground cable.
   For additional information, refer to: Specifications (414-00 Charging System - General Information, Specifications).

2. Remove the LH front seat.
   For additional information, refer to: Front Seat (501-10 Seating, Removal and Installation).

3. 

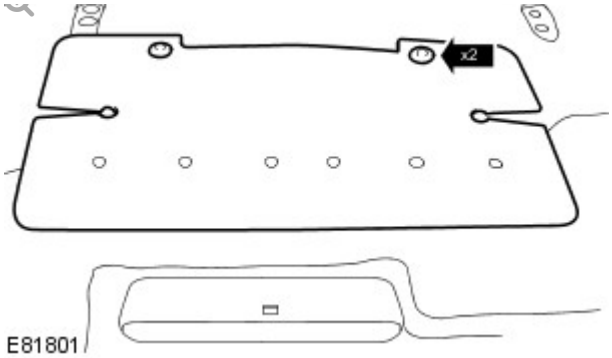

Remove the LH floor wiring harness trim panel.

- Remove the 2 clips.

4.

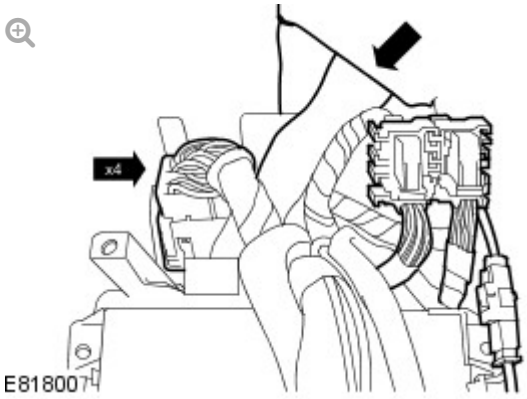

Reposition the floor console wiring harness.

- Disconnect the 4 electrical connectors.
- Reposition the carpet for access.

5. Remove the selector lever knob. For additional information, refer to: Selector Lever Knob (307-05B, Removal and Installation).

6. Remove the LH floor console extension.
For additional information, refer to: Floor Console Extension (501-12 Instrument Panel and Console, Removal and Installation).

7. Remove the RH floor console extension.

- Remove the screw.
- Release the 2 clips.

8. **NOTE:**

Left-hand shown, right-hand similar.

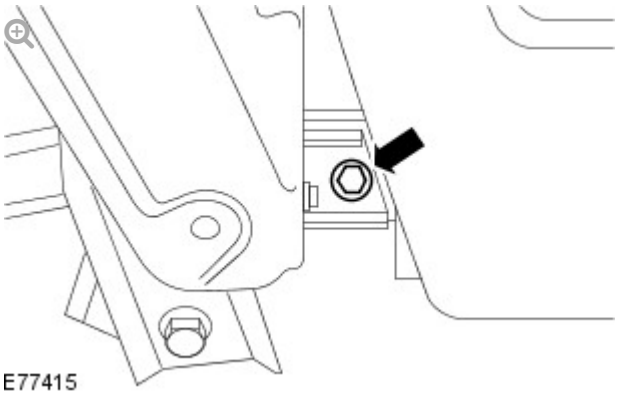

Remove the 2 front bolts from the floor console.

9.

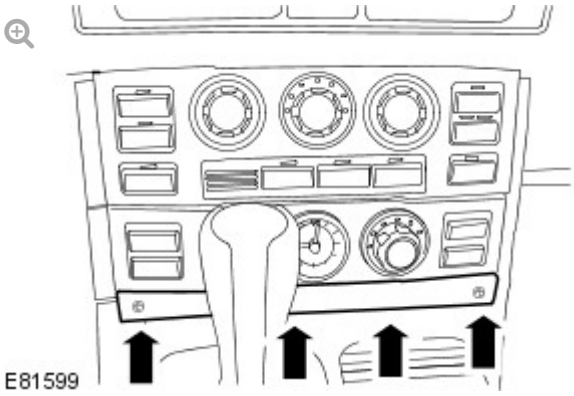

Remove the climate controlled seat switch trim panel.

- Carefully release the 4 clips.
- Remove the 2 front screws from the floor console upper panel.

10.

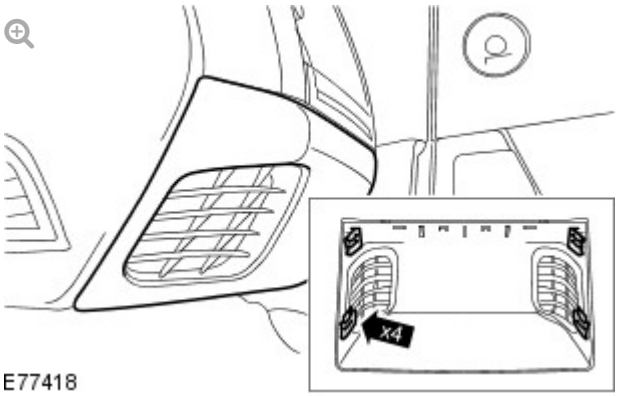

Remove the rear floor register.

- Release the 4 clips.

11. **NOTE:**

Left-hand shown, right-hand similar.

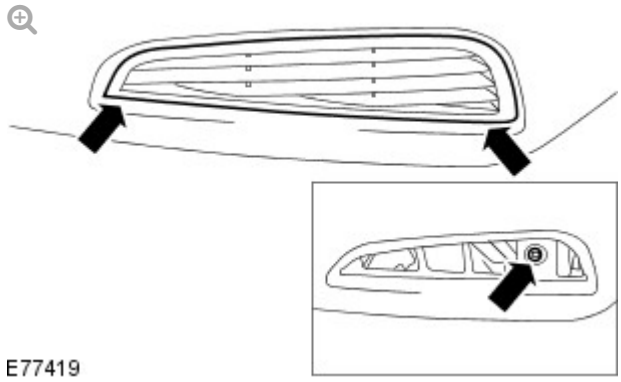

Remove the 2 rear bolts from the floor console.

- Remove the floor console rear LH floor register.
- Remove the floor console rear LH bolt.
- Remove the floor console rear RH floor register.
- Remove the floor console rear RH bolt.

12.

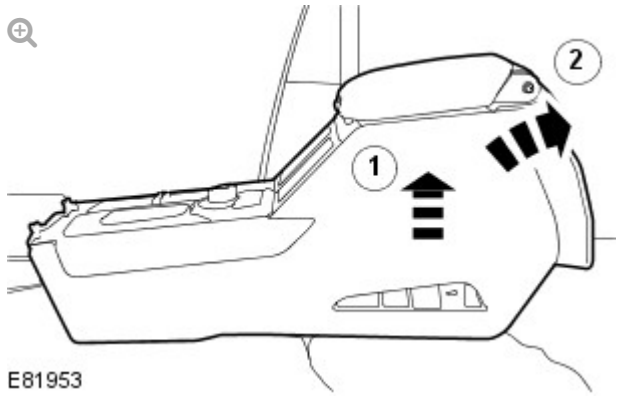

Remove the floor console.

- Reposition the floor console upwards and rearwards.

13. Remove the auxiliary climate control rear register.
For additional information, refer to: Register (412-03 Auxiliary Climate Control, Removal and Installation).

14.

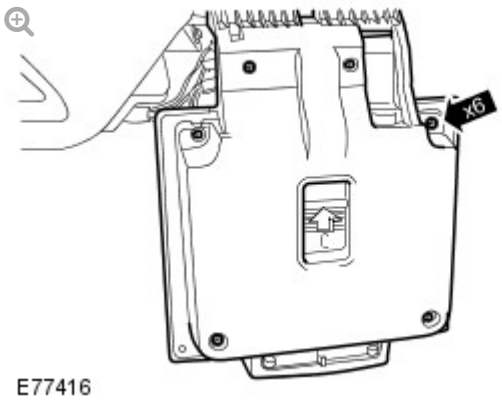

Remove the cellular phone cradle assembly lower trim panel.

- Reposition the cellular phone cradle assembly.
- Remove the 6 screws.

15.

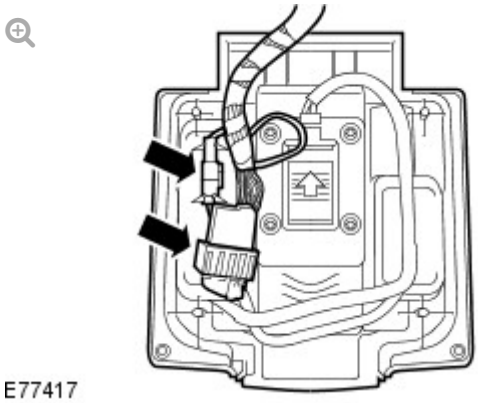

Remove the cellular phone cradle assembly.

- Disconnect the 2 electrical connectors.
- Release the 2 electrical connectors from the clips.

16.

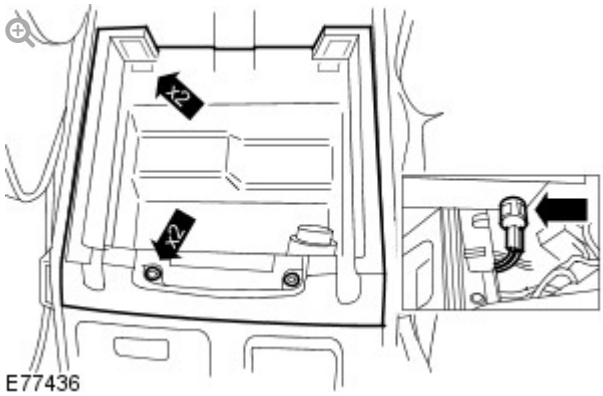

Remove the floor console stowage compartment.

- Open the floor console stowage compartment lid.
- Remove the 2 screws.
- Carefully release the 2 clips.
- Disconnect the cigar lighter electrical connector.

17.

CAUTION:

Make sure damage does not occur to the vehicle trim when removing the centre console side finisher trim panel.

NOTE:

Left-hand shown, right-hand similar.

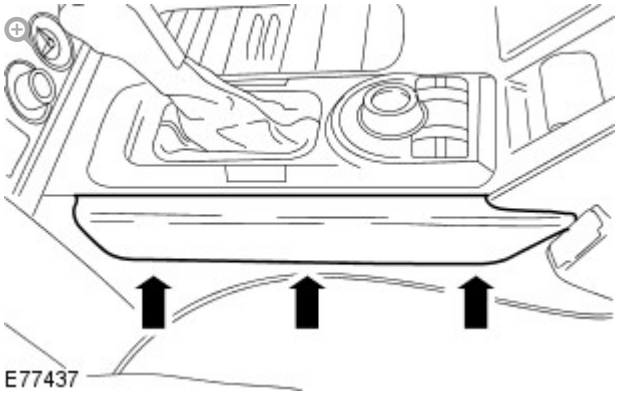

Remove the center console LH side finisher trim panel.

- Using a suitable tool, carefully release the 3 clips.

18.

CAUTION:

Make sure damage does not occur to the vehicle trim when removing the centre console side finisher trim panel.

Remove the center console RH side finisher trim panel.

- Using a suitable tool, carefully release the 3 clips.

19.

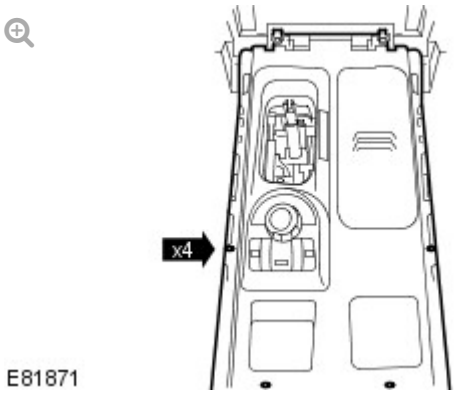

Reposition the floor console upper panel.

- Remove the 4 screws.
- Using a suitable tool, carefully release the 4 clips.

20.

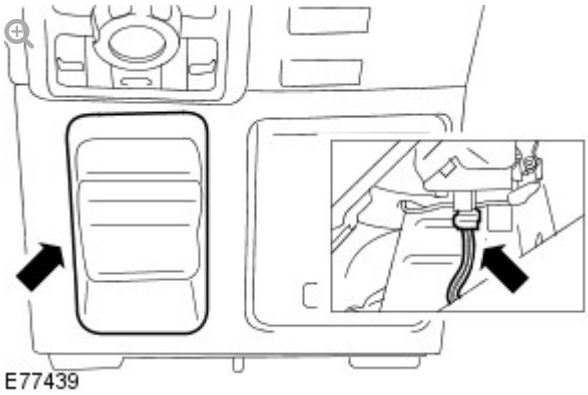

Disconnect the parking brake switch electrical connector.

21.

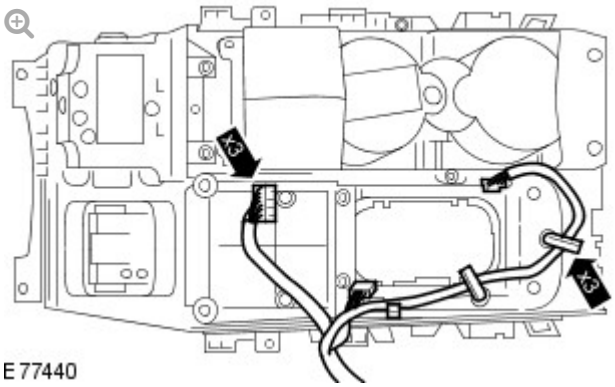

Remove the floor console upper panel.

- Release the 3 wiring harness clips.
- Disconnect the 3 electrical connectors.

22.

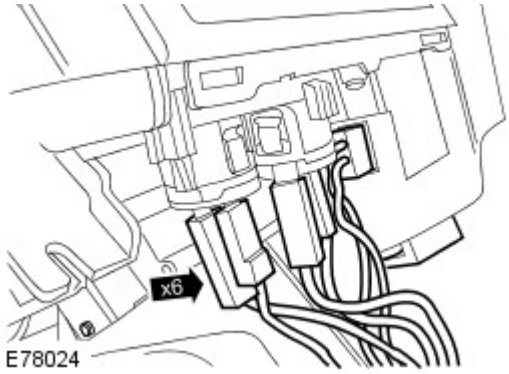

Disconnect the 6 electrical connectors from the rear passenger entertainment control panel.

23.

NOTE:

Do not disassemble further if the component is removed for access only.

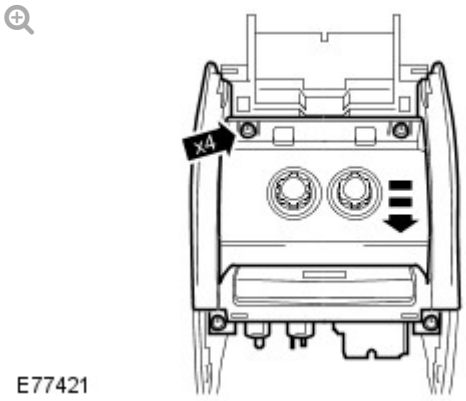

Remove the floor console rear trim panel.

- Remove the 4 screws.

24.

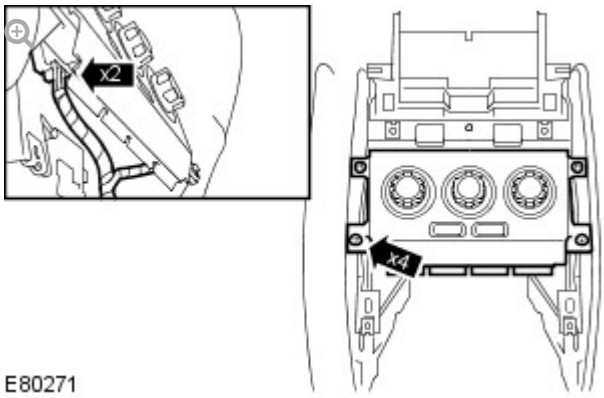

Remove the rear auxiliary climate control assembly.

- Remove the 4 screws.
- Disconnect the 2 electrical connectors.

25. **NOTE:**

Left-hand shown, right-hand similar.

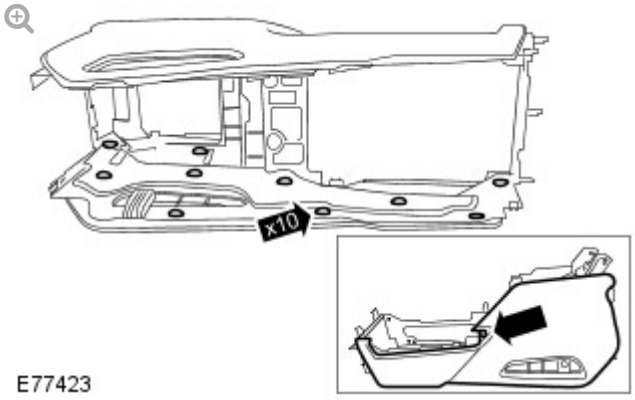

Remove the floor console LH finisher trim panel.

- Remove the 11 screws.

26. Remove the floor console RH finisher trim panel.

- Remove the 11 screws.

27. Remove the 14 clips from the floor console.

28. Remove the 2 brackets from the floor console.

- Remove the 2 screws.

INSTALLATION

1. Install the 2 brackets to the floor console.

- Install the 2 screws.

2. Install the 14 clips to the floor console.

3. Install the floor console LH finisher trim panel.
   - Install the 10 screws.
4. Install the floor console RH finisher trim panel.
   - Install the 10 screws.
5. Install the rear auxiliary climate control assembly.
   - Connect the 2 electrical connectors.
   - Install the 4 screws.
6. Install the floor console rear trim panel.
   - Install the 4 screws.
7. Connect the 6 electrical connectors to the rear passenger entertainment control panel.
8. Install the floor console upper panel.
   - Connect the 3 electrical connectors.
   - Attach the 3 wiring harness clips.
9. Connect the parking brake switch electrical connector.
10. Reposition the floor console upper panel.
    - Secure the 4 clips.
    - Install the 4 screws.
11. Install the center console LH side finisher trim panel.
    - Secure the 3 clips.
12. Install the center console RH side finisher trim panel.
    - Secure the 3 clips.
13. Install the floor console stowage compartment.

- Connect the cigar lighter electrical connector.
- Secure the 2 clips.
- Install the 2 screws.
- Close the floor console stowage compartment lid.

14. Install the cellular phone cradle assembly.
    - Attach the 2 electrical connectors to the clips.
    - Connect the 2 electrical connectors.

15. Install the cellular phone cradle assembly lower trim panel.
    - Install the six screws.
    - Reposition the cellular phone cradle assembly.

16. Install the auxiliary climate control rear register.
    For additional information, refer to: Register (412-03 Auxiliary Climate Control, Removal and Installation).

17. **CAUTION:**

    Make sure the floor console is correctly located and installed. Failure to follow this instruction will result in damage to the vehicle trim.

    Install the floor console.
    - Reposition the floor console to its original position.

18. Install the 2 rear bolts to the floor console.
    - Install the floor console rear RH bolt.
    - Install the floor console rear RH floor register.
    - Install the floor console rear LH bolt.
    - Install the floor console rear LH floor register.

19. Install the rear floor register.

19. Install the rear floor register.
    - Secure the 4 clips.

20. Install the climate controlled seat switch trim panel.
    - Install the 2 front screws to the floor console upper panel.
    - Secure the 4 clips.

21. Install the 2 front bolts to the floor console.
    - Install the floor console front RH bolt.
    - Install the floor console front LH bolt.

22. Install the LH floor console extension.
    For additional information, refer to: Floor Console Extension (501-12 Instrument Panel and Console, Removal and Installation).

23. Install the RH floor console extension.
    - Install the screw.
    - Secure the 2 clips.

24. Install the selector lever knob. For additional information, refer to: Selector Lever Knob (307-05B, Removal and Installation).

25. Reposition the floor console wiring harness.
    - Reposition the carpet for access.
    - Connect the 4 electrical connectors.

26. Install the LH floor wiring harness trim panel.
    - Install the 2 clips.

27. Install the LH front seat.
    For additional information, refer to: Front Seat (501-10 Seating, Removal and Installation).

28. Connect the battery ground cable.
    For additional information, refer to: Specifications (414-00 Charging

System - General Information, Specifications).

2012.0 RANGE ROVER (LM), 501-12

INSTRUMENT PANEL AND CONSOLE

FLOOR CONSOLE CUP

FLOOR CONSOLE CUP HOLDER – TDV8 3.6L DIESEL/V8 5.0L PETROL/V8 S/C 5.0L PETROL (G909466)

REMOVAL AND INSTALLATION

76.25.27	CUP HOLDERS – FLOOR CONSOLE – RENEW	ALL DERIVATIVES	0.6	USED WITHINS	+

REMOVAL

1. Disconnect the battery ground cable.
   For additional information, refer to: Specifications (414-00, Specifications).

2. Remove the floor console upper panel.
   For additional information, refer to: Floor Console Upper Panel (501-12, Removal and Installation).

3. 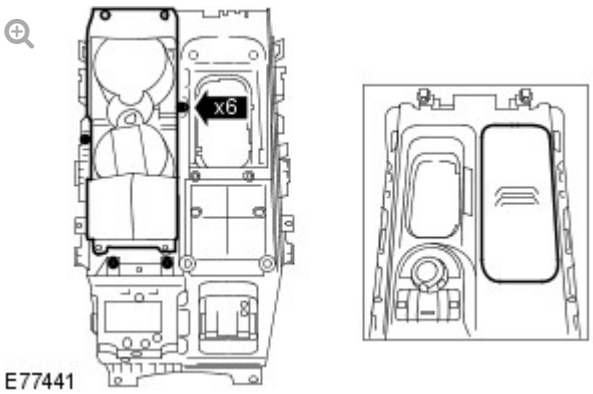

   Remove the floor console cup holder.

   - Remove the 6 screws.

INSTALLATION

INSTALLATION

1. Install the floor console cup holder.
   - Install the 6 screws.
2. Install the floor console upper panel.
   For additional information, refer to: Floor Console Upper Panel (501-12, Removal and Installation).
3. Connect the battery ground cable.
   For additional information, refer to: Specifications (414-00, Specifications).

2012.0 RANGE ROVER (LM), 501-12

INSTRUMENT PANEL AND CONSOLE

FLOOR CONSOLE EXTENSION

(G860315)

REMOVAL AND INSTALLATION

REMOVAL

1.

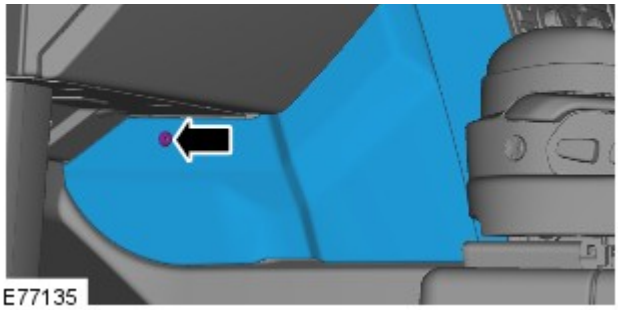

Remove the LH floor console extension.

- Remove the screw.
- Release the 2 clips.

2. **NOTE:**

> Do not disassemble further if the component is removed for access only.

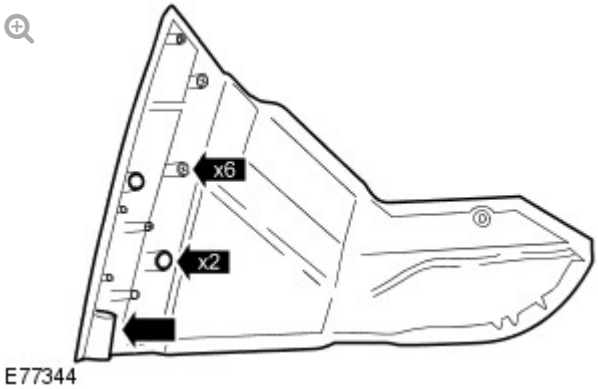

Remove the floor console extension trim panel.

- Remove the rubber isolator.
- Remove the 6 screws.
- Remove the 2 clips.

INSTALLATION

1. Install the floor console extension trim panel.
   - Install the rubber isolator.

- Install the 6 screws.
- Install the 2 clips.

2. Install the LH floor console extension.
   - Secure the 2 clips.
   - Tighten the screw.

2012.0 RANGE ROVER (LM), 501-12

INSTRUMENT PANEL AND CONSOLE

FLOOR CONSOLE STOWAGE COMPARTMENT (G885308)

REMOVAL AND INSTALLATION

REMOVAL

1.

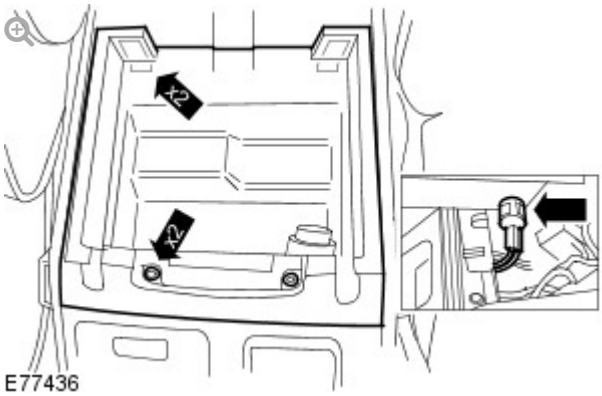

Remove the floor console stowage compartment.

- Open the floor console stowage compartment lid.
- Remove the 2 screws.
- Using a suitable tool, carefully release the 2 clips.

- Disconnect the cigar lighter electrical connector.

2. **NOTE:**

Do not disassemble further if the component is removed for access only.

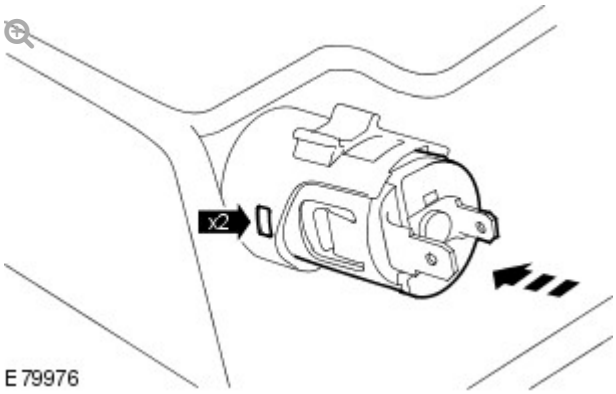

Remove the cigar lighter assembly.

- Remove the cigar lighter.
- With extreme care release the 2 clips and remove the cigar lighter inner housing.
- Remove the cigar lighter housing.

INSTALLATION

1. Install the cigar lighter assembly.

2. **CAUTION:**

Make sure the locating tangs are aligned.

Install the floor console stowage compartment.

- Connect the cigar lighter electrical connector.
- Secure the 2 clips.

- Install the 2 screws.
- Close the floor console stowage compartment lid.

2012.0 RANGE ROVER (LM), 501-12

INSTRUMENT PANEL AND CONSOLE

FLOOR CONSOLE STOWAGE COMPARTMENT LID (G874146)

REMOVAL AND INSTALLATION

76.25.27	CUP HOLDERS - FLOOR CONSOLE - RENEW	ALL DERIVATIVES	0.6	USED WITHINS	+

REMOVAL

1. Position the front seats fully forward.
   - Reposition both of the front seat backrests for access.

2. 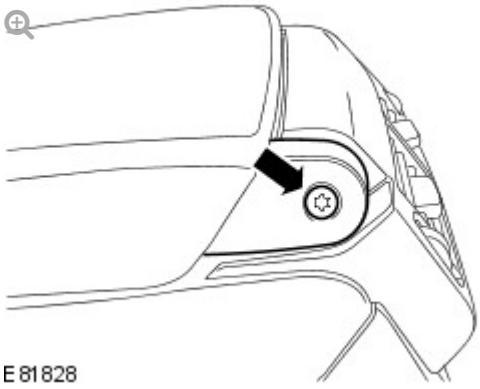

   Remove the floor console stowage compartment lid LH hinge trim.
   - Remove the floor console stowage compartment lid hinge pin LH bolt.

3. **CAUTION:**

   Make sure the suitable tool is fully inserted. Failure to follow this instruction may result in damage to the vehicle trim.

NOTE:

Open the floor console stowage compartment lid.

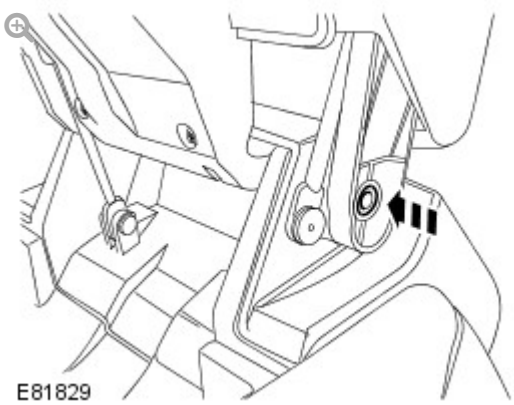

Remove the floor console stowage compartment lid hinge pin.

- Using a suitable tool, remove the floor console stowage compartment lid hinge pin.

4.

CAUTION:

Do not remove the tool at this stage.

NOTE:

Close the floor console stowage compartment lid.

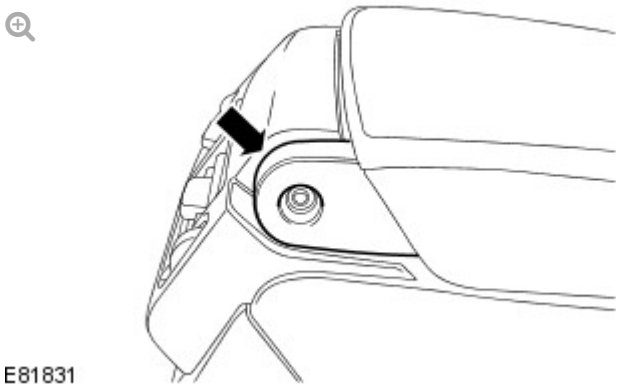

Remove the floor console stowage compartment lid RH hinge trim

Remove the floor console stowage compartment lid RH hinge trim.

5.

CAUTION:

Do not remove the tool at this stage.

NOTE:

Open the floor console stowage compartment lid.

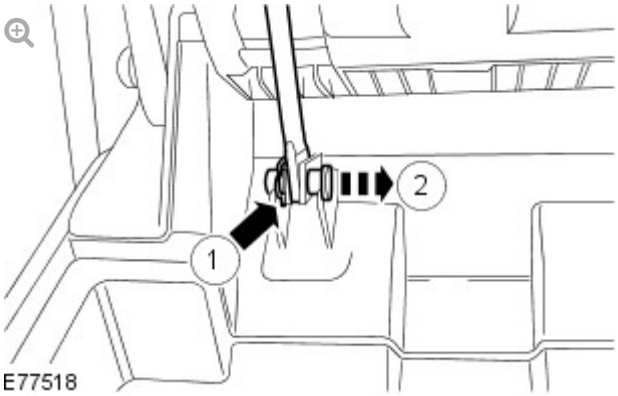

Release the cellular phone handset holder lid damper.

1. Remove the cellular phone handset holder lid damper clevis pin clip.
2. Remove the cellular phone handset holder lid damper clevis pin.

6.

CAUTION:

Do not remove the tool at this stage.

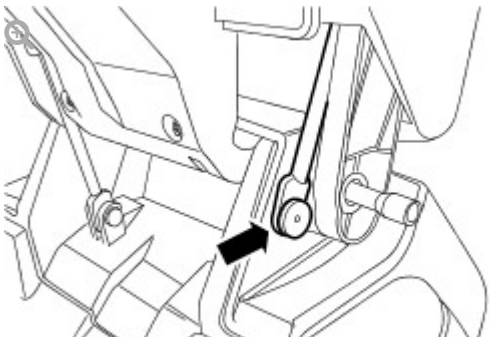

Release the floor console stowage compartment lid damper.

- Release the cellular phone handset holder from the floor console stowage compartment lid.
- Remove the floor console stowage compartment lid damper screw.

7.

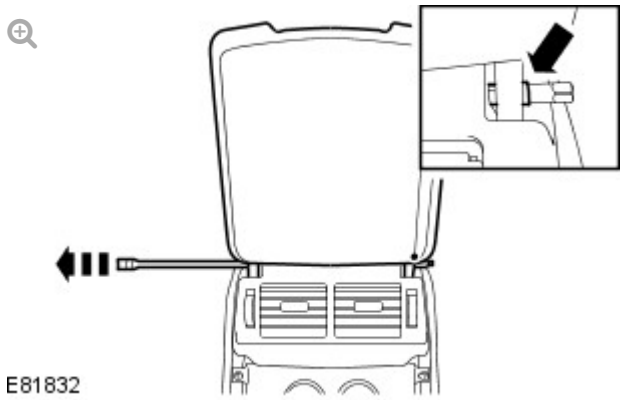

Remove the floor console stowage compartment lid.

- Remove the tool.
- Release the floor console stowage compartment lid hinge pin RH sleeve clips.
- Remove the floor console stowage compartment lid hinge pin RH sleeve.

INSTALLATION

1.

CAUTIONS:

- Make sure the suitable tool is fully inserted. Failure to follow this instruction may result in damage to the vehicle trim.
- Make sure the cellular phone handset holder is aligned with the floor console stowage compartment lid.

Install the floor console stowage compartment lid.

- Install the floor console stowage compartment lid hinge pin RH sleeve.
- Secure the floor console stowage compartment lid hinge pin RH sleeve clips.
- Using a suitable tool, align the floor console stowage compartment lid.

2.

CAUTION:

Do not remove the tool at this stage.

Secure the floor console stowage compartment lid damper.

- Install the floor console stowage compartment lid damper screw.
- Secure the cellular phone handset holder to the floor console stowage compartment lid.

3.

CAUTION:

Do not remove the tool at this stage.

Secure the cellular phone handset holder lid damper.

- Install the cellular phone handset holder lid damper clevis pin.
- Install the cellular phone handset holder lid damper clevis pin clip.

4.

CAUTION:

Do not remove the tool at this stage.

NOTE:

Close the floor console stowage compartment lid.

Install the floor console stowage compartment lid RH hinge trim.

5. **NOTE:**

Open the floor console stowage compartment lid.

Install the floor console stowage compartment lid hinge pin.

- Remove the tool.

6. **NOTE:**

Close the floor console stowage compartment lid.

Install the floor console stowage compartment lid LH hinge trim.

- Install the floor console stowage compartment lid hinge pin LH bolt.

7. Reposition the front seats to their original position.

2012.0 RANGE ROVER (LM), 501-12

INSTRUMENT PANEL AND CONSOLE

FLOOR CONSOLE UPPER PANEL – TDV8 3.6L DIESEL/V8 5.0L PETROL/V8 S/C 5.0L PETROL (G860311)

REMOVAL AND INSTALLATION

REMOVAL

REMOVAL

1. Disconnect the battery ground cable.
   For additional information, refer to: Specifications (414-00 Charging System - General Information, Specifications).

2. 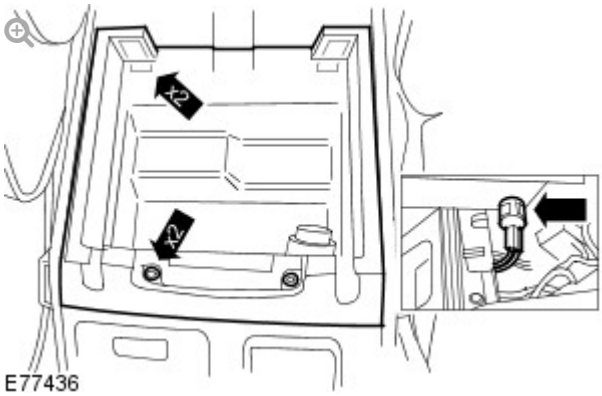

   Remove the floor console stowage compartment.

   - Open the floor console stowage compartment lid.
   - Remove the 2 screws.
   - Carefully release the 2 clips.
   - Disconnect the cigar lighter electrical connector.

3. **CAUTION:**

   Make sure damage does not occur to the vehicle trim when removing the centre console side finisher trim panel.

   NOTE:

   Left-hand shown, right-hand similar.

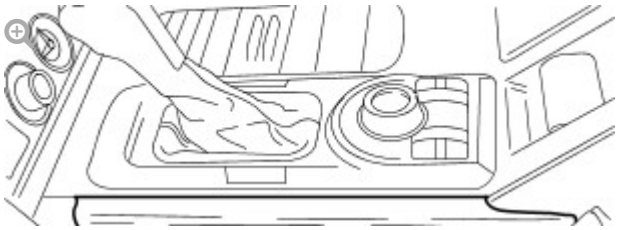

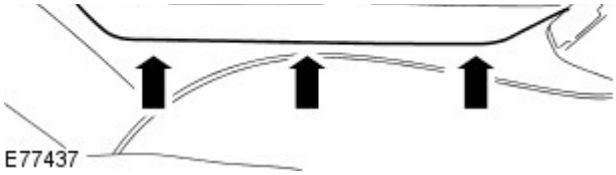

Remove the center console LH side finisher trim panel.

- Using a suitable tool, carefully release the 3 clips.

4. **CAUTION:**

> Make sure damage does not occur to the vehicle trim when removing the centre console side finisher trim panel.

Remove the center console RH side finisher trim panel.

- Using a suitable tool, carefully release the 3 clips.

5. Remove the selector lever knob. For additional information, refer to: Selector Lever Knob (307-05B, Removal and Installation).

6.

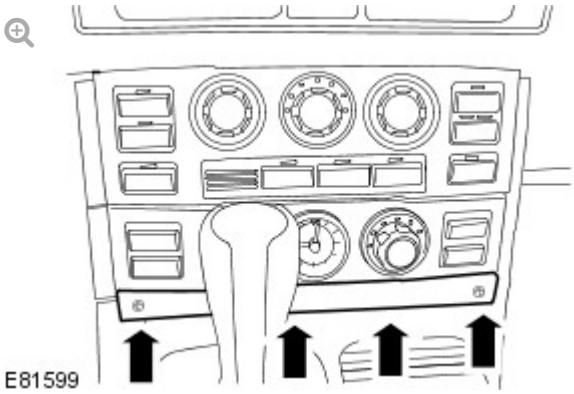

Remove the climate controlled seat switch trim panel.

- Carefully release the 4 clips.
- Remove the 2 front screws from the floor console upper panel.

7.

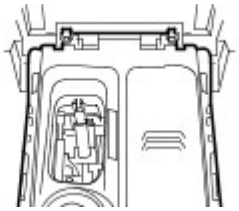

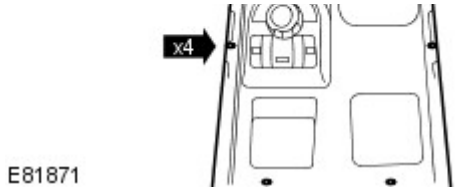

Reposition the floor console upper panel.

- Using a suitable tool, carefully release the 4 clips.
- Remove the 4 screws.

8.

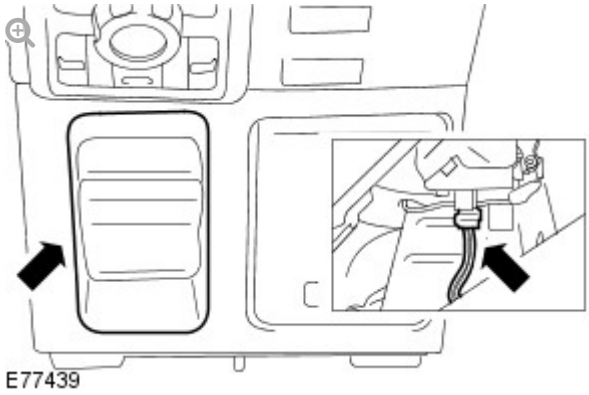

Disconnect the parking brake switch electrical connector.

9.

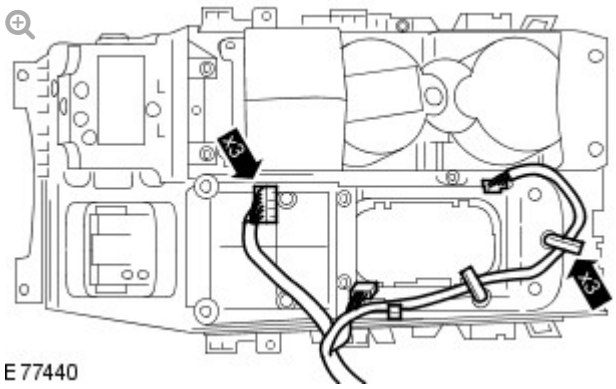

Remove the floor console upper panel.

- Release the 3 wiring harness clips.
- Disconnect the 3 electrical connectors.

10.

NOTE:

Do not disassemble further if the component is removed for access only.

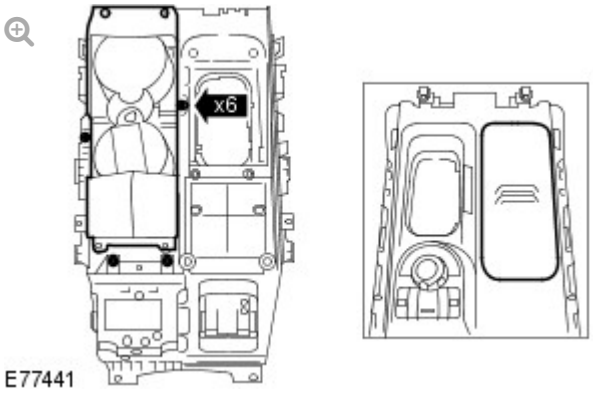

Remove the floor console cup holder.

- Remove the 6 screws.

11.

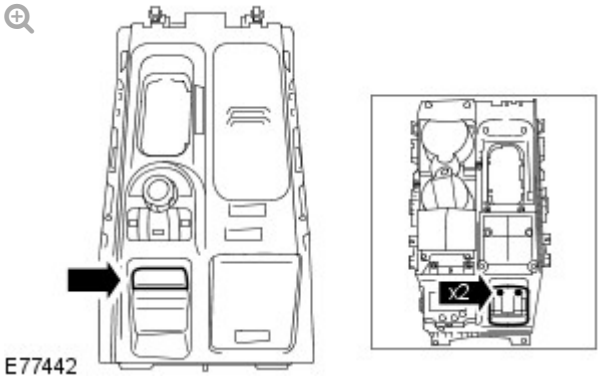

Remove the parking brake switch.

- Remove the parking brake switch trim panel.
- Remove the 2 screws.

12.

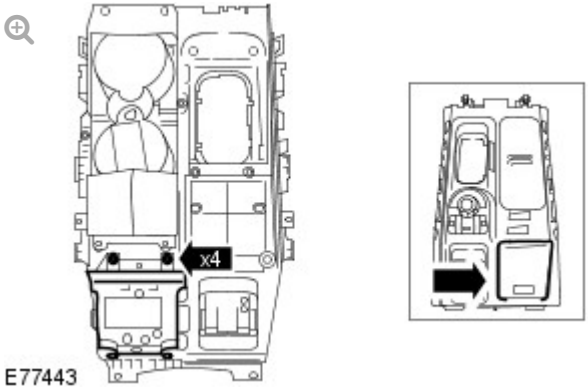

Remove the upper floor console stowage compartment.

- Remove the 4 screws.

13.

13.

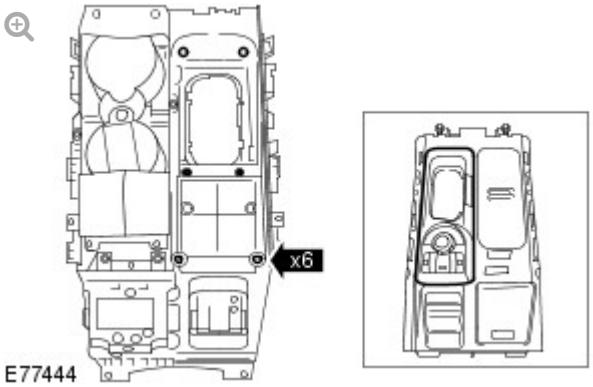

Remove the ride and handling optimization switch assembly.

- Remove the 6 screws.

INSTALLATION

1. Install the ride and handling optimization switch assembly.
   - Install the 6 screws.
2. Install the upper floor console stowage compartment.
   - Install the 4 screws.
3. Install the parking brake switch.
   - Install the 2 screws.
   - Install the parking brake switch trim panel.
4. Install the floor console cup holder.
   - Install the 6 screws.
5. Install the floor console upper panel.
   - Connect the 3 electrical connectors.
   - Attach the 3 wiring harness clips.
6. Connect the parking brake switch electrical connector.
7. Reposition the floor console upper panel.
   - Secure the 4 clips.

- Install the 4 screws.

8. Install the climate controlled seat switch trim panel.
   - Install the 2 front screws to the floor console upper panel.
   - Secure the 4 clips.

9. Install the selector lever knob. For additional information, refer to: Selector Lever Knob (307-05B, Removal and Installation).

10. Install the center console LH side finisher trim panel.
    - Secure the 3 clips.

11. Install the center console RH side finisher trim panel.
    - Secure the 3 clips.

12. Install the floor console stowage compartment.
    - Connect the cigar lighter electrical connector.
    - Secure the 2 clips.
    - Install the 2 screws.
    - Close the floor console stowage compartment lid.

13. Connect the battery ground cable.
    For additional information, refer to: Specifications (414-00 Charging System - General Information, Specifications).

INSTRUMENT PANEL AND CONSOLE

IN-VEHICLE CROSSBEAM - V8 S/C 5.0L PETROL (G1245178)

REMOVAL AND INSTALLATION

REMOVAL

WARNINGS:

- Persons working on the supplemental restraint system (SRS) must be fully trained and have been issued with the safety guidelines.
- Allow a period of 10 minutes to elapse after disconnecting the battery before undertaking any work on the SRS.
- The SRS electrical connectors are unique. DO NOT force, or attempt to connect electrical connectors to the wrong sockets.
- The correct procedures must always be used when working on SRS components.
- It is imperative that before any work is undertaken on the SRS system, the appropriate information is read thoroughly.

- Always disconnect both battery cables before beginning work on the SRS system. Disconnect the ground cable first. Never reverse connect the battery.
- Take extra care when handling supplemental restraint system (SRS) components.

1. Refer to: Cooling System Partial Draining and Vacuum Filling (303-03B Engine Cooling - TDV8 4.4L Diesel, General Procedures).
2. Refer to: Air Conditioning (A/C) System Recovery, Evacuation and Charging - V8 5.0L Petrol/V8 S/C 5.0L Petrol (412-00 Climate Control System - General Information, General Procedures).
3. Refer to: Plenum Chamber (412-01A Air Distribution and Filtering, Removal and Installation).
4. Refer to: Windshield Wiper Motor (501-16 Wipers and Washers, Removal and Installation).
5. Refer to: Instrument Panel Reinforcement (501-12 Instrument Panel and Console, Removal and Installation).
6. Refer to: Steering Column (211-04 Steering Column, Removal and Installation).
7. **CAUTION:**

   Make sure that all openings are sealed. Use new blanking caps.

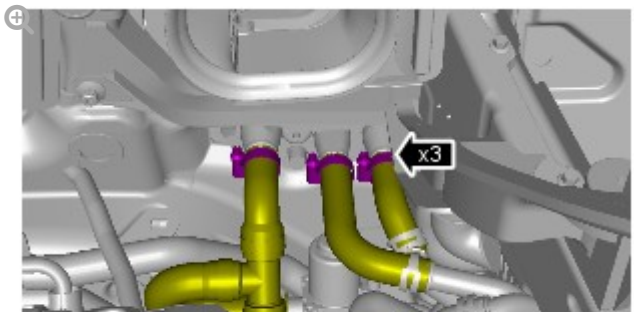

- Using 3 suitable pipe clamps, clamp the 3 heater core coolant hoses.
- Position a container to collect the fluid spillage.

8.

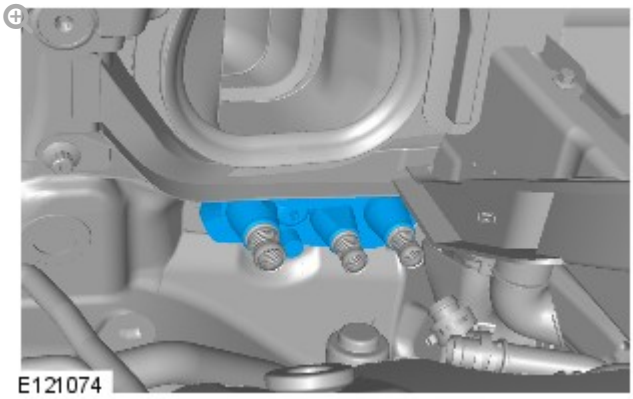

9.

CAUTIONS:

- Make sure that all openings are sealed. Use new blanking caps.
- Install new o-ring seals

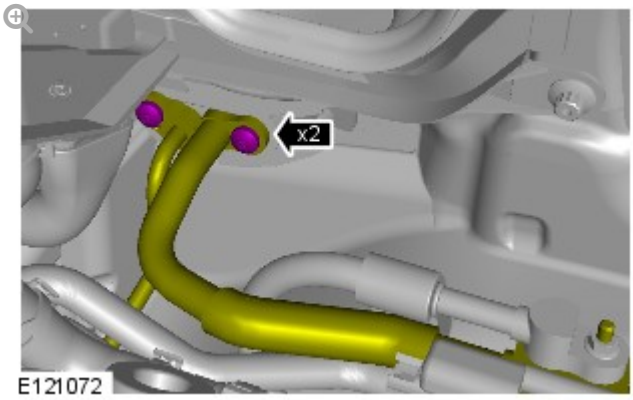

Torque: **25 Nm**

10.

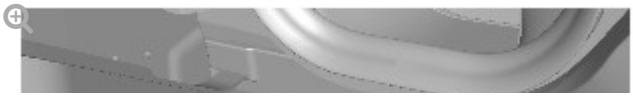

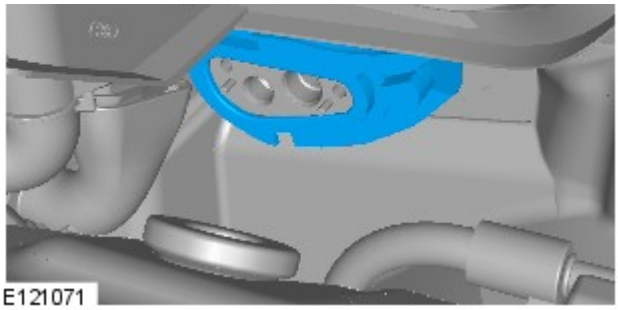
E121071

11.

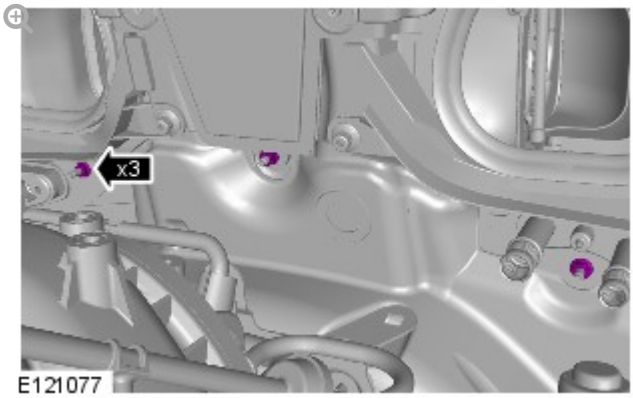

E121077

Torque: **10 Nm**

12.

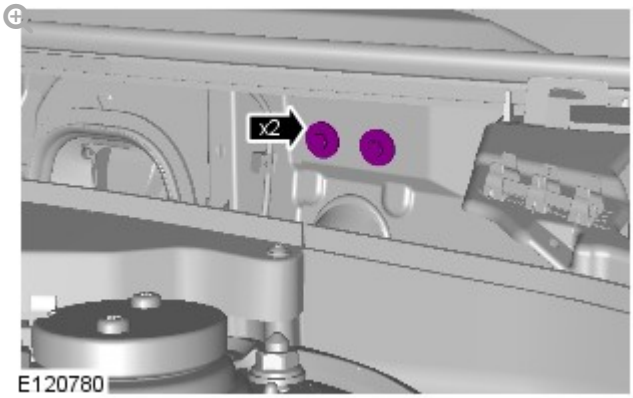

E120780

Torque: **25 Nm**

13.

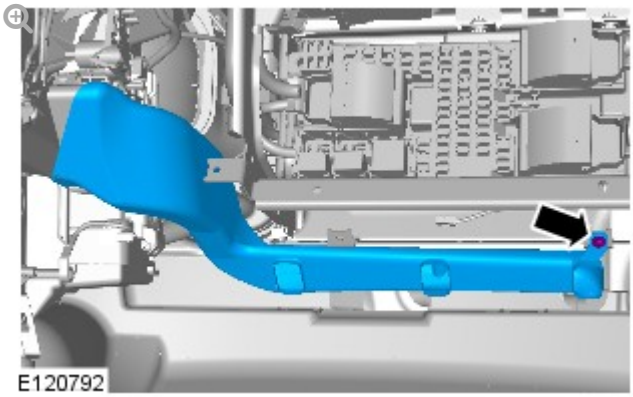
E120792

Torque: **6 Nm**

14.

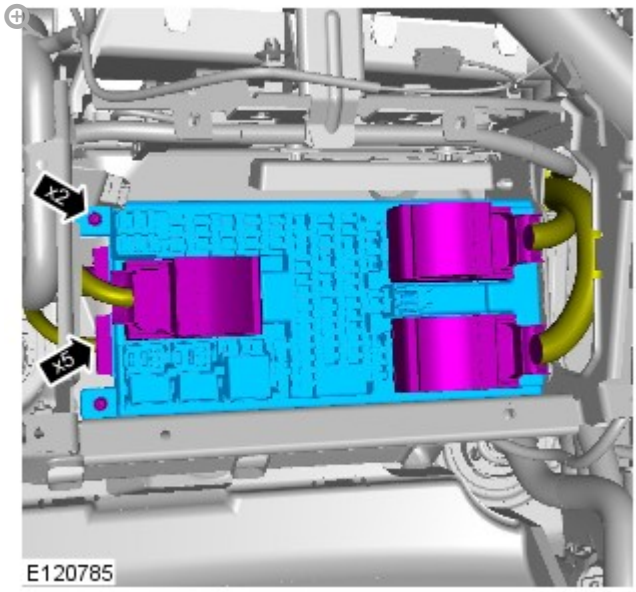

Torque: **8 Nm**

15.

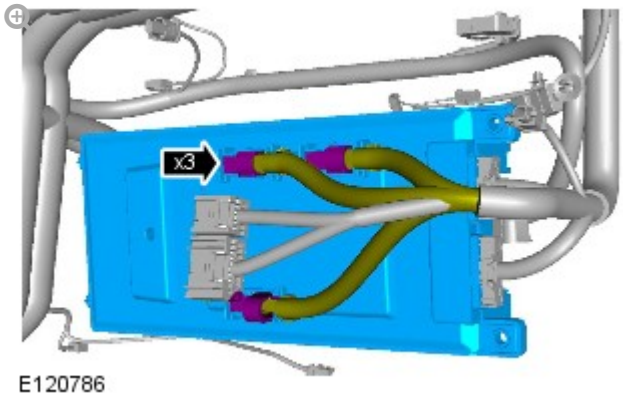

16.

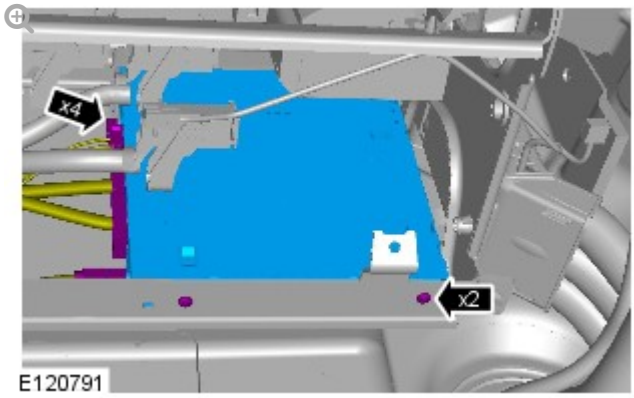

Torque: **6 Nm**

17.

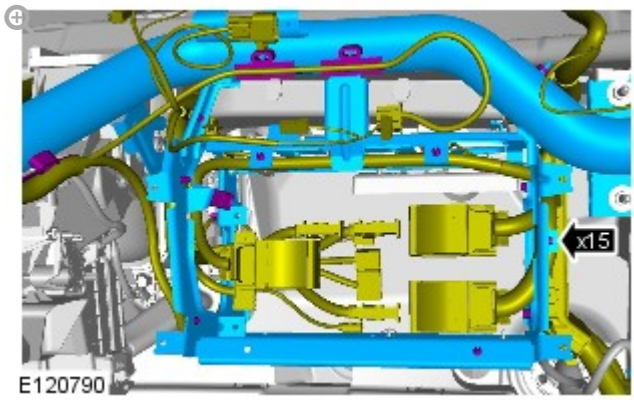

18.

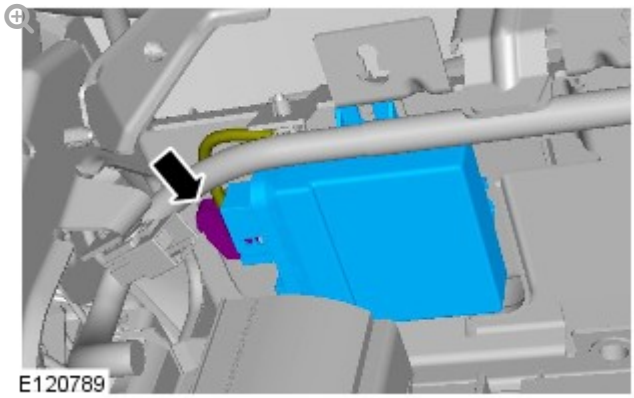

19.

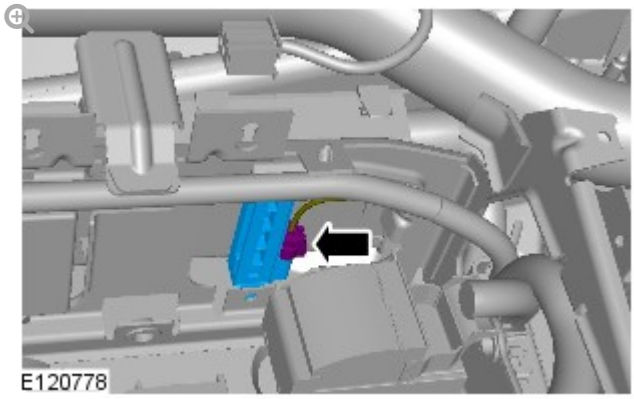

20.

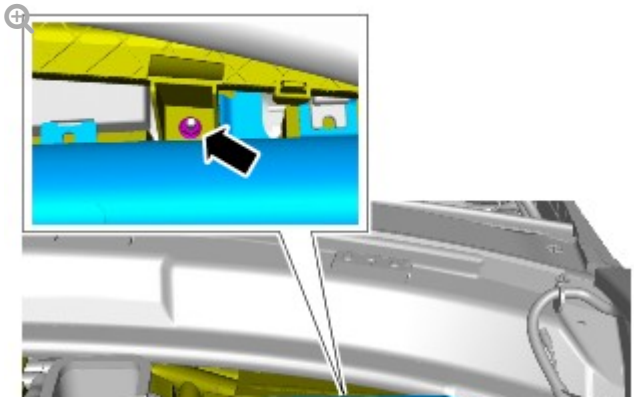

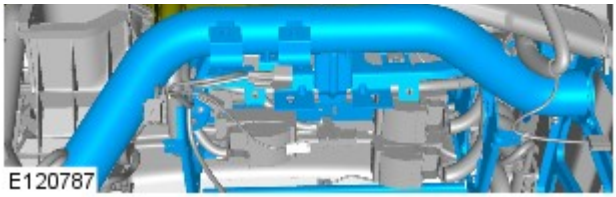

Torque: **6 Nm**

21.

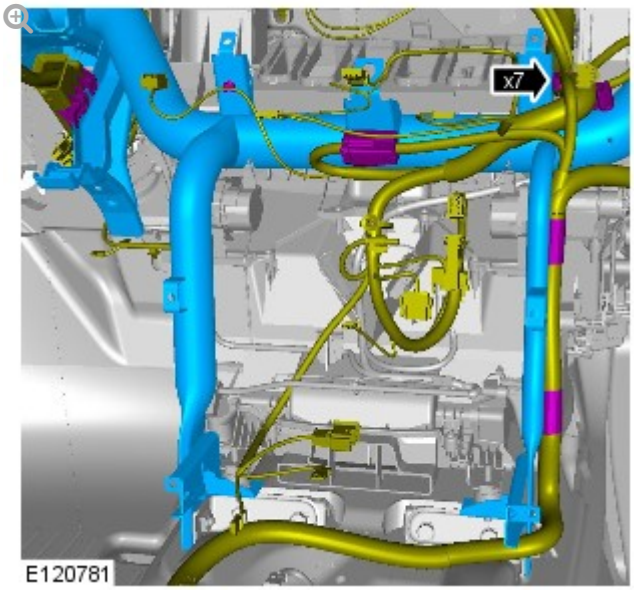

22.

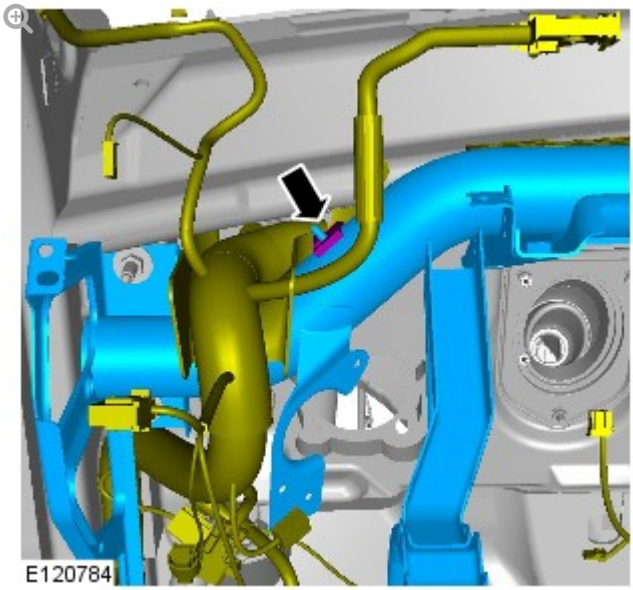

23.

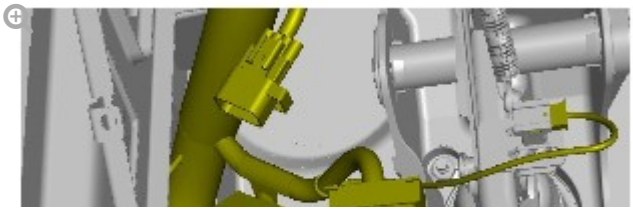

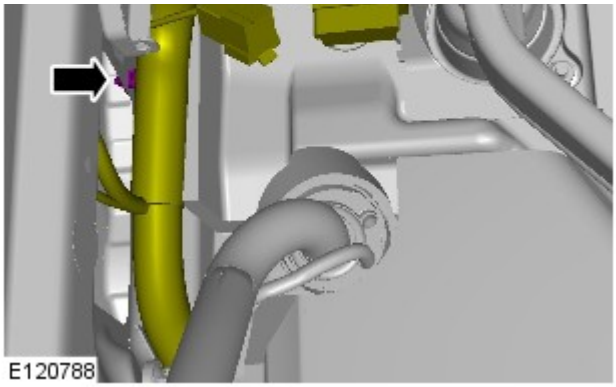

24.

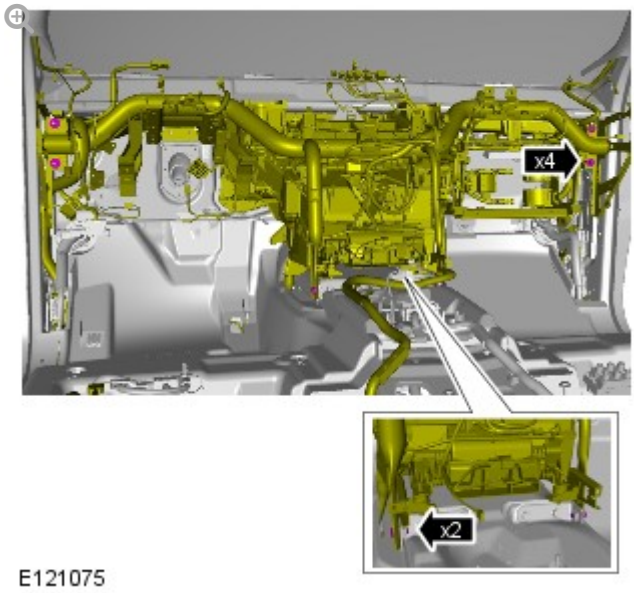

Torque: **25 Nm**

25.

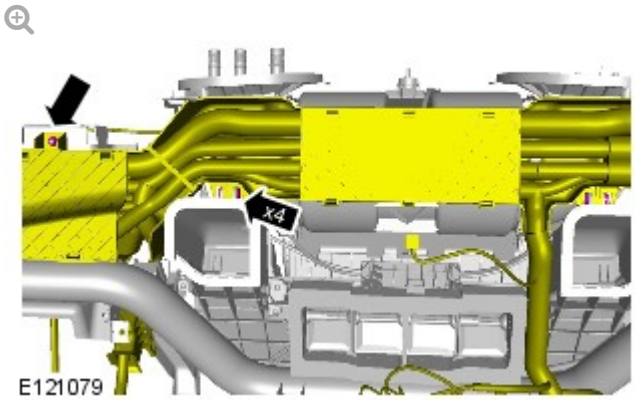

Torque: **6 Nm**

26.

NOTE:

Note the position of the wiring harnesses to aid installation.

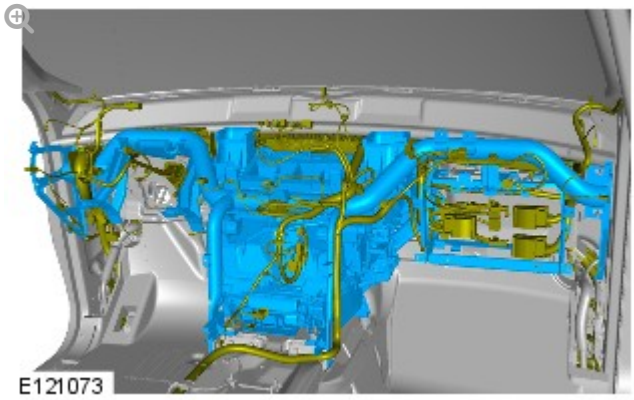

27. **NOTE:**

Do not disassemble further if the component is removed for access only.

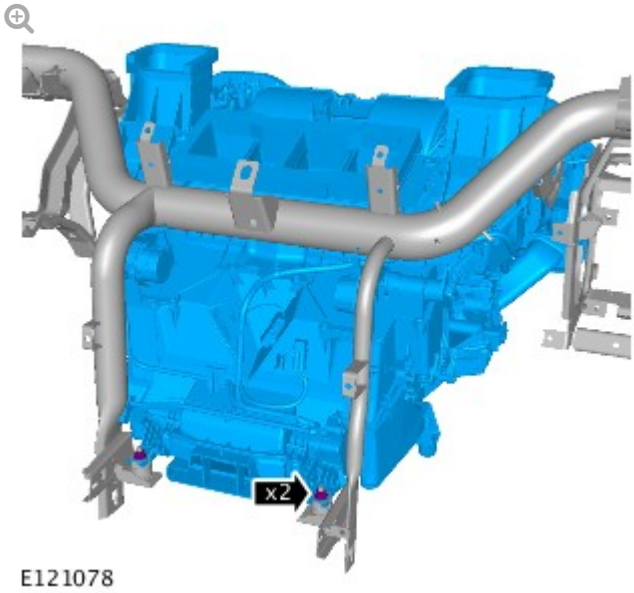

Torque: **8 Nm**

28. **NOTE:**

Do not disassemble further if the component is removed for access only.

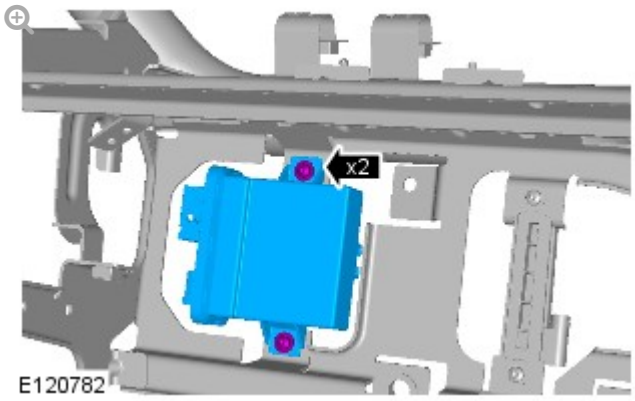

Torque: **6 Nm**

29.

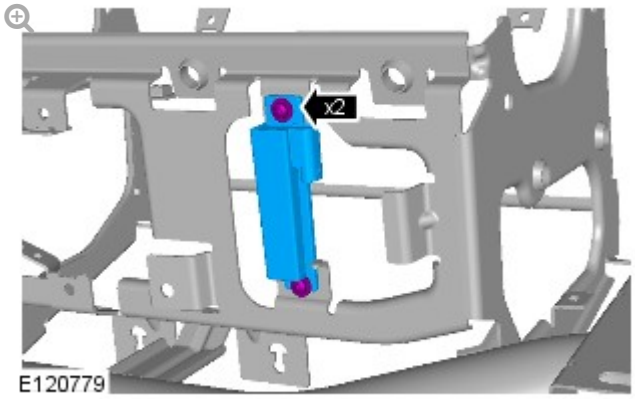

Torque: **6 Nm**

INSTALLATION

1. To install, reverse the removal procedure.

INSTRUMENT PANEL AND CONSOLE

INSTRUMENT PANEL CENTER REINFORCEMENT (G1236355)

REMOVAL AND INSTALLATION

REMOVAL

1. Remove the floor console.
   Refer to: Floor Console (501-12, Removal and Installation).

2. 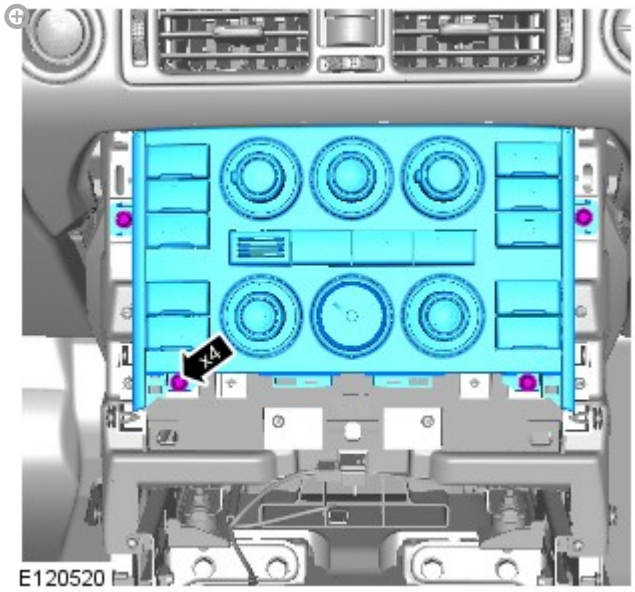

   Torque: **2 Nm**

3. 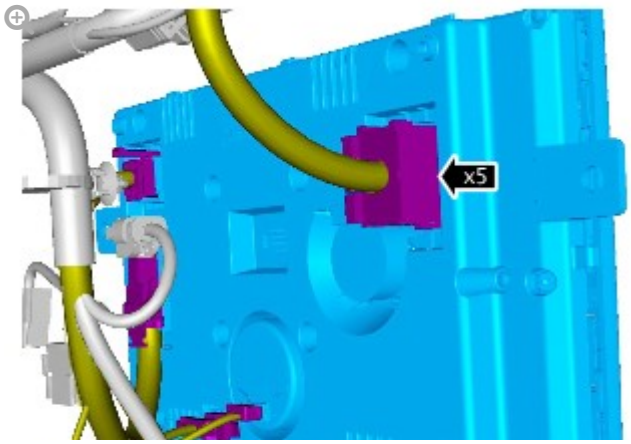

4.

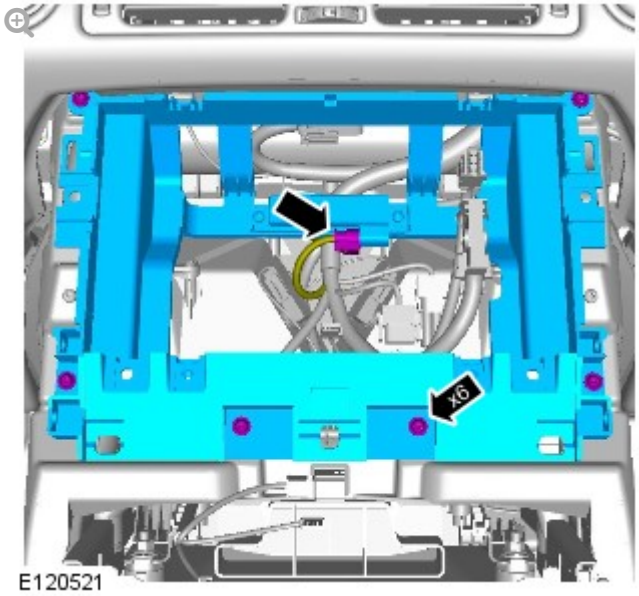

Torque: **3 Nm**

5.

NOTE:

Do not disassemble further if the component is removed for access only.

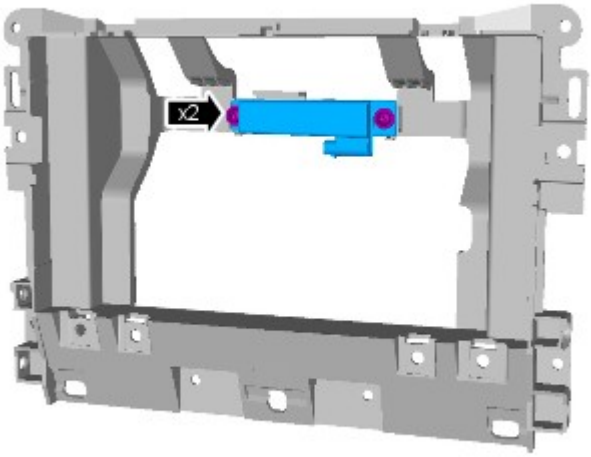

INSTALLATION

1. To install, reverse the removal procedure.

2012.0 RANGE ROVER (LM), 501-12

INSTRUMENT PANEL AND CONSOLE

INSTRUMENT PANEL LOWER SECTION (G899342)

REMOVAL AND INSTALLATION

76.46.05	PANEL – LOWER INSTRUMENT	ALL DERIVATIVES	2.3	USED WITHINS	+

REMOVAL

WARNINGS:

- Persons working on the supplemental restraint system (SRS) must be fully trained and have been issued with the safety guidelines.
- Allow a period of 10 minutes to elapse after disconnecting the battery before undertaking any work on the SRS.
- The SRS electrical connectors are unique. DO NOT force, or attempt to connect electrical connectors to the wrong sockets.
- The correct procedures must always be used when working on SRS components.
- It is imperative that before any work is undertaken on the SRS system, the appropriate information is read thoroughly.
- Always disconnect both battery cables before beginning work on the SRS system. Disconnect the ground cable first. Never reverse connect the battery.
- Take extra care when handling SRS components.

1. Make the air bag supplemental restraint system (SRS) safe.
   For additional information, refer to: Standard Workshop Practices (100-00, Description and Operation).

2. Disconnect the battery ground cable.
   For additional information, refer to: Specifications (414-00, Specifications).

3. Remove the instrument cluster.
   For additional information, refer to: Instrument Cluster (413-01, Removal and Installation).

4. **NOTE:**

LHD illustration shown, RHD is similar.

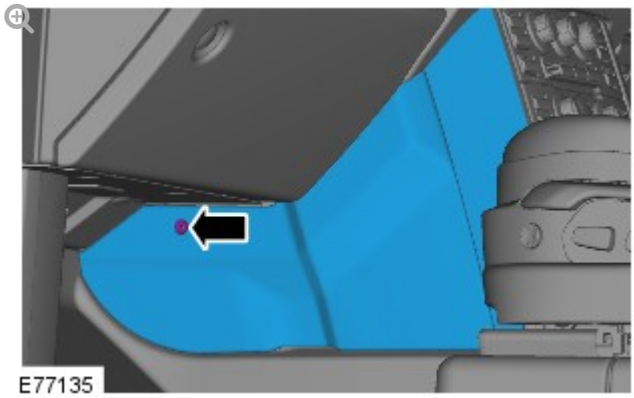

Remove the driver side floor console extension.

- Remove the screw.
- Release the 2 clips.

5.

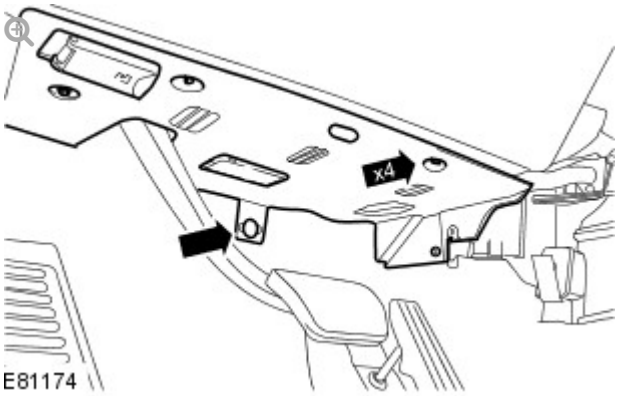

Release the driver side closing trim panel.

- Remove the 4 screws.
- Remove the clip.

6.

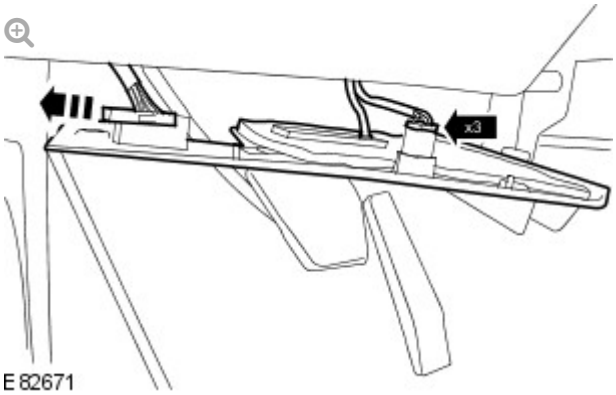

Remove the driver side closing trim panel.

- Disconnect the 2 electrical connectors.
- Release the vehicle diagnostic socket.

7.

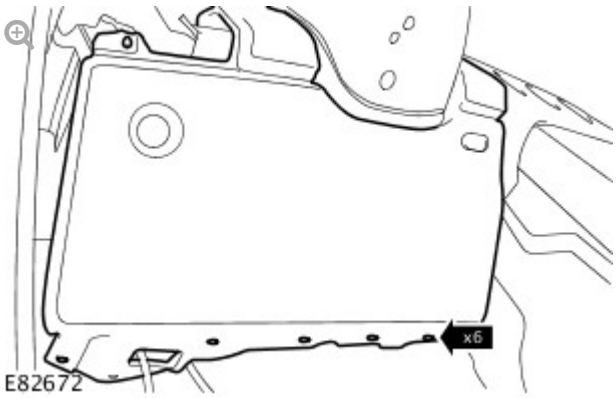

Remove the 6 lower screws from the instrument panel lower section.

8.

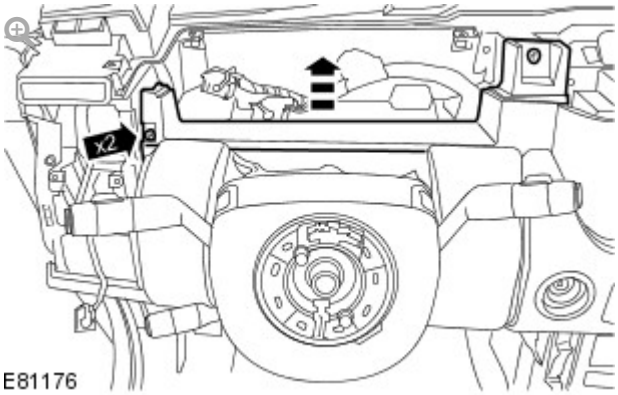

Remove the instrument cluster finish panel.

- Remove the 2 screws.

9.

Release the instrument panel lower section.

- Remove the 2 upper screws.

10.

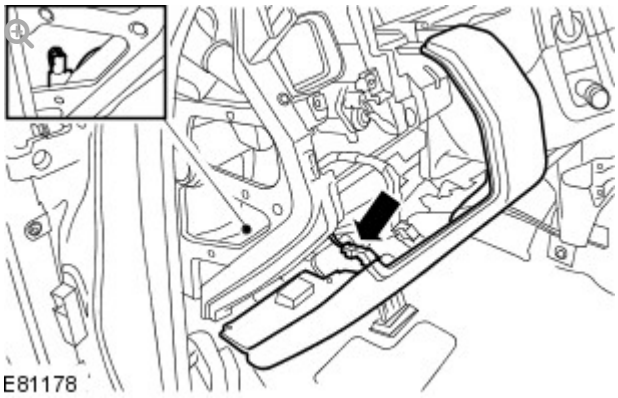

Remove the instrument panel lower section.

- Release the driver lower air bag module harness.
- Disconnect the driver lower air bag module electrical connector.
- Disconnect the footwell lamp electrical connector.

11.

NOTE:

Do not disassemble further if the component is removed for access only.

Remove the footwell lamp assembly.

- Release the 2 clips.

12.

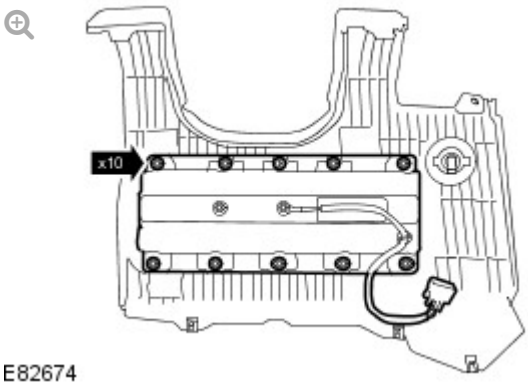

Remove the driver lower air bag module.

- Remove the 10 nuts.

INSTALLATION

1. Install the driver lower air bag module.
   - Tighten the nuts to 8 Nm (6 lb.ft).
2. Install the footwell lamp assembly.
   - Secure with the 2 clips.
3. Install the instrument panel lower section.
   - Connect the footwell lamp electrical connector.
   - Connect the driver lower air bag module electrical connector.
   - Secure the driver lower air bag module harness.
4. Secure the instrument panel lower section.
   - Install the 2 upper screws.
5. Install the instrument cluster finish panel.
   - Install the 2 screws.
6. Install the 6 lower screws to the instrument panel lower section.
7. Install the driver side closing trim panel.
   - Attach the vehicle diagnostic socket.
   - Connect the 2 electrical connectors.
8. Secure the driver side closing trim panel.
   - Install the 4 screws.
   - Install the clip.
9. Install the driver side floor console extension.

- Secure the 2 clips.
- Install the screw.

10. Install the instrument cluster.
    For additional information, refer to: Instrument Cluster (413-01, Removal and Installation).

11. Connect the battery ground cable.
    For additional information, refer to: Specifications (414-00, Specifications).

INSTRUMENT PANEL REINFORCEMENT (G1236450)

REMOVAL AND INSTALLATION

REMOVAL

WARNINGS:

- Persons working on the supplemental restraint system (SRS) must be fully trained and have been issued with the safety guidelines.
- Allow a period of 10 minutes to elapse after disconnecting the battery before undertaking any work on the SRS.
- The SRS electrical connectors are unique. DO NOT force, or attempt to connect electrical connectors to the wrong sockets.
- The correct procedures must always be used when working on SRS components.

- It is imperative that before any work is undertaken on the SRS system, the appropriate information is read thoroughly.
- Always disconnect both battery cables before beginning work on the SRS system. Disconnect the ground cable first. Never reverse connect the battery.
- Take extra care when handling SRS components.

1. Make the air bag supplemental restraint system (SRS) safe.
   Refer to: Standard Workshop Practices (100-00 General Information, Description and Operation).

2. Disconnect the battery ground cable.
   Refer to: Specifications (414-00 Battery and Charging System - General Information, Specifications).

3. Refer to: Clockspring (501-20B Supplemental Restraint System, Removal and Installation).

4. Refer to: Lower Center Registers Panel Assembly (501-12 Instrument Panel and Console, Removal and Installation).

5. 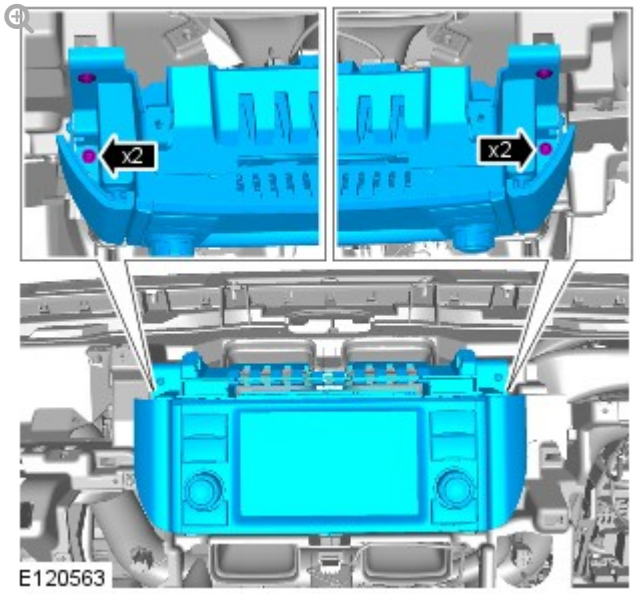

   Torque: **2 Nm**

6. 

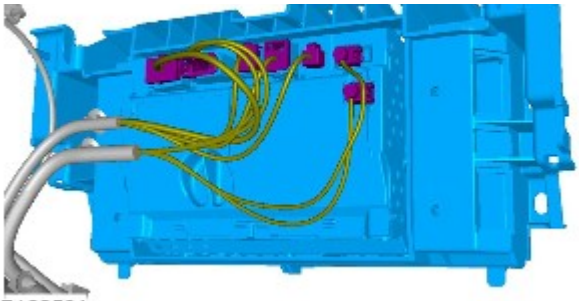

7.

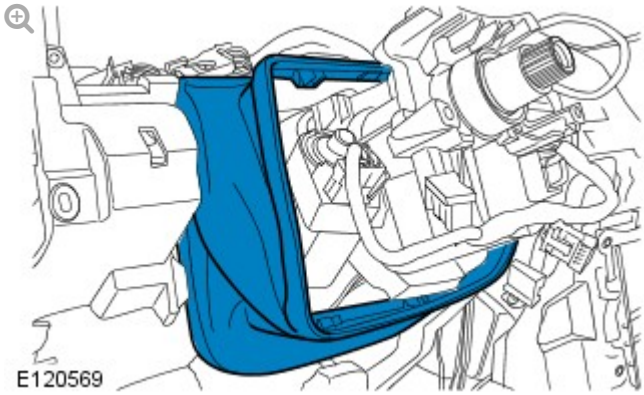

8.

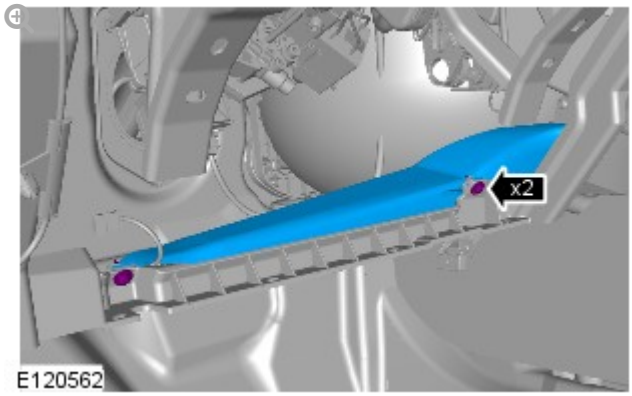

Torque: **3 Nm**

9.

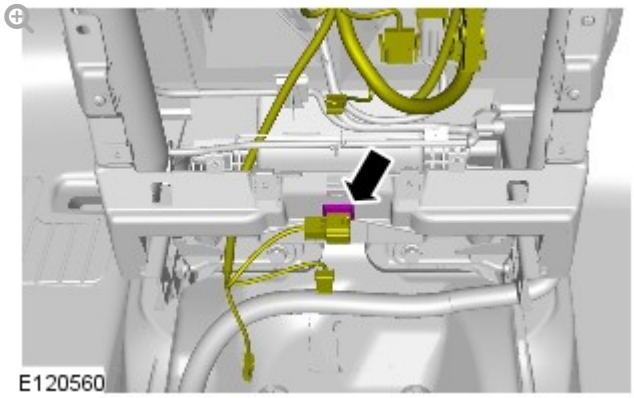

10.

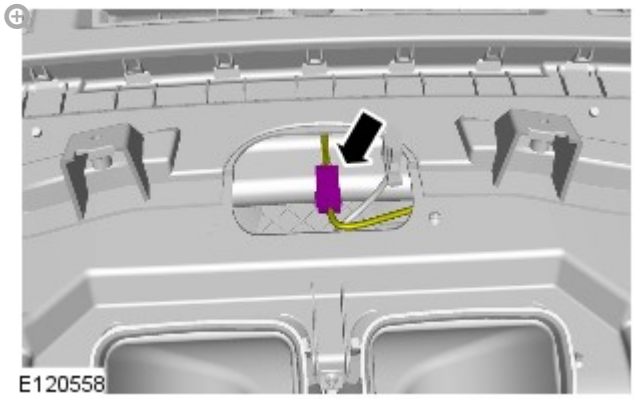

11.

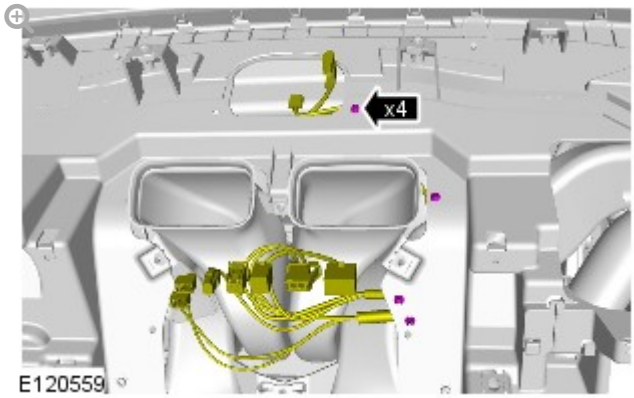

12.

NOTE:

Note the position of the wiring harnesses to aid installation.

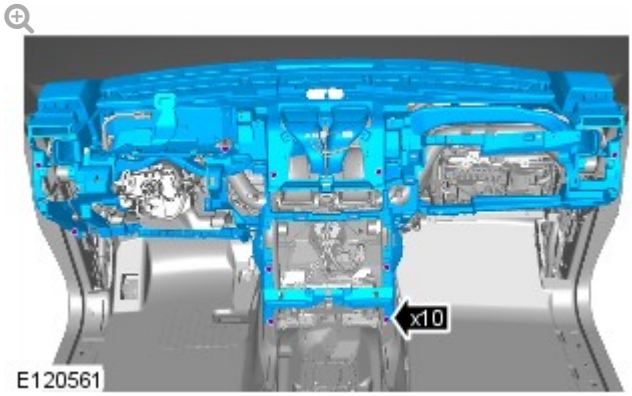

Torque: **3 Nm**

13.

NOTE:

Do not disassemble further if the component is removed for access only.

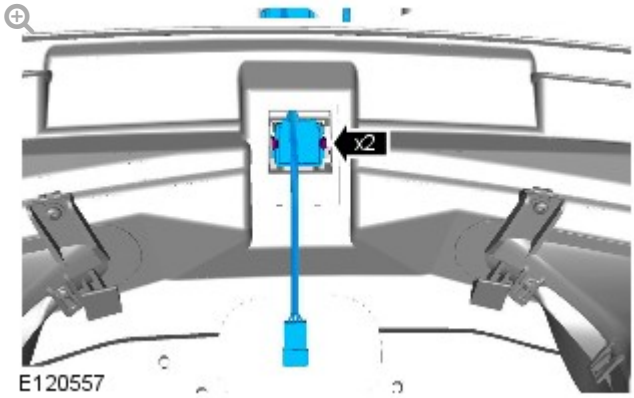

14.

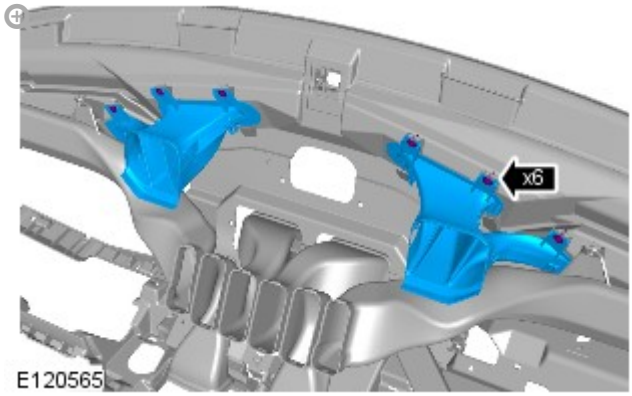

Torque: **3 Nm**

15.

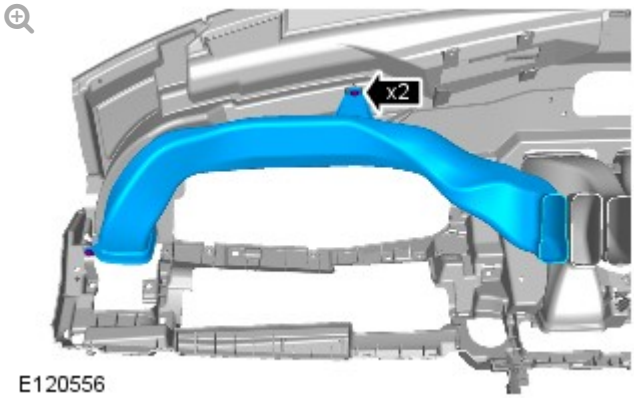

Torque: **3 Nm**

16.

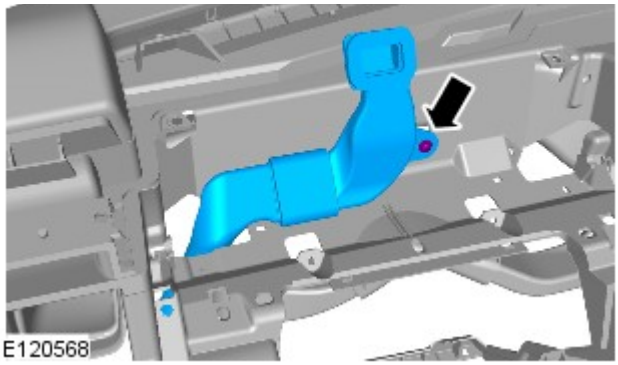

Torque: **3 Nm**

17.

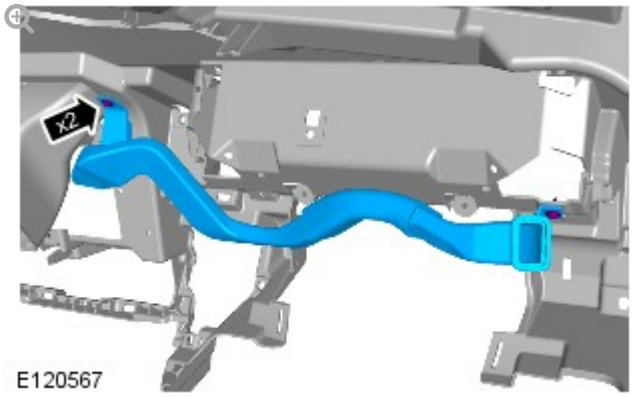

Torque: **3 Nm**

18.

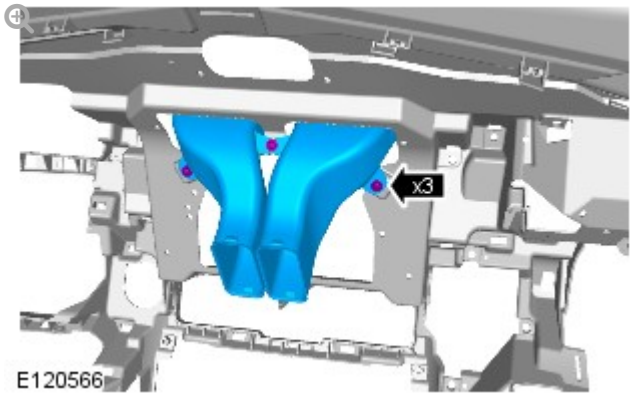

Torque: **3 Nm**

INSTALLATION

1. To install, reverse the removal procedure.

INSTRUMENT PANEL UPPER SECTION (G874152)

REMOVAL AND INSTALLATION

76.46.04	INSTRUMENT PANEL UPPER SECTION - COMPLETE - RENEW	ALL DERIVATIVES	1.7	USED WITHINS	+

REMOVAL

WARNINGS:

- The air bag is mounted directly under this component, extreme care is necessary.
- Persons working on the supplemental restraint system (SRS) must be fully trained and have been issued with the safety guidelines.
- Allow a period of 10 minutes to elapse after disconnecting the battery before undertaking any work on the SRS.
- The SRS electrical connectors are unique. DO NOT force, or attempt to connect electrical connectors to the wrong sockets.
- The correct procedures must always be used when working on SRS components.
- It is imperative that before any work is undertaken on the SRS system, the appropriate information is read thoroughly.
- Always disconnect both battery cables before beginning work on the SRS system. Disconnect the ground cable first. Never reverse connect the battery.

connect the battery.

- Take extra care when handling SRS components.

NOTE:

The passenger air bag is installed to the underside of the instrument panel upper section.

1. Make the air bag supplemental restraint system (SRS) safe.
   For additional information, refer to: Standard Workshop Practices (100-00, Description and Operation).

2. Disconnect the battery ground cable.
   For additional information, refer to: Specifications (414-00, Specifications).

3. Remove the upper glove compartment.
   For additional information, refer to: Upper Glove Compartment (501-12, Removal and Installation).

4. 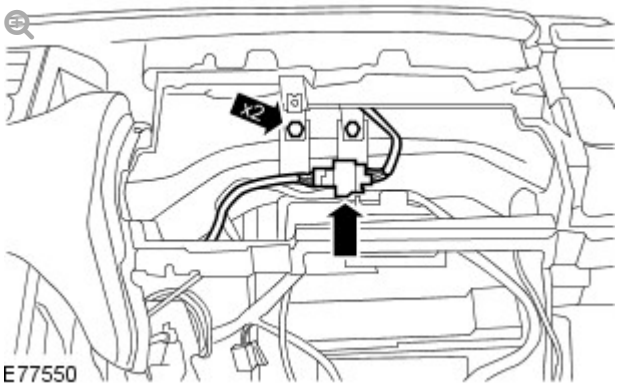

   Disconnect the passenger air bag module electrical connector.

   - Release the passenger air bag module harness.

5. Remove the 2 bolts securing the passenger air bag module to the in-vehicle crossbeam.

6. Remove the driver side register trim panel.

For additional information, refer to: Driver Side Register Trim Panel (412-01, Removal and Installation).

7. Remove the upper center registers.
For additional information, refer to: Upper Center Registers (412-01, Removal and Installation).

8. **CAUTION:**

Protect the surrounding trim to avoid damage.

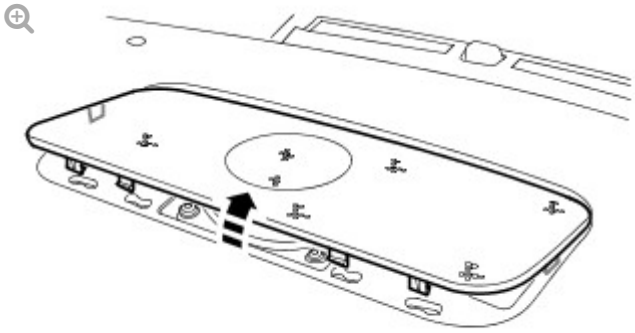

E66320

Remove the instrument panel center speaker grille.

9.

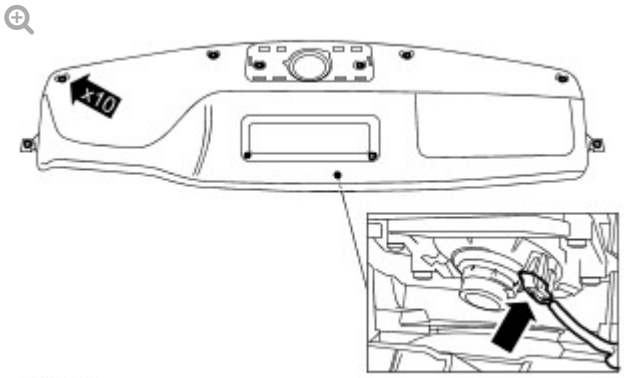

E77551

With assistance, remove the instrument panel upper section.

- Remove the 10 screws.
- Slide the instrument panel upper section away from the windshield and disconnect the instrument panel center speaker electrical connector.

10.

NOTE:

Do not disassemble further if the component is removed for access only.

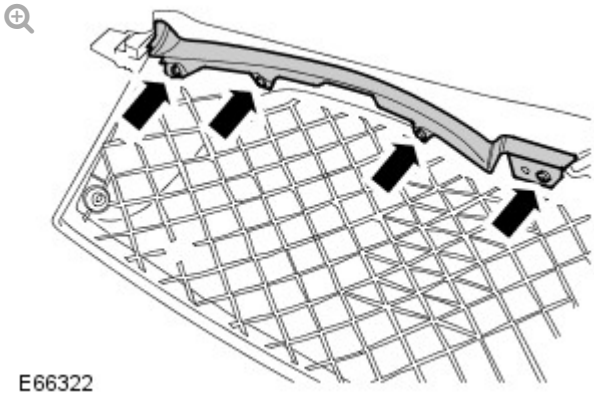

Remove the instrument cluster finish panel.

- Remove the 4 screws.

11.

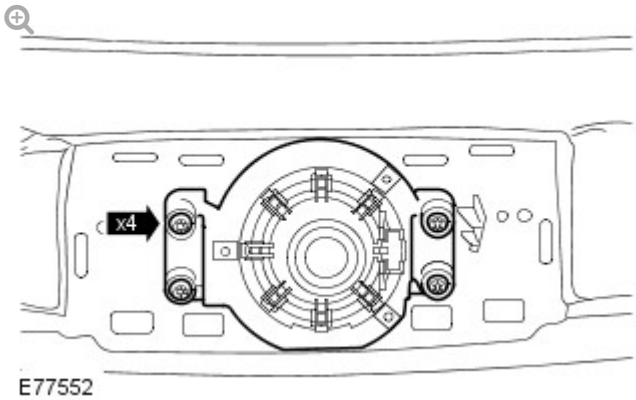

Remove the instrument panel center speaker.

- Remove the 4 screws.

12.

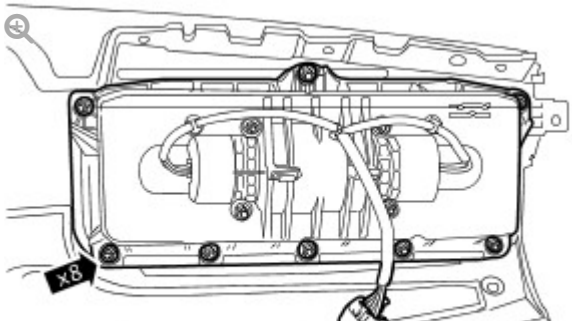

Remove the passenger air bag module.

- Remove the 8 nuts.

INSTALLATION

1. Install the passenger air bag module.
   - Tighten the nuts to 8 Nm (6 lb.ft).
2. Install the instrument panel center speaker.
   - Install the 4 screws.
3. Install the instrument cluster finish panel.
   - Install the 4 screws.
4. With assistance, install the instrument panel upper section.
   - Connect the instrument panel center speaker electrical connector.
   - Install the 10 screws.
5. Install the instrument panel center speaker grille.
6. Install the upper center registers.
   For additional information, refer to: Upper Center Registers (412-01, Removal and Installation).
7. Install the driver side register trim panel.
   For additional information, refer to: Driver Side Register Trim Panel (412-01, Removal and Installation).
8. Install the 2 bolts securing the passenger air bag module to the in-vehicle crossbeam.
9. Connect the passenger air bag module electrical connector.

9. Connect the passenger air bag module electrical connector.
   - Secure the passenger air bag module harness.

10. Install the upper glove compartment.
    For additional information, refer to: Upper Glove Compartment (501-12, Removal and Installation).

11. Connect the battery ground cable.
    For additional information, refer to: Specifications (414-00, Specifications).

2012.0 RANGE ROVER (LM), 501-12

INSTRUMENT PANEL AND CONSOLE

LOWER CENTER REGISTERS PANEL ASSEMBLY (G1236315)

REMOVAL AND INSTALLATION

REMOVAL

REMOVAL

WARNINGS:

- Persons working on the supplemental restraint system (SRS) must be fully trained and have been issued with the safety guidelines.
- Allow a period of 10 minutes to elapse after disconnecting the battery before undertaking any work on the SRS.
- The SRS electrical connectors are unique. DO NOT force, or attempt to connect electrical connectors to the wrong sockets.
- The correct procedures must always be used when working on SRS components.
- It is imperative that before any work is undertaken on the SRS system, the appropriate information is read thoroughly.
- Always disconnect both battery cables before beginning work on the SRS system. Disconnect the ground cable first. Never reverse connect the battery.
- Take extra care when handling SRS components.

1. Make the air bag supplemental restraint system (SRS) safe.
   Refer to: Standard Workshop Practices (100-00, Description and Operation).

2. Disconnect the battery ground cable.
   Refer to: Specifications (414-00, Specifications).

3. Refer to: Instrument Panel Lower Section (501-12, Removal and Installation).

4. 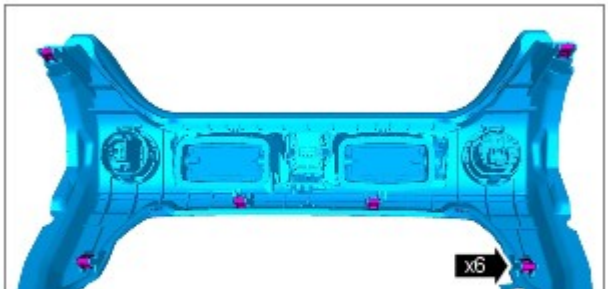

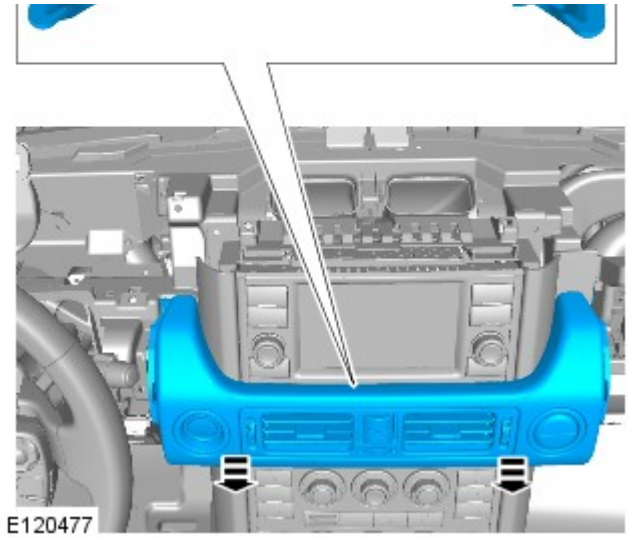

5.

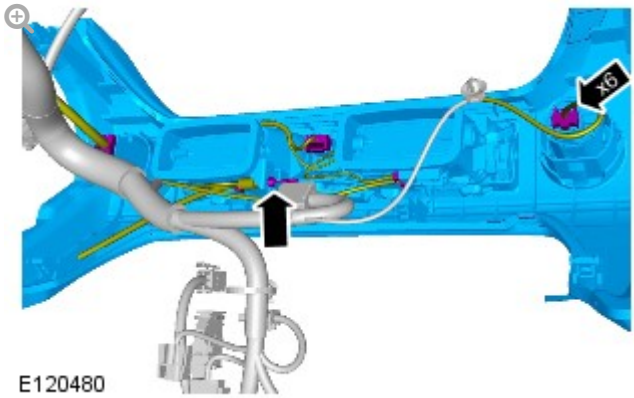

6.

NOTE:

Do not disassemble further if the component is removed for access only.

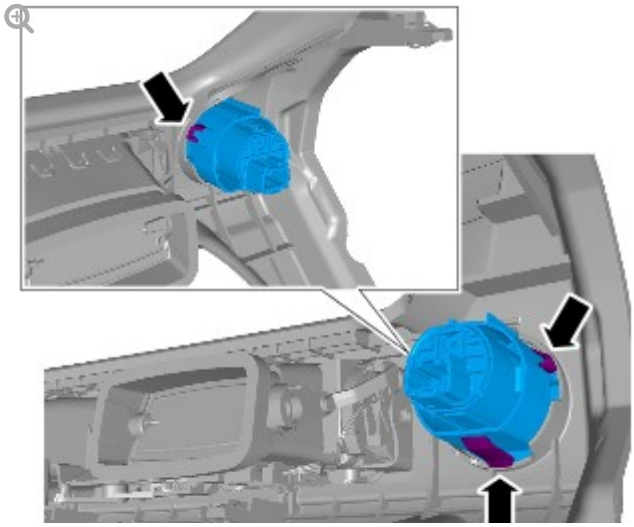

E120478

7.

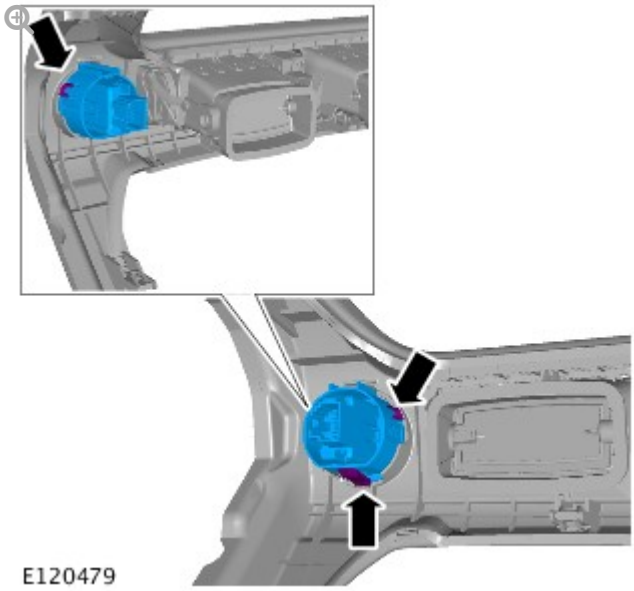

E120479

8.

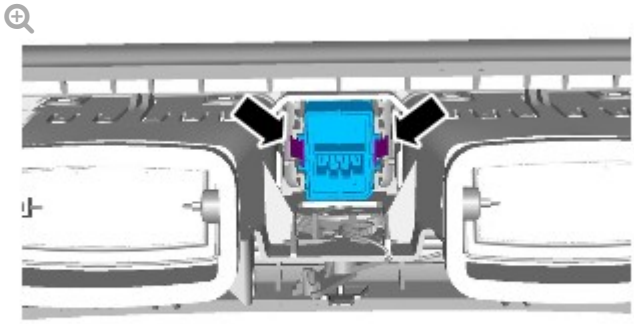

E120475

9.

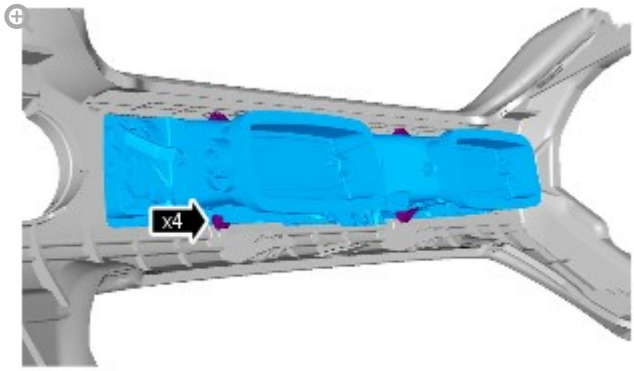

E120476

1. To install, reverse the removal procedure.

2012.0 RANGE ROVER (LM), 501-12

INSTRUMENT PANEL AND CONSOLE

LOWER GLOVE COMPARTMENT (G892740)

REMOVAL AND INSTALLATION

76.52.03	GLOVE COMPARTMENT – RENEW – INCLUDES ADJUSTMENT	ALL DERIVATIVES	0.8	USED WITHINS	+

REMOVAL

WARNINGS:

- Persons working on the supplemental restraint system (SRS) must be fully trained and have been issued with the safety guidelines.
- Allow a period of 10 minutes to elapse after disconnecting the

battery before undertaking any work on the SRS.

- The SRS electrical connectors are unique. DO NOT force, or attempt to connect electrical connectors to the wrong sockets.
- The correct procedures must always be used when working on SRS components.
- It is imperative that before any work is undertaken on the SRS system, the appropriate information is read thoroughly.
- Always disconnect both battery cables before beginning work on the SRS system. Disconnect the ground cable first. Never reverse connect the battery.
- Take extra care when handling SRS components.

1. Make the air bag supplemental restraint system (SRS) safe.
   For additional information, refer to: Standard Workshop Practices (100-00, Description and Operation).

2. Open the lower glove compartment.

3. Disconnect the battery ground cable.
   For additional information, refer to: Specifications (414-00, Specifications).

4. Remove the cowl side trim panel.
   For additional information, refer to: Cowl Side Trim Panel (501-05, Removal and Installation).

5. Remove the floor console extension trim panel.
   For additional information, refer to: Floor Console Extension (501-12, Removal and Installation).

6. 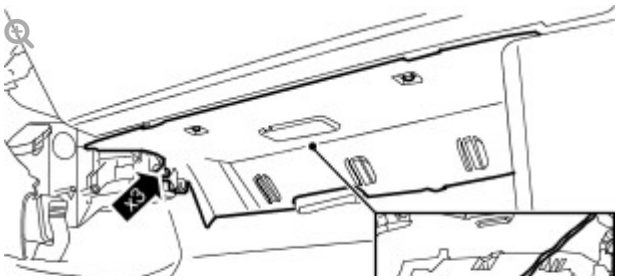

Remove the passenger side closing trim panel.

- Remove the 3 screws.
- Disconnect the footwell lamp electrical connector.

7. Remove the passenger side register trim panel.
For additional information, refer to: Passenger Side Register Trim Panel (412-01, Removal and Installation).

8.

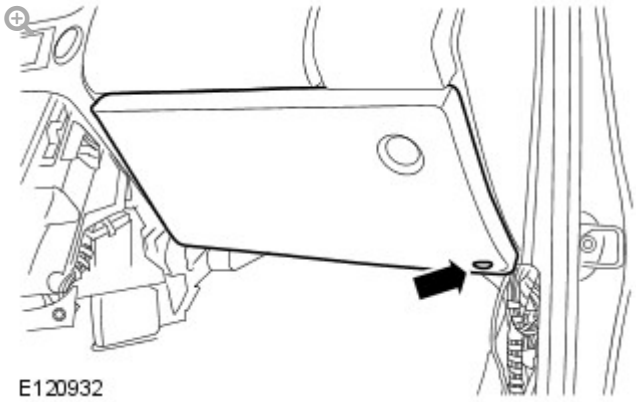

Release the lower glove compartment.

- Remove the retaining screw.

9.

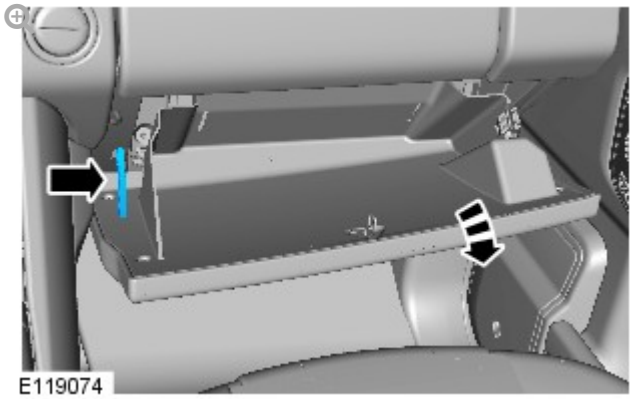

Open the lower glove compartment to the service position.

10.

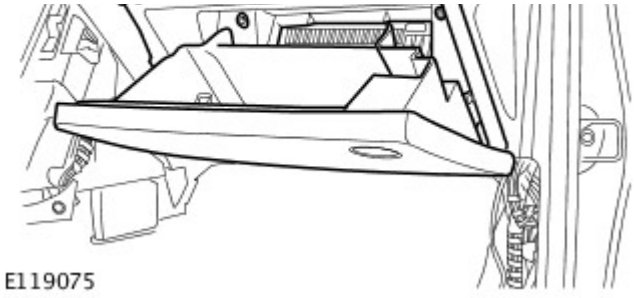

Remove the 8 screws from the lower glove compartment.

11.

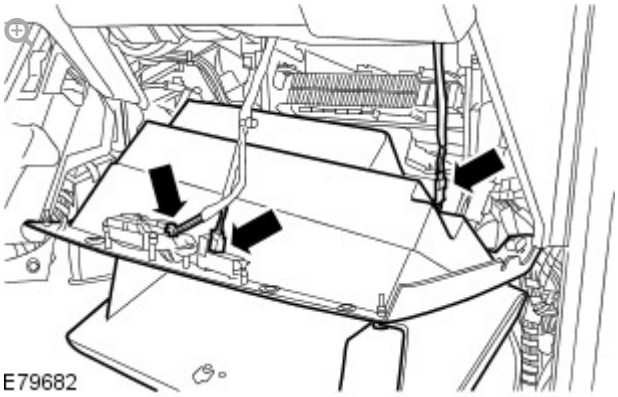

Remove the lower glove compartment.

- Disconnect the electrical connector from the footwell lamp.
- Disconnect the electrical connector from the lower glove compartment lamp.
- Disconnect the electrical connector from the lower glove compartment latch.

12.

NOTE:

Do not disassemble further if the component is removed for access only.

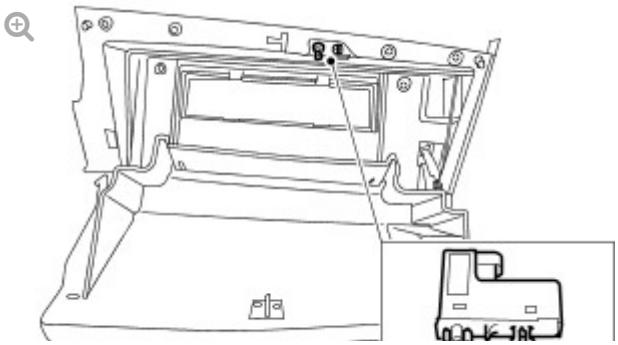

E79683

Remove the lower glove compartment lamp.

13.

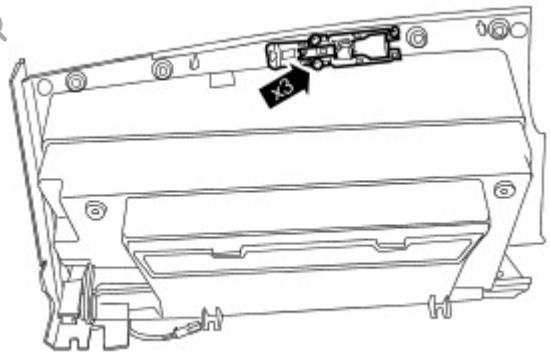

E79684

Remove the lower glove compartment latch.

- Remove the 3 screws.

14.

E120923

Remove the lower glove compartment lid.

INSTALLATION

1. Install the lower glove compartment lid.
   - Position the lower glove compartment striker.
   - Install the 6 screws to the lower glove compartment lid .
2. Install the lower glove compartment latch.
   - Install the 3 screws.

3. Install the lower glove compartment lamp.

4. Install the lower glove compartment.
   - Connect the lower glove compartment latch electrical connector.
   - Connect the lower glove compartment lamp electrical connector.
   - Connect the footwell lamp electrical connector.
   - Align the lower glove compartment.

5. Secure the lower glove compartment.
   - Install the 8 screws.

6. Close the lower glove compartment.

7. Attach the lower glove compartment.
   - Install the retaining screw.

8. Install the passenger side register trim panel.
   For additional information, refer to: Passenger Side Register Trim Panel (412-01, Removal and Installation).

9. Install the passenger side closing trim panel.
   - Connect the footwell lamp electrical connector.
   - Install the 3 screws.

10. Install the floor console extension trim panel.
    For additional information, refer to: Floor Console Extension (501-12, Removal and Installation).

11. Install the cowl side trim panel.
    For additional information, refer to: Cowl Side Trim Panel (501-05, Removal and Installation).

12. Connect the battery ground cable.

For additional information, refer to: Specifications (414-00, Specifications).

INSTRUMENT PANEL AND CONSOLE

LOWER GLOVE COMPARTMENT LID (G892741)

REMOVAL AND INSTALLATION

REMOVAL

1. Open the lower glove compartment.

2. 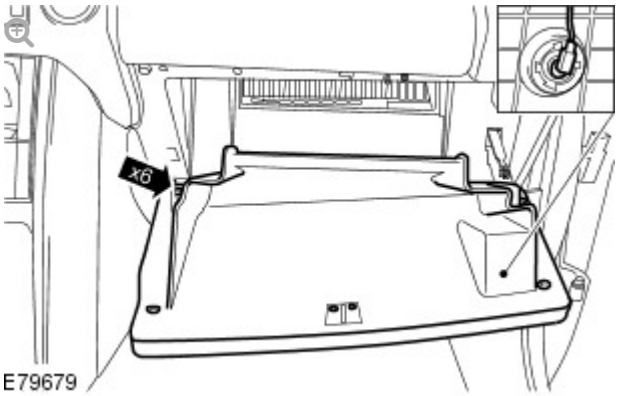

Remove the lower glove compartment lid.

- Remove the 6 screws from the lower glove compartment lid.
- Collect the lower glove compartment striker.
- Disconnect the footwell lamp electrical connector.

3. **NOTE:**

Do not disassemble further if the component is removed for access only.

Remove the footwell lamp assembly.

- Release the 2 clips.

INSTALLATION

1. Install the footwell lamp assembly.

2. Install the lower glove compartment lid.
   - Connect the footwell lamp electrical connector.
   - Position the lower glove compartment striker.
   - Install the 6 screws.

3. Close the lower glove compartment.

2012.0 RANGE ROVER (LM), 501-12

INSTRUMENT PANEL AND CONSOLE

OVERHEAD CONSOLE (G552917)

REMOVAL AND INSTALLATION

CONSOLE –

76.25.02	CONSOLE HEADLINER - FRONT - RENEW	ALL DERIVATIVES	0.2	USED WITHINS	+

REMOVAL

1.

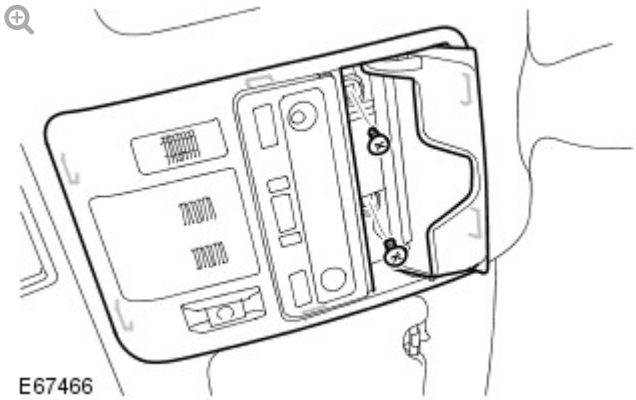

Release the overhead console.

- Open the sunglasses compartment.
- Remove the 2 screws.
- Release the 6 clips.

2.

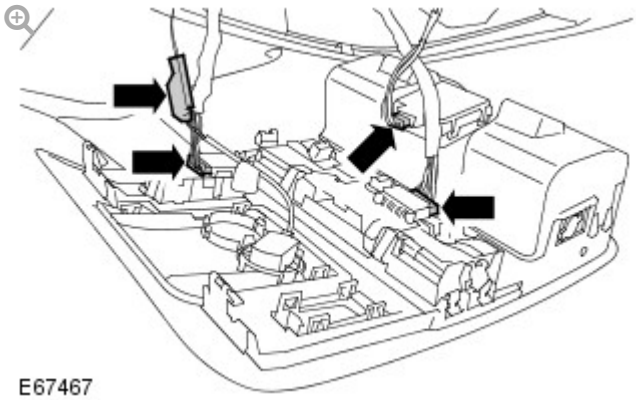

Remove the overhead console.

- Disconnect the 4 electrical connectors.

3.

NOTE:

Do not disassemble further if the component is removed for access only.

access only.

Remove the front interior lamp.

- Release the 2 clips.

4.

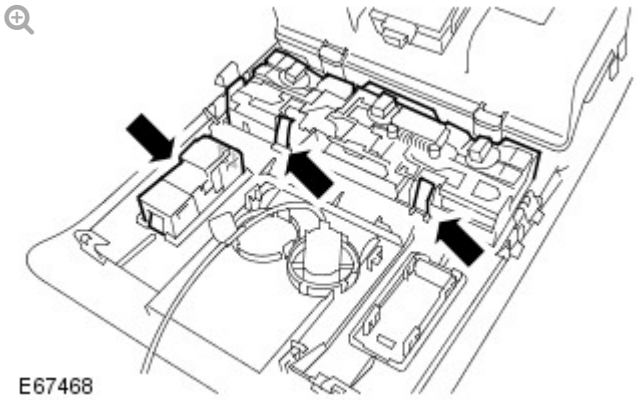

Remove the roof opening panel switch.

- Carefully release the 2 clips.

5. Remove the overhead console blanking trim.

- Release the 4 clips.

6. Release the tire pressure monitoring system receiver.

7. Remove the cellular phone microphone.

- Release the 3 clips.

8.

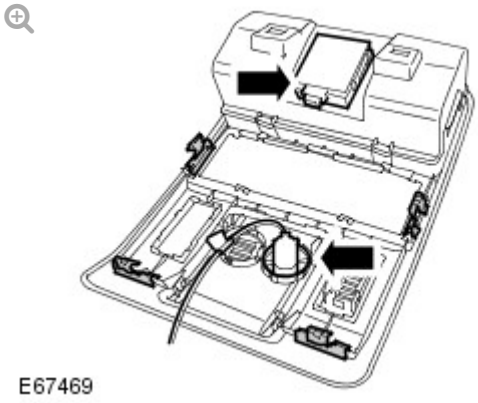

Remove the 4 clips from the overhead console.

1. Install the 4 clips to the overhead console.

2. Install the cellular phone microphone.
   - Secure the 3 clips.

3. Secure the tire pressure monitoring system receiver.

4. Install the overhead console blanking trim.
   - Secure the 4 clips.

5. Install the roof opening panel switch.
   - Secure in the 2 clips.

6. Install the front interior lamp.
   - Secure the 2 clips.

7. Install the overhead console.
   - Connect the 4 electrical connectors.

8. Secure the overhead console.
   - Secure the 6 clips.
   - Install the 2 screws.
   - Close the sunglasses compartment.

2012.0 RANGE ROVER (LM), 501-12

INSTRUMENT PANEL AND CONSOLE

UPPER GLOVE COMPARTMENT (G892742)

REMOVAL AND INSTALLATION

76.25.02	CONSOLE - HEADLINER - FRONT - RENEW	ALL DERIVATIVES	0.2	USED WITHINS	+

REMOVAL

WARNINGS:

- Persons working on the supplemental restraint system (SRS) must be fully trained and have been issued with the safety guidelines.

- Allow a period of 10 minutes to elapse after disconnecting the battery before undertaking any work on the SRS.
- The SRS electrical connectors are unique. DO NOT force, or attempt to connect electrical connectors to the wrong sockets.
- The correct procedures must always be used when working on SRS components.
- It is imperative that before any work is undertaken on the SRS system, the appropriate information is read thoroughly.
- Always disconnect both battery cables before beginning work on the SRS system. Disconnect the ground cable first. Never reverse connect the battery.
- Take extra care when handling SRS components.

1. Make the air bag supplemental restraint system (SRS) safe.
   For additional information, refer to: Standard Workshop Practices (100-00, Description and Operation).

2. Disconnect the battery ground cable.
   For additional information, refer to: Specifications (414-00, Specifications).

3. Remove the lower glove compartment.
   For additional information, refer to: Lower Glove Compartment (501-12, Removal and Installation).

4. 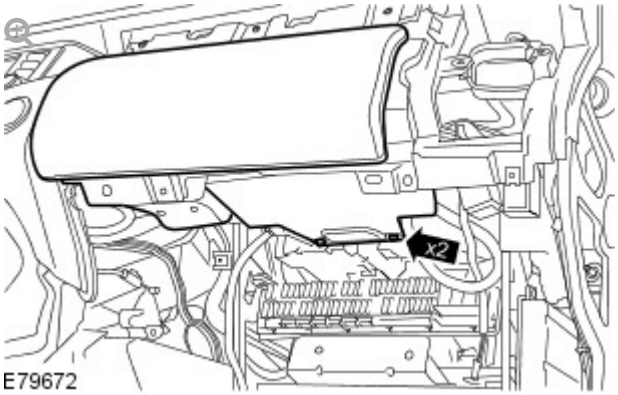

   Remove the 2 screws from the compact disc (CD) changer bracket.

5. Open the upper glove compartment.

6.

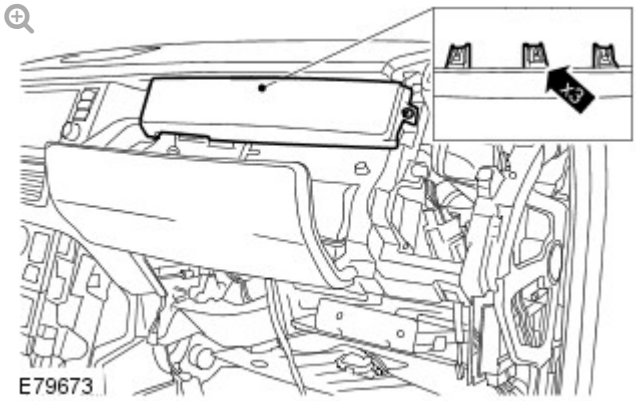

Remove the upper glove compartment finisher trim panel.

- Remove the screw.
- Release the 3 clips.

7.

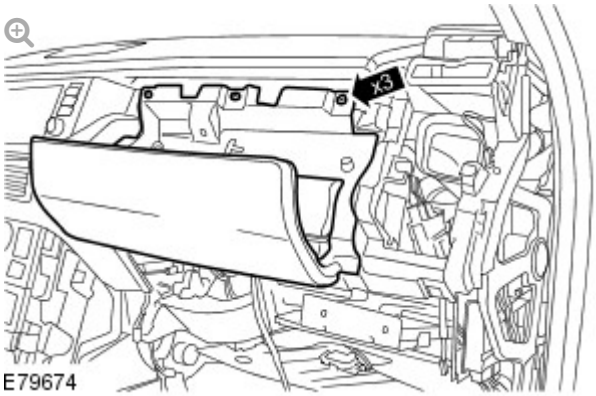

Remove the 3 screws from the upper glove compartment.

8.

CAUTION:

Care must be taken to avoid damaging the upper glove compartment release mechanism.

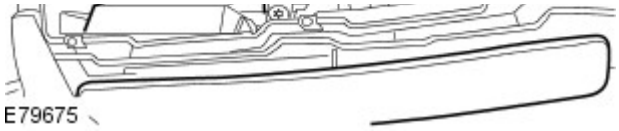

Remove the upper glove compartment.

- Disconnect the upper glove compartment latch electrical connector.
- If installed, disconnect the electrical connector from the portable camera docking station.
- Disconnect the coaxial cable from the portable camera docking station.
- Disconnect the CD changer electrical connector.

9.

NOTE:

Do not disassemble further if the component is removed for access only.

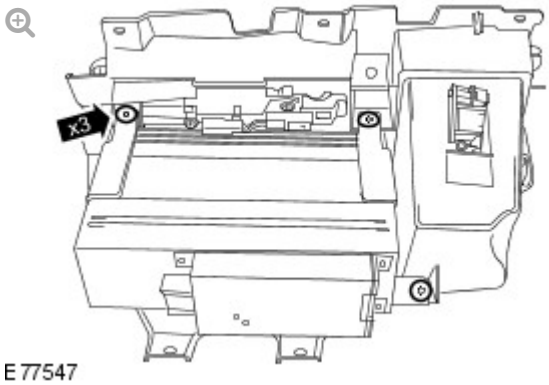

Remove the CD changer.

- Remove the 3 screws securing the CD changer bracket to the upper glove compartment.

10.

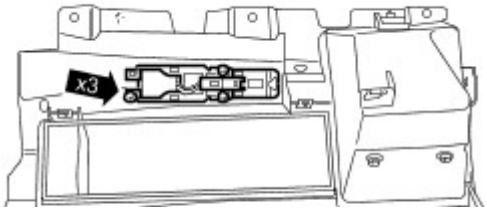

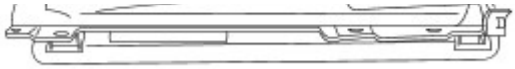

E79676

Remove the upper glove compartment latch.

- Remove the 3 screws.

11.

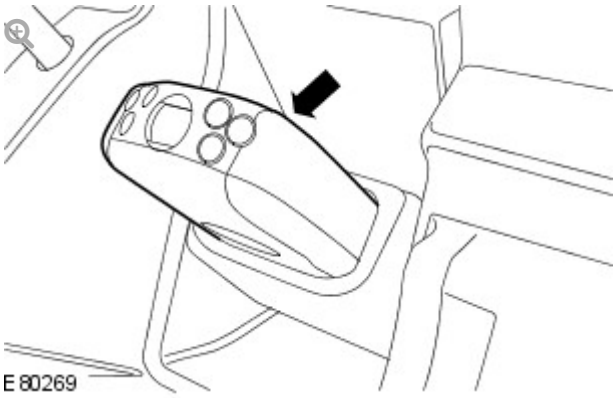

E80269

Release and remove the portable camera from the portable camera docking station.

12.

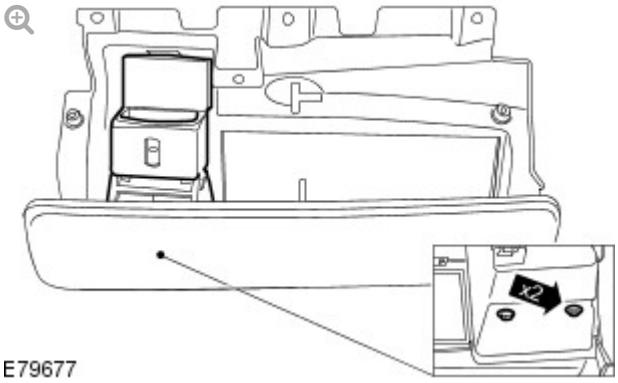

E79677

Remove the portable camera docking station.

- Remove the 2 screws.

13.

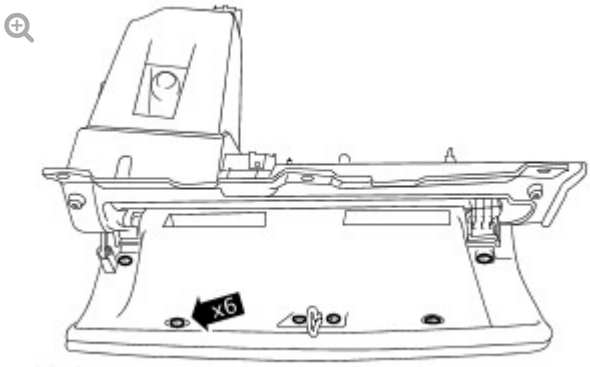

E79678

Remove the upper glove compartment lid.

- Remove the 6 screws from the upper glove compartment lid.
- Collect the upper glove compartment striker.

INSTALLATION

1. Install the upper glove compartment lid.
   - Position the upper glove compartment striker.
   - Install the 6 screws to the upper glove compartment lid.
2. Install the portable camera docking station.
   - Install the 2 screws.
3. Install the portable camera to the portable camera docking station.
4. Install the upper glove compartment latch.
   - Install the 3 screws.
5. Install the CD changer.
   - Install the 3 screws securing the CD changer bracket to the upper glove compartment.
6. **CAUTION:**

   Care must be taken to avoid damaging the upper glove compartment release mechanism.

   Install the upper glove compartment.
   - Connect the CD changer electrical connector.
   - Connect the portable camera docking station coaxial cable.
   - Connect the portable camera docking station electrical connector.

connector.

- Connect the upper glove compartment latch electrical connector.

7. Install the 3 screws to the upper glove compartment.

8. Install the upper glove compartment finisher trim panel.
   - Secure the 3 clips.
   - Install the screw.

9. Close the upper glove compartment.

10. Install the 2 screws to the CD changer bracket.

11. Install the lower glove compartment.
    For additional information, refer to: Lower Glove Compartment (501-12, Removal and Installation).

12. Connect the battery ground cable.
    For additional information, refer to: Specifications (414-00, Specifications).

INSTRUMENT PANEL AND CONSOLE

UPPER GLOVE COMPARTMENT LID (G892743)

REMOVAL AND INSTALLATION

REMOVAL

1. Open the upper glove compartment.

2. 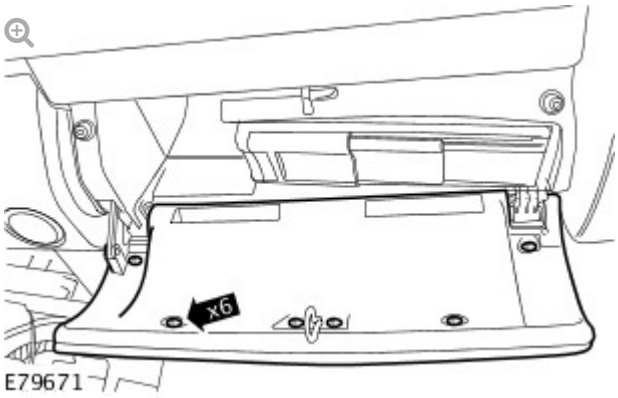

   Remove the upper glove compartment lid.

   - Remove the 6 screws from the upper glove compartment lid.
   - Collect the upper glove compartment striker.

INSTALLATION

1. Install the upper glove compartment lid.

- Position the upper glove compartment striker.
- Install the 6 screws.

2. Close the upper glove compartment.

2012.0 RANGE ROVER (LM), 501-12

INSTRUMENT PANEL AND CONSOLE

REAR SEAT CENTER CONSOLE – ULTIMATE (G1393710)

REMOVAL

NOTES:

- Removal steps in this procedure may contain installation details.
- Some variation in the illustrations may occur, but the essential information is always correct.

1. **NOTE:**

   RH side only.

   Refer to: Rear Seat - Vehicles With: Rear Business Seats (501-10, Removal and Installation).

2. 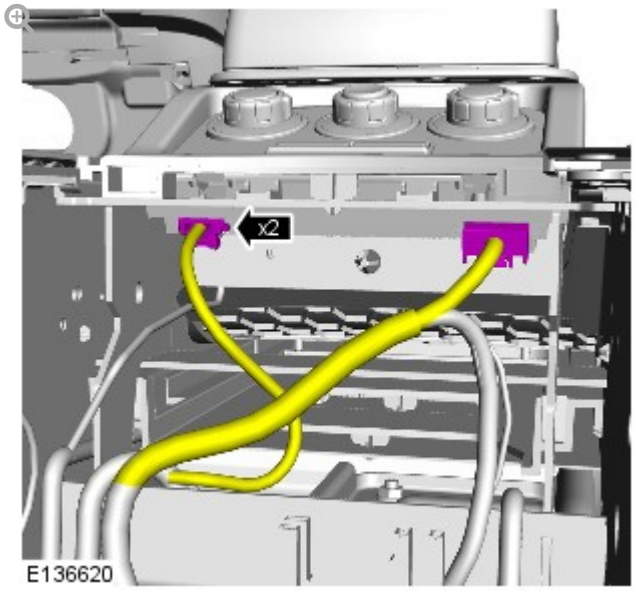

3. 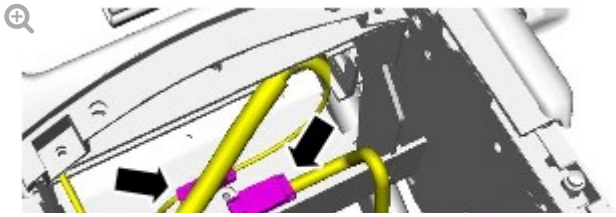

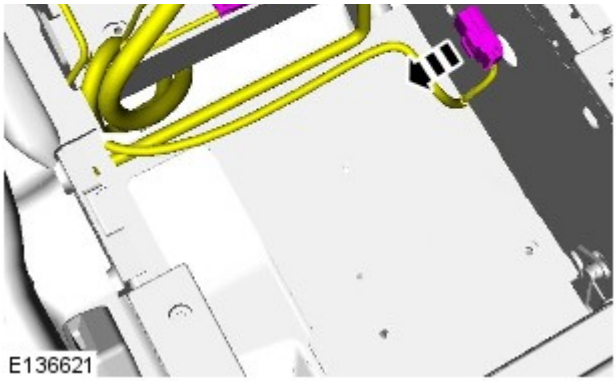

- Carefully feed the wiring harness under the seat base.

4. **NOTE:**

RH illustration shown, LH is similar.

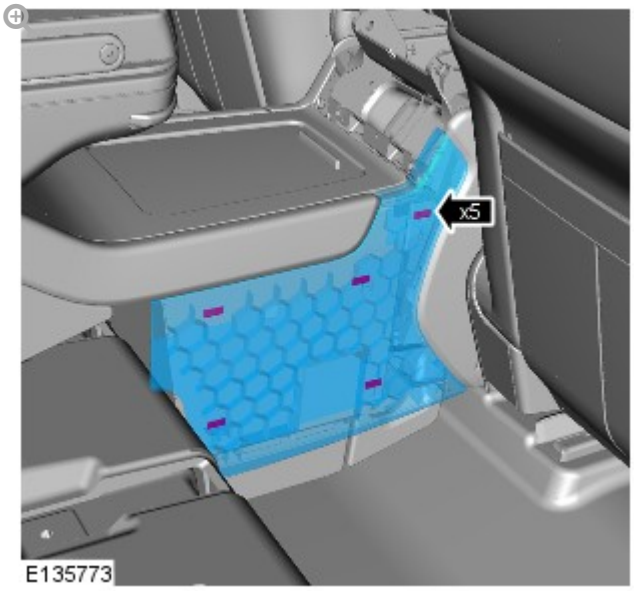

5. **NOTE:**

RH illustration shown, LH is similar.

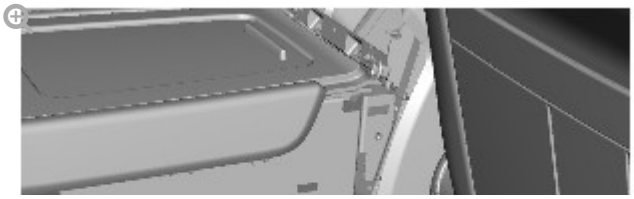

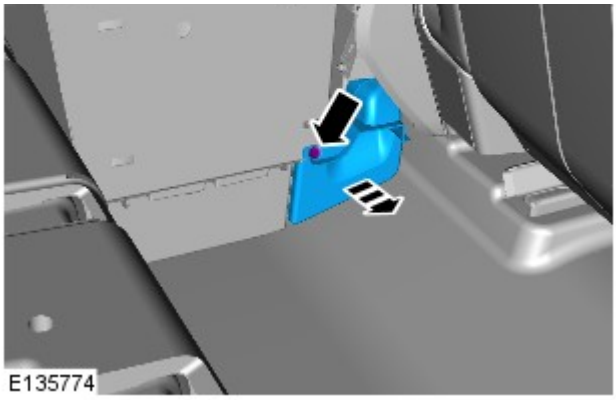

6.

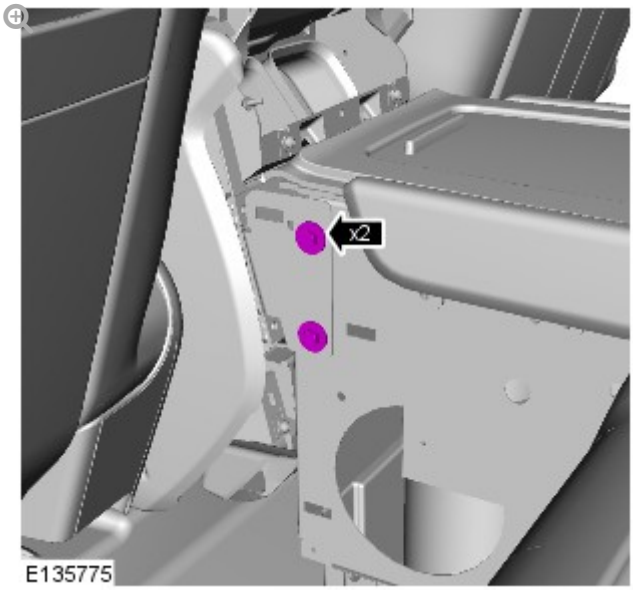

- *Torque:* **9 Nm**

7.

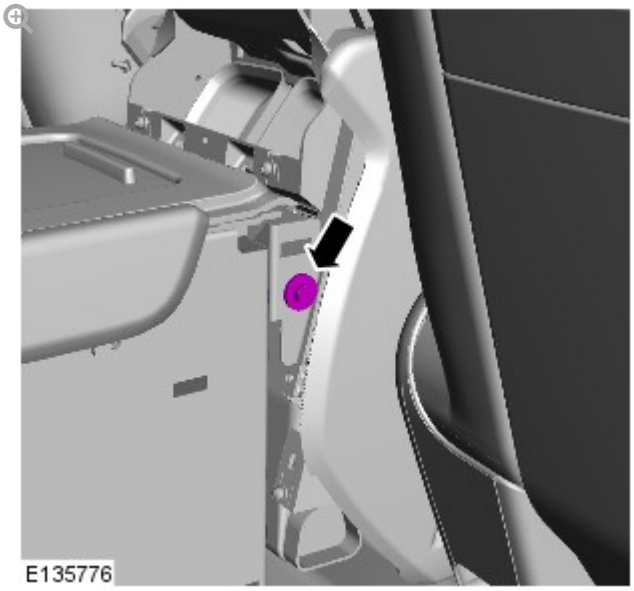

- *Torque:* **9 Nm**

8.

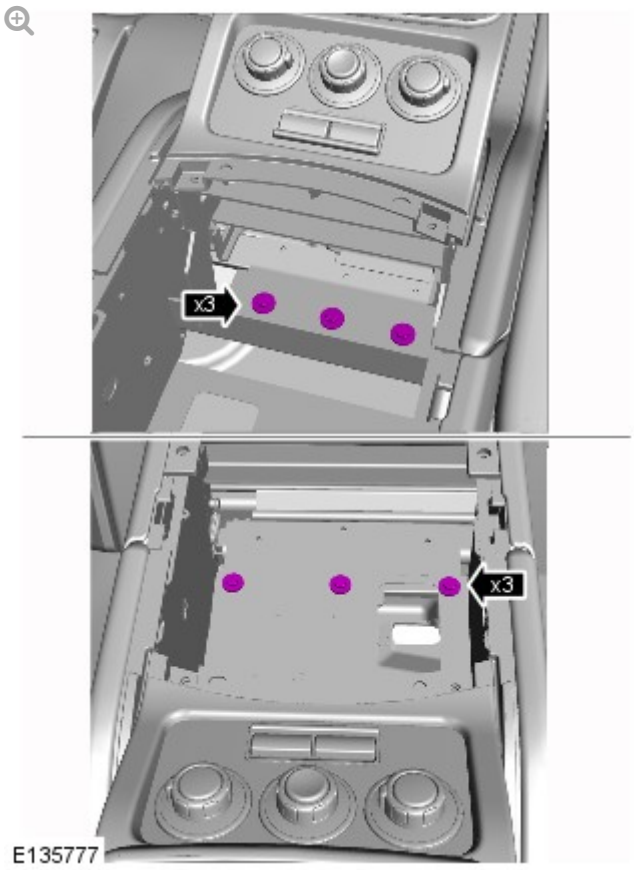

- *Torque:* **9 Nm**

9.

CAUTIONS:

- Protect the surrounding trim to avoid damage.
- Take extra care not to damage the wiring harnesses.

INSTALLATION

1. To install, reverse the removal procedure.

INSTRUMENT PANEL AND CONSOLE

REAR SEAT CENTER CONSOLE TABLE – ULTIMATE

(G1393711)

REMOVAL AND INSTALLATION

REMOVAL

NOTES:

- Removal steps in this procedure may contain installation details.
- Some variation in the illustrations may occur, but the essential information is always correct.

1.

2.

3.

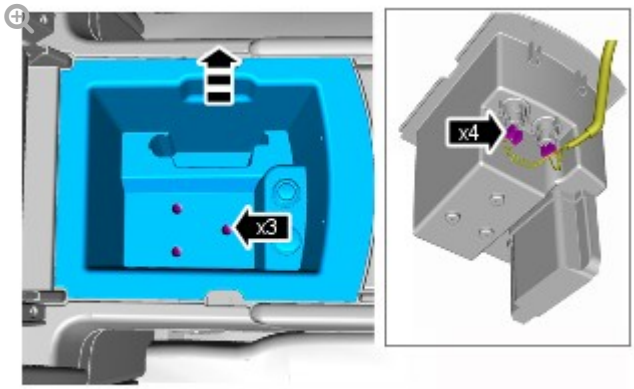

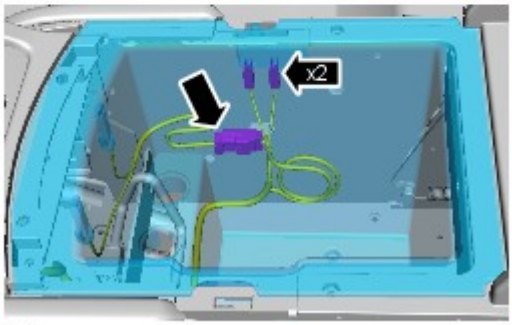

E135772

- *Torque:* **1.5 Nm**

4.

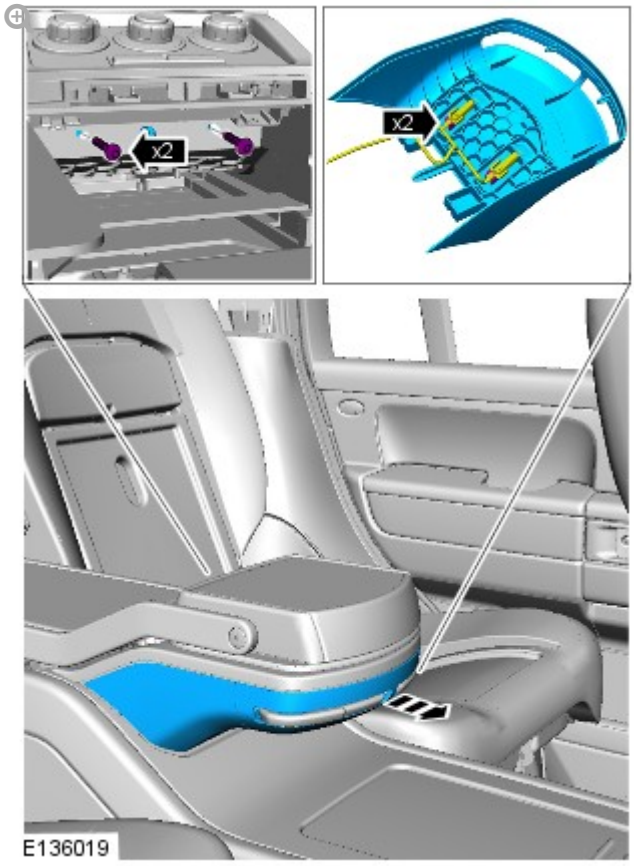

E136019

5.

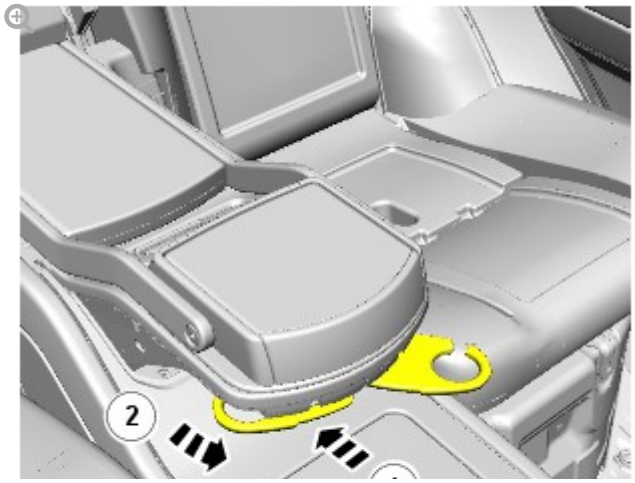

6.

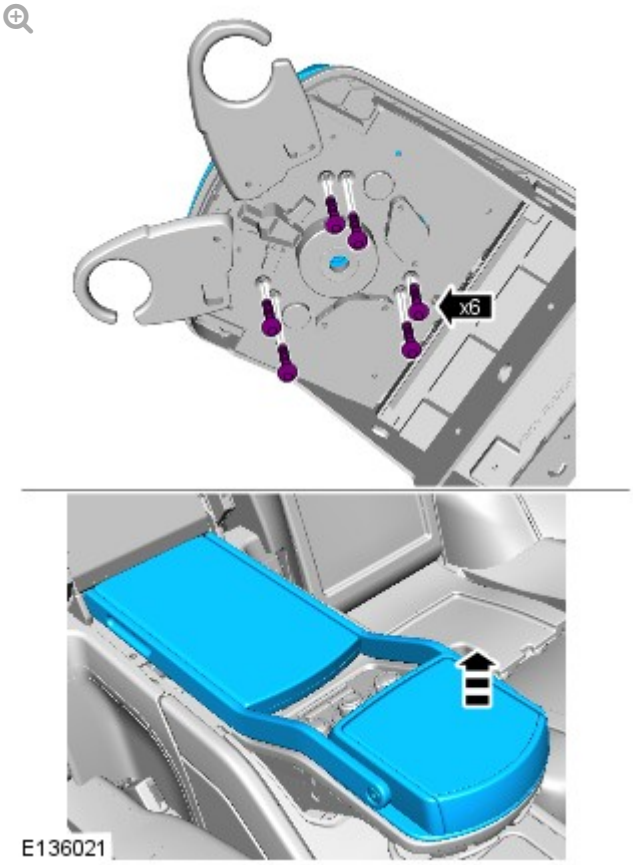

- *Torque:* **9 Nm**

7.

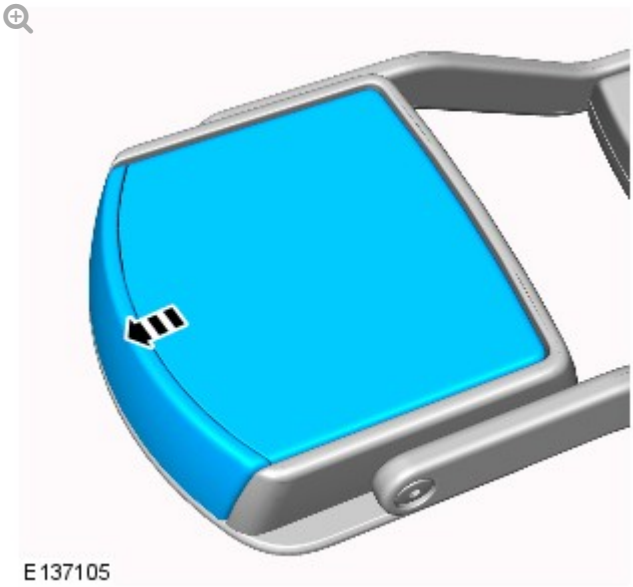

8.

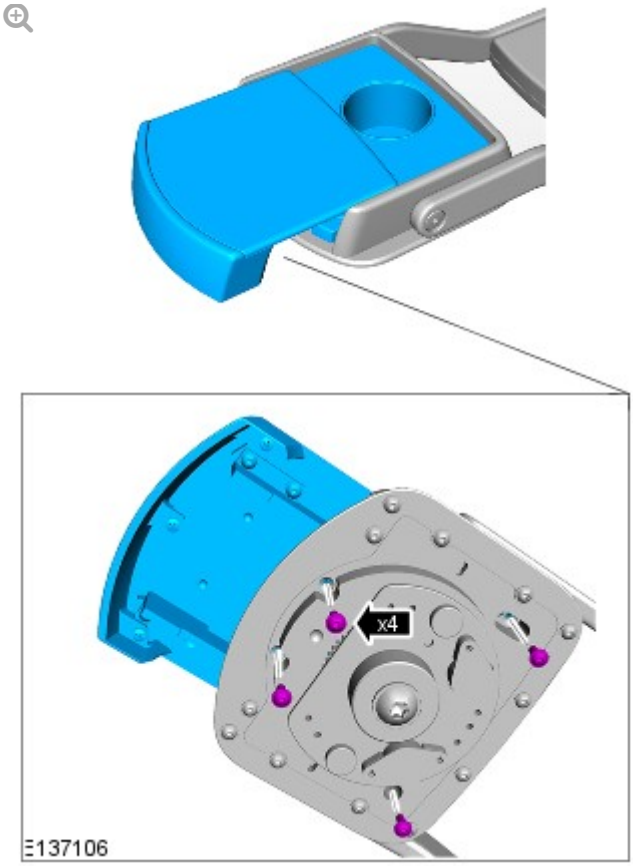

9.

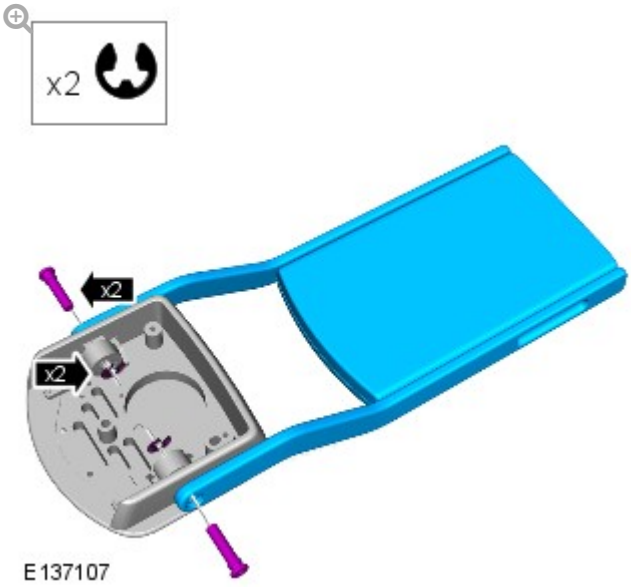

- *Torque:* **2 Nm**

INSTALLATION

1. To install, reverse the removal procedure.

INSTRUMENT PANEL AND CONSOLE

ROTATING TRAY AND CUPHOLDER ASSEMBLY – ULTIMATE (G1429301)

REMOVAL AND INSTALLATION

REMOVAL

NOTES:

- Removal steps in this procedure may contain installation details.
- Some variation in the illustrations may occur, but the essential information is always correct.

1.

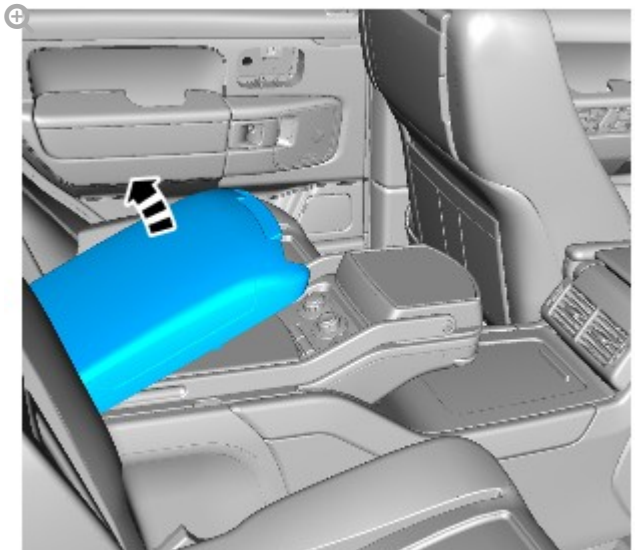

2.

3.

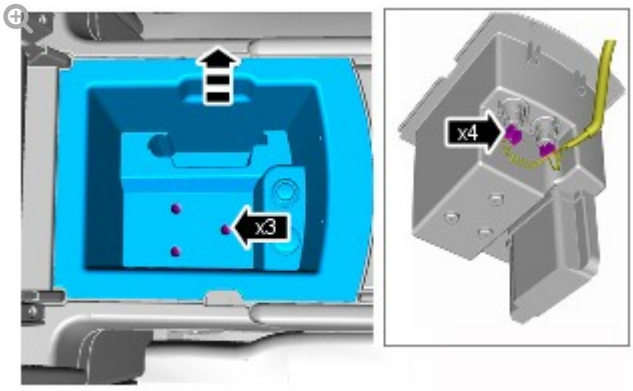

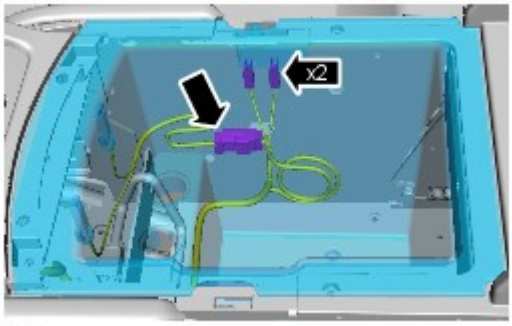

E135772

Torque: **1.5 Nm**

4.

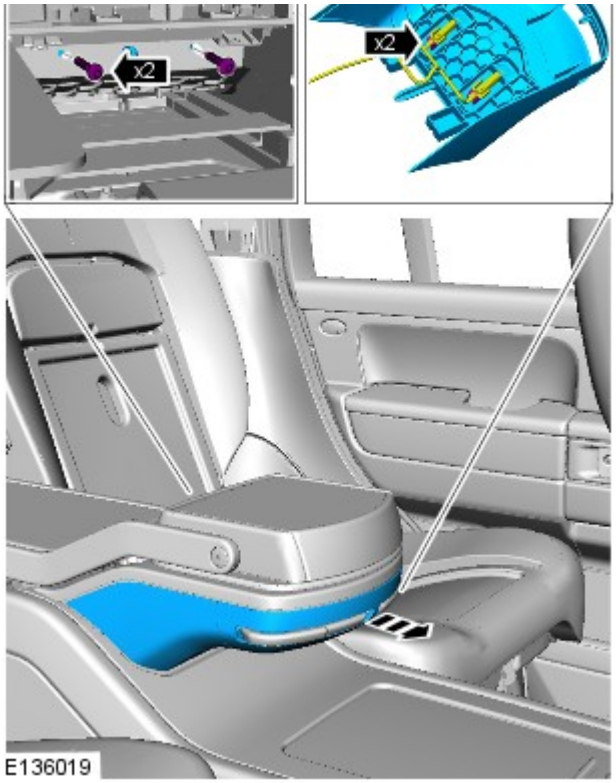

5.

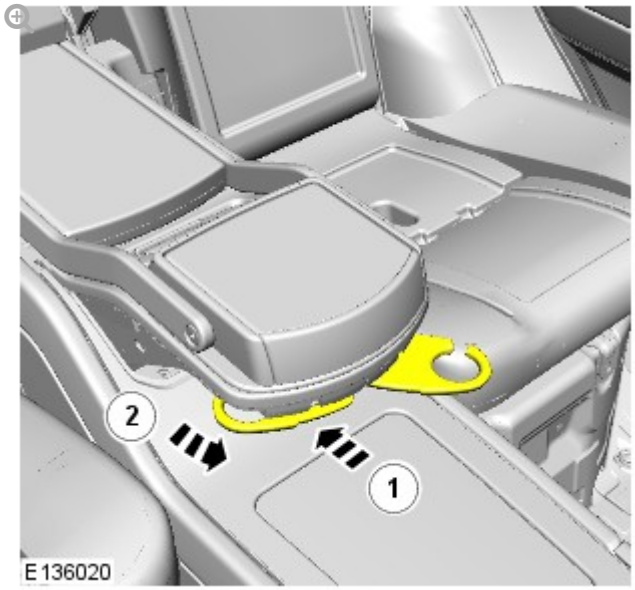

6.

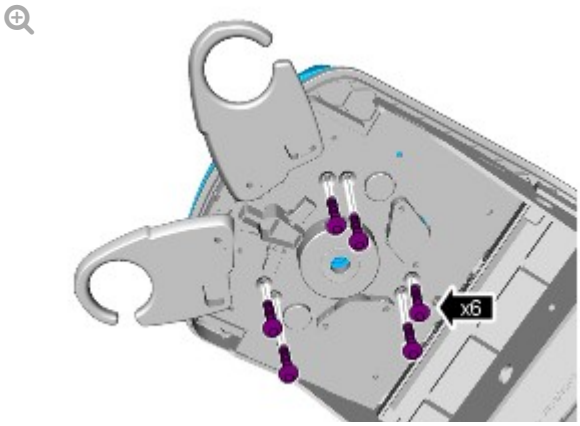

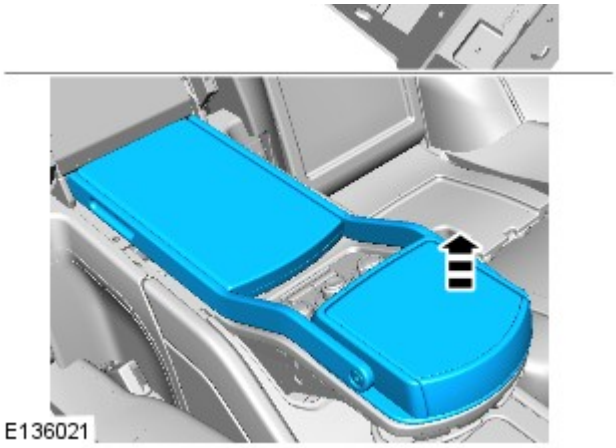

Torque: **9 Nm**

7.

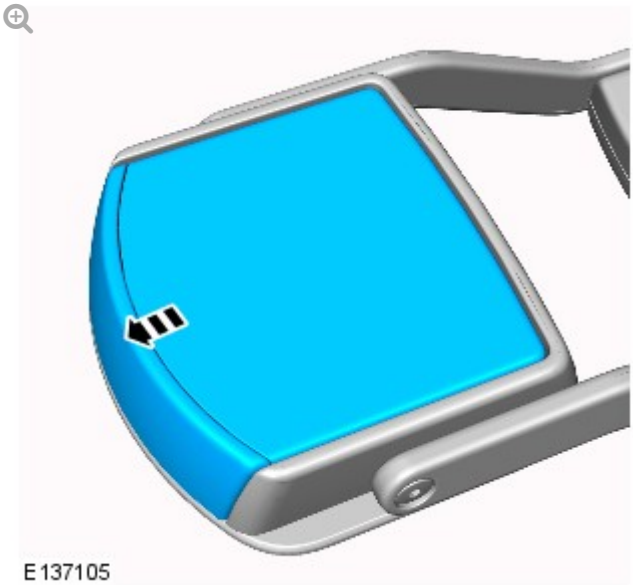

8.

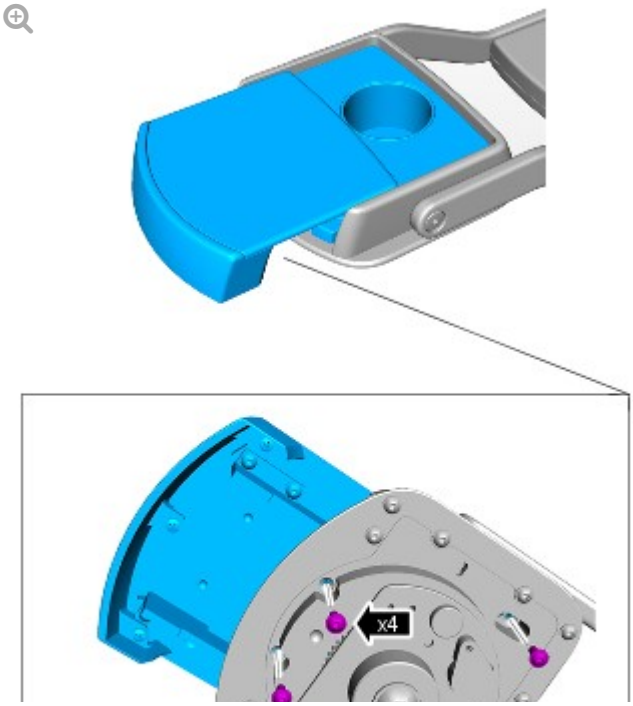

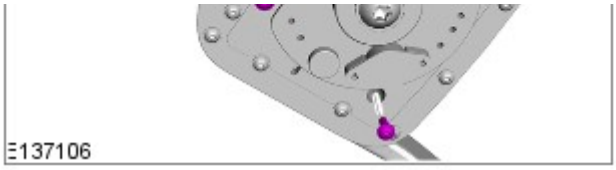

9.

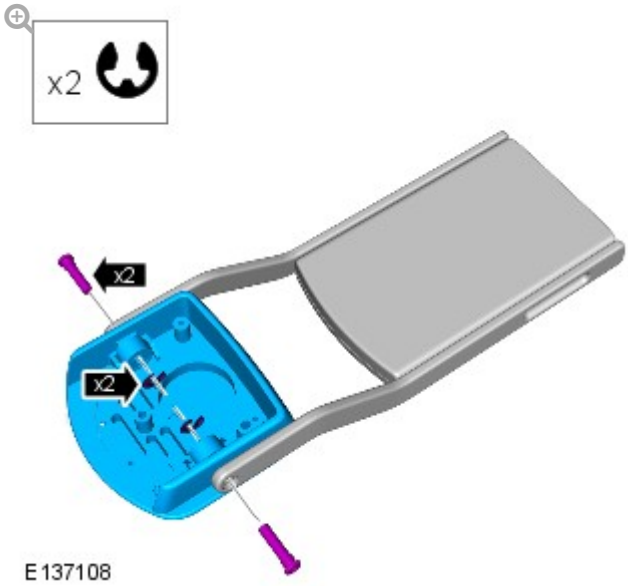

- *Torque:* **2 Nm**

INSTALLATION

1. To install, reverse the removal procedure.

2012.0 RANGE ROVER (LM), 501-14

HANDLES, LOCKS, LATCHES AND ENTRY SYSTEMS

DESCRIPTION AND OPERATION

COMPONENT LOCATION - SHEET 1 OF 2

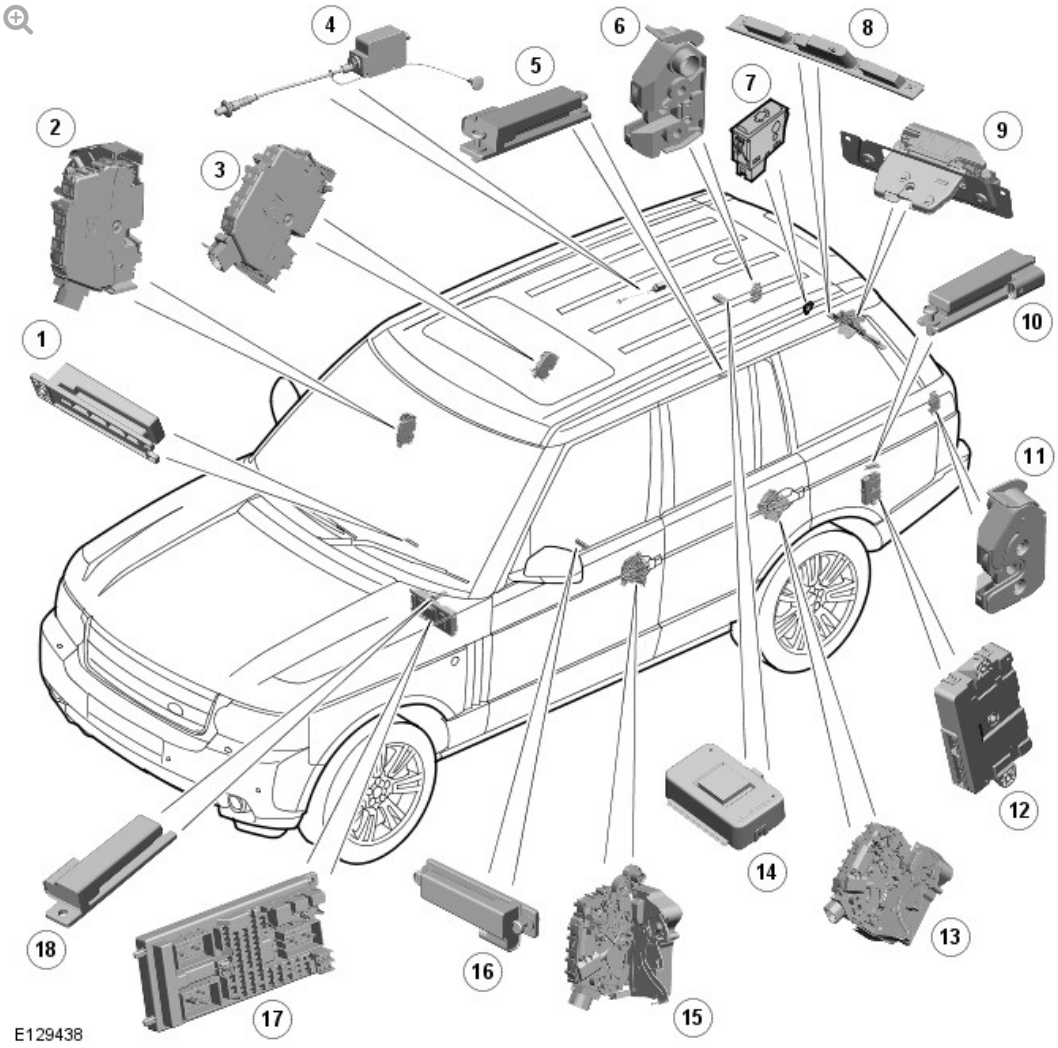

ITEM	DESCRIPTION
1	Passive start antenna - Front interior
2	Right Hand (RH) front door latch and motor
3	RH rear door latch and motor
4	Fuel flap release motor
5	Passive start antenna - Luggage compartment
6	RH lower tailgate latch and motor
7	Lower tailgate release button
8	Upper tailgate release button
9	Upper tailgate latch and motor

10	Passive start antenna - Luggage compartment
11	LH lower tailgate latch and motor
12	Keyless Vehicle Module (KVM)
13	LH rear door latch and motor
14	RF Receiver
15	LH front door latch and motor
16	Passive start antenna - Central interior
17	Central Junction Box (CJB)
18	Passive start antenna - Front interior

COMPONENT LOCATIONS - SHEET 2 OF 2

NOTE:

right-hand drive (RHD) installation shown, left-hand drive (LHD) installation similar

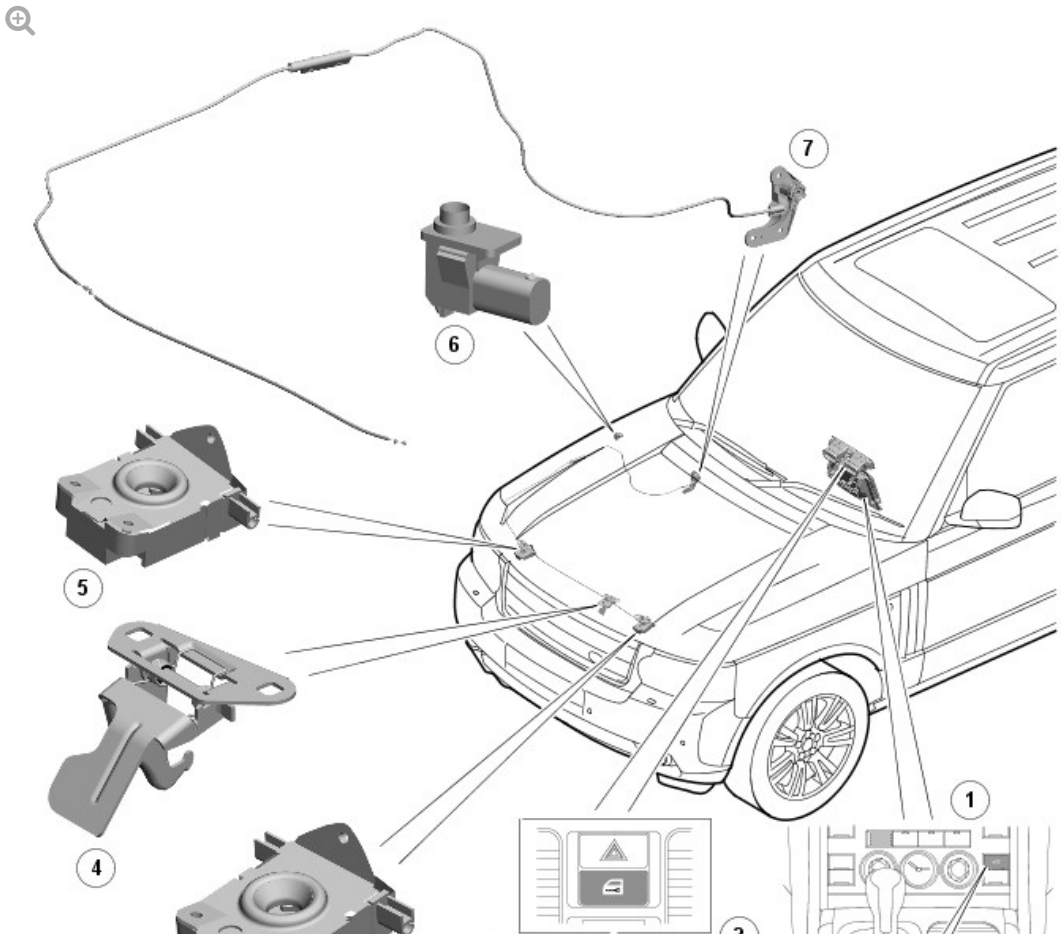

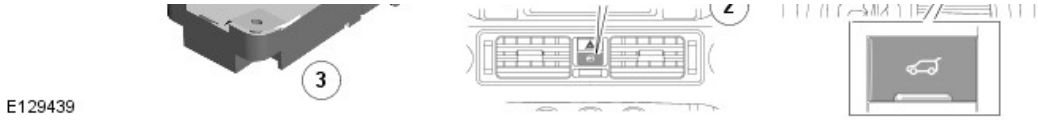

ITEM	DESCRIPTION
1	Upper tailgate internal release switch
2	Central Locking System (CLS) switch
3	LH hood latch
4	Hood safety catch
5	RH hood latch
6	Hood ajar switch
7	Hood release handle and cables

GENERAL

The hinged panels on the vehicle are secured with latches and mating strikers. A safety catch is installed on the hood to prevent it from opening if the hood latches are open while the vehicle is moving.

The hood latches and the door latches are opened by pulling on the release handles. The tailgate latches are opened by pressing the release switches.

A remotely operated CLS controls the locking and unlocking of the door latches and the opening of the tailgate latches. In some markets, the CLS also locks and unlocks the fuel filler door. The CLS software is incorporated into the CJB (central junction box).

The driver exterior door handle incorporates a door lock. The door lock enables operation of the CLS with the ignition key if the smart key operation fails, and allows the driver's door to be mechanically unlocked if there is a vehicle power failure.

The rear door latches incorporate child locks to enable the interior door handles to be disengaged from the latch mechanisms.

HOOD LATCHES

The hood is secured by two latches, installed under the hood locking platform, which engage with strikers on the hood. The hood safety catch is installed to the left of the hood leading edge centerline, and engages with a recess in the hood locking platform.

The hood latches are opened by a release handle on the lower part of the driver's side A pillar. Two hood release cables connect the release handle in series with the two hood latches. The two hood release cables are joined together by a connector block located on the inner fender.

DOOR LATCHES

The side door latches are sealed units that incorporate separate actuators for locking and superlocking the doors. Each door latch also incorporates a Hall effect sensor that operates as an ajar switch to provide a door status signal for the CJB. The driver's door latch incorporates two additional Hall effect sensors to provide signals of lock and unlock selections made with the smart key emergency key blade in the door lock. Turning the top of the emergency key blade rearwards sends a lock signal and turning the top of the emergency key blade forwards sends an unlock signal.

The driver's and front passenger door latches communicate with the CJB via their respective door modules and the medium speed CAN (controller area network) bus. The rear door latches are connected to the front door modules via a LIN (local interconnect network) bus connection. On all doors the door ajar Hall sensors are connected directly to the CJB.

Each of the door latches is mechanically connected to a locking button in the top of the door trim panel. Pressing the locking button down when the door is closed disengages the exterior handle from the door latch to lock the door. Pulling on the interior handle extends the locking button from the door trim again and re-engages the exterior handle with the door latch, to unlock the door. A second pull on the interior door handle opens the door latch. On all except the driver's door, the doors can be slam locked after pressing the button down while the door is open. For lockout protection, the driver's door locking button cannot be pressed down when the driver door is open.

Door Latch

NOTE:

Front door latch shown

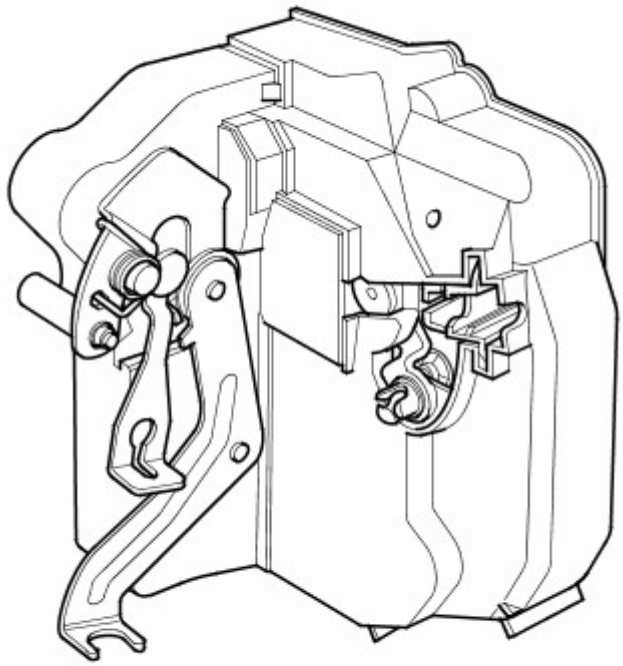

M865839

TAILGATE LATCHES

The upper tailgate latch incorporates a release actuator to open the upper tailgate and a microswitch that operates as an ajar switch to provide a tailgate status signal to the CJB. A black manual release wire is attached to the upper tailgate latch to allow the latch to be released in the event of actuator failure or loss of power. The end of the manual release wire is stowed in the inside trim at the bottom edge of the upper tailgate and is concealed by the trailing edge of the parcel shelf when the upper tailgate is closed.

Each lower tailgate latch is connected to a release actuator mounted inside

the tailgate. A lever at the top of each latch housing allows the latches to be released in the event of actuator failure or loss of power. The levers are only accessible when the upper tailgate is open.

Upper Tailgate Latch

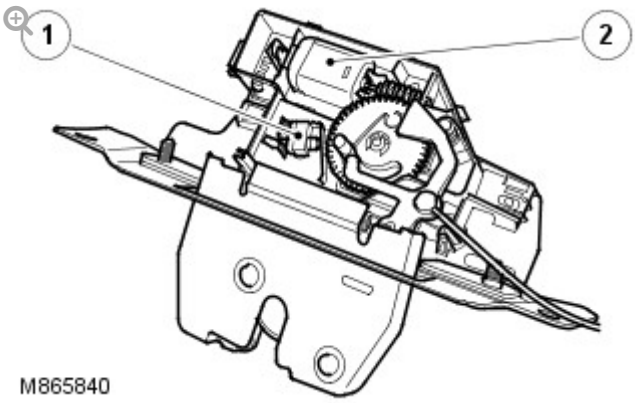

ITEM	DESCRIPTION
1	Ajar switch
2	Release actuator

HOOD AJAR SWITCH

The hood ajar switch is a plunger operated switch installed in the engine compartment, on the driver side of the secondary bulkhead. When the hood is closed, the hood presses the plunger into the switch housing and holds the switch open. When the hood opens, the spring loaded plunger extends, which allows the switch to close and connect a ground to the CJB. The switch can also be held open while the hood is open, by pulling the plunger up.

FUEL FILLER DOOR ACTUATOR

The fuel filler door actuator extends and retracts a wire reinforced plastic pin to lock and unlock the fuel filler door. A green manual release wire is attached to the pin to ensure the fuel filler door can be released in the event of actuator failure or loss of power. The end of the manual release wire is stowed in the soundproofing behind the trim panel covering the RJB (rear

junction box).

CLS SWITCH

The CLS switch is a non latching push switch installed between the center face vents on the instrument panel, below the hazard warning switch. The CLS switch allows occupants to centrally lock the vehicle without arming the alarm. When the CLS switch is pressed, a battery voltage signal is connected to the CJB.

UPPER TAILGATE INTERNAL RELEASE SWITCH

The internal upper tailgate release switch is a non latching push switch installed on the center console. The switch, which is integral with the ATC (automatic temperature control) control module, allows the tailgate to be opened from inside the vehicle. When the switch is pressed a medium speed CANsignal is passed from the to the ATC control module to the CJB. The CJB only responds to the request when the CLS system is unlocked and the vehicle is stationary.

UPPER TAILGATE EXTERNAL RELEASE SWITCH

The external upper tailgate release switch is a microswitch installed in the license plate lamp housing in the bottom edge of the upper tailgate. The switch is operated by a lever connected to a rubber covered plate set into the outside surface of the license plate lamp housing. When the switch is activated it connects a ground to the CJB. The CJB only responds to the input when the CLS system is unlocked and the vehicle is stationary.

LOWER TAILGATE RELEASE SWITCH

The lower tailgate release switch is a non latching push switch installed under a rubber cover in the top edge of the lower tailgate. When the switch is pressed, a battery voltage signal is connected to the CJB. The CJB only responds to the input when the upper tailgate is unlatched and the vehicle

is stationary.

RF RECEIVER

The RF receiver converts RF signals from the smart key into digital messages and transmits them to the CJB. The RF receiver is installed in a central position on the roof, above the roof liner, to the rear of the sunroof.

Operation of the RF receiver is powered by a permanent battery feed from the CJB. RF signals from the smart key are received by the RF receiver and passed to the keyless vehicle module (KVM) on a dedicated data line.

SYSTEM OPERATION

The locking system allows the doors and fuel filler door to be centrally locked and unlocked using the CLS switch, the driver's door lock and the smart key. The system has two locking states: locked and superlocked. Locking the vehicle from inside using the CLS switch puts the system into the locked state. Locking the vehicle from the outside using the driver's door lock or the smart key puts the vehicle into the superlocked state.

When the vehicle is locked, the CJB:

- Energizes the lock actuators in the side door latches to disengage the external door handles from the latches.
- Energizes the fuel filler door actuator to extend the locking pin to secure the filler door (all except NAS).
- Ignores inputs from the upper tailgate external release switch.

The CJB will lock the vehicle regardless of the ignition status. The upper tailgate internal release switch remains enabled and individual side doors can be unlocked using the internal door handle. From the locked state, the vehicle can be centrally unlocked using the CLS switch, the smart key or the driver's door lock.

When the vehicle is superlocked, the CJB:

- Energizes the lock and the superlock actuators in the side door latches to

disengage both the internal and the external door handles from the latches.

- Energizes the fuel filler door actuator to extend the locking pin to secure the filler door (all except NAS).
- Ignores inputs from both the external and the internal release switches of the upper tailgate.
- Ignores inputs from the CLS switch.

The CJB will only superlock the vehicle after the ignition is off and the driver's door has opened. From the superlocked state, the vehicle can be centrally unlocked using the smart key or the driver's door lock.

TAILGATE OPENING

When the vehicle is locked or superlocked, operating the tailgate release button on the smart key causes the CJB to actuate the upper tailgate release actuator while leaving the remainder of the system in the locked/superlocked condition.

Volumetric protection is disabled when the tailgate is opened.
For additional information, refer to: Anti-Theft - Active (419-01A, Description and Operation).

SINGLE POINT ENTRY (SPE)

With the vehicle superlocked and SPE is enabled, when the CJB receives a request from the smart key or the driver's door lock, it unlocks the driver's door and changes the rest of the CLS from the superlocked to the locked state. When it receives a second unlock request, from the smart key, the driver's door lock or the CLS switch, the CJB unlocks the remainder of the system.

AUTOMATIC LOCKING

The CJB can be configured to automatically lock the system when the vehicle exceeds a set speed. The set speed is selectable between 4 and 28 km/h (2.5 and 17.5 mph), in 4 km/h (2.5 mph) increments.

To guard against accidental unlocking, the CJB can also be configured to automatically lock (not superlock) the system if no ajar switch or CLS switch is activated within 2 minutes of unlocking the vehicle with the remote

handset.

AUTOMATIC UNLOCKING

If a crash that triggers any of the air bags occurs, the restraints control module (RCM) outputs a crash signal to the CJB. On receipt of the crash signal the CJB outputs unlock signals to all of the door latch actuators, via the door modules and, where fitted, the fuel filler door actuator, irrespective of their current locked state. Subsequent attempts to lock the doors are inhibited until the CJB has received an unlock request.

REPETITION BLOCKING

To protect the door latch actuators the CJB incorporates a repetition blocking feature. The CJB increments an internal counter by one each time an actuation occurs and decrements the counter by one every 8 seconds. If the counter exceeds 15, the CJB blocks further unlocking commands until the counter returns to 15 or less. The block is ignored if the CJB receives a crash signal or the system goes from superlocked to locked. In addition to the counter for the side doors, separate counters are maintained for each of the tailgates.

LOCKOUT PROTECTION

The vehicle cannot be locked when either of the front doors is open. The vehicle cannot be superlocked when the driver door is open.

CONTROL DIAGRAM

NOTE:

A = Hardwired connection; **F** = RF transmission; **N** = Medium speed CAN bus; **O** = LIN bus; **AC** = Data line

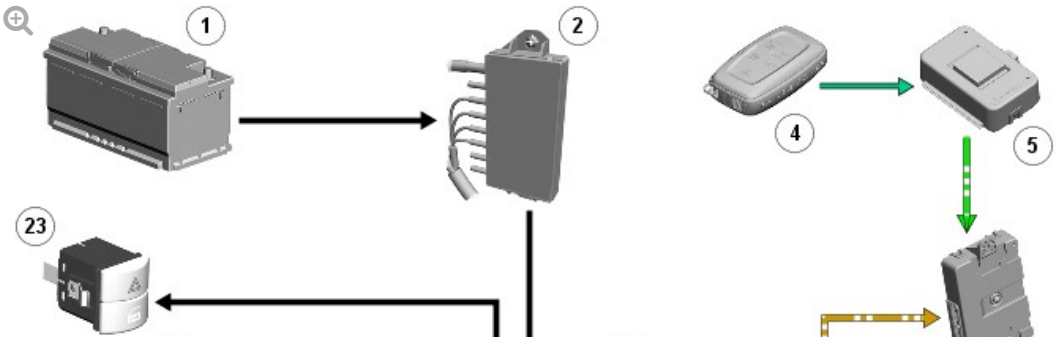

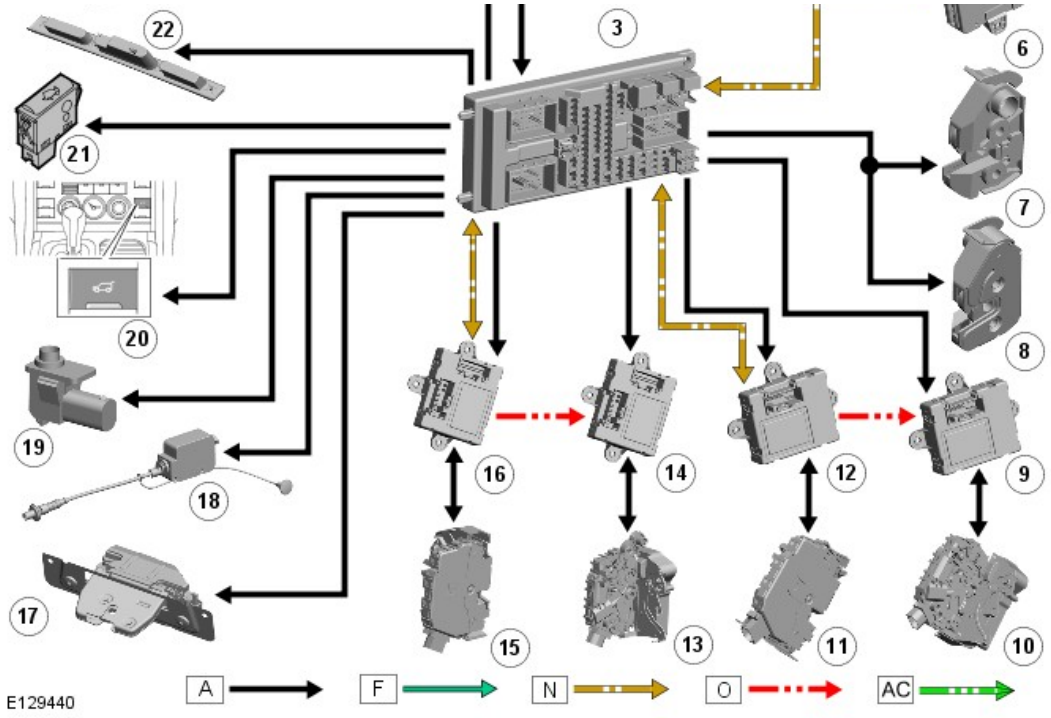

ITEM	DESCRIPTION
1	Battery
2	Battery Junction Box (BJB)
3	Central Junction Box (CJB)
4	Smart key
5	Radio Frequency (RF) receiver
6	Keyless Vehicle Module (KVM)
7	RH lower tailgate latch and motor
8	LH lower tailgate latch and motor
9	LH rear door module
10	LH rear door latch and motor
11	RH rear door latch and motor
12	RH rear door module
13	LH front door latch and motor
14	LH front door module
15	RH front door latch and motor
16	RH front door module
17	Upper tailgate latch and motor

18	Fuel flap release motor
19	Hood ajar switch
20	Upper tailgate internal release switch
21	Lower tailgate release button
22	Upper tailgate release button
23	Central Locking System (CLS) switch

2012.0 RANGE ROVER (LM), 501-14

HANDLES, LOCKS, LATCHES AND ENTRY SYSTEMS

DIAGNOSIS AND TESTING

PRINCIPLE OF OPERATION

For a detailed description of the locks, latches and entry systems and operation, refer to the relevant Description and Operation section of the workshop manual. REFER to: Handles, Locks, Latches and Entry Systems (501-14 Handles, Locks, Latches and Entry Systems, Description and Operation).

INSPECTION AND VERIFICATION

CAUTION:

Diagnosis by substitution from a donor vehicle is **NOT** acceptable. Substitution of control modules does not guarantee confirmation of a fault and may also cause additional faults in the vehicle being checked and/or the donor vehicle.

NOTE:

Check and rectify basic faults before beginning diagnostic routines involving pinpoint tests.

1. Verify the customer concern.

1. Visually inspect for obvious signs of mechanical or electrical damage.

Visual Inspection

MECHANICAL	ELECTRICAL
▪ Misaligned door(s), hood or tailgate ▪ Fuel filler door lock actuator ▪ Hood release handle ▪ Hood release cables ▪ Hood latch(es) ▪ Exterior door handle(s) ▪ Interior door handle(s) ▪ Cable(s) ▪ Tailgate release switch ▪ Rear window release switch	▪ Fuses ▪ Wiring harness ▪ Wiring connector(s) ▪ Door lock actuator(s) ▪ Remote transmitter ▪ Central locking switches ▪ Controller Area Network (CAN) circuits ▪ Radio frequency (RF) receiver ▪ Central Junction Box (CJB) ▪ Loose or corroded connections

1. If an obvious cause for an observed or reported concern is found, correct the cause (if possible) before proceeding to the next step.

1. If the cause is not visually evident, verify the symptom and refer to the Symptom Chart, alternatively check for Diagnostic Trouble Codes

(DTCs) and refer to the DTC Index.

SYMPTOM CHART

SYMPTOM	POSSIBLE CAUSES	ACTION
The message center indicates that the hood, the tailgate or a door is open when it appears to be closed	▪ Incorrect striker alignment/adjustment ▪ Ajar switch circuit short circuit to ground ▪ Ajar switch failure	Check/adjust the strikers as necessary. Check for DTCs indicating an ajar switch fault. Refer to the DTC index.
Vehicle indicates a mislock when the hood, tailgate and doors appear to be closed		
Fuel flap does not lock/unlock	▪ Fuel flap cable detached from body ▪ Fuel flap actuator detached from mounting bracket ▪ Fuel flap actuator disconnected ▪ Fuel flap actuator failure	Check the condition and installation of the fuel flap cable. Check the security of the fuel flap actuator and bracket. Check the security of the actuator electrical connector. Check for DTCs indicating a fuel flap actuator fault. Refer to the DTC index.
Single door will not open from the outside (but opens from the inside)	▪ Door latch ▪ Cable fault ▪ Door handle	GO to Pinpoint Test **A.**
Single door will not open from the inside (but opens from the outside)	▪ Door latch ▪ Cable fault ▪ Door handle ▪ Child lock	GO to Pinpoint Test **B.**
Single door will not lock	▪ Door latch ▪ Cable fault ▪ Door handle ▪ Door lock switch ▪ Wiring harness	GO to Pinpoint Test **C.**

Door ajar warning message illuminated on instrument cluster	▪ Door latch ▪ Wiring harness ▪ Instrument cluster	GO to Pinpoint Test **D.**

DTC INDEX

For a list of Diagnostic Trouble Codes (DTCs) that could be logged on this vehicle, please refer to Section 100-00. REFER to: (100-00 General Information)

Diagnostic Trouble Code (DTC) Index - DTC: Module Name: Central Junction Box (Description and Operation),
Diagnostic Trouble Code (DTC) Index - DTC: Module Name: Driver/Passenger Door Module (Description and Operation),
Diagnostic Trouble Code (DTC) Index - DTC: Module Name: Remote Function Actuator (Description and Operation),
Diagnostic Trouble Code (DTC) Index - DTC: Module Name: Steering Column Lock Module (Description and Operation).

PINPOINT TEST

PINPOINT TEST A : SINGLE DOOR WILL NOT OPEN FROM THE OUTSIDE (BUT OPENS FROM THE INSIDE)	
TEST CONDITIONS	DETAILS/RESULTS/ACTIONS
A1: CHECK THE EXTERIOR DOOR RELEASE CABLE TO EXTERIOR DOOR HANDLE IS INSTALLED CORRECTLY	
	1 Remove the door trim panel as necessary. REFER to: Front Door Trim Panel (501-05, Removal and Installation) / Rear Door Trim Panel (501-05, Removal and Installation).
	2 Check the exterior door release cable is correctly installed to the exterior door handle.
	Is the cable correctly installed? **Yes** GO to A2. **No** Connect the door release cable correctly. If the cable is damaged, install a new door release cable. Test the system for normal operation.

A2: CHECK THE EXTERIOR DOOR HANDLE RELEASE CONNECTION TO THE DOOR LATCH	
	1 Is the exterior door handle release connection to the door latch installed correctly.
	Is the exterior door handle release cable installed correctly? **Yes** GO to A3. **No** Connect the door release cable correctly. If the cable is damaged, install a new door release cable. Test the system for normal operation.
A3: CHECK THE DOOR LATCH FOR CORRECT OPERATION USING THE EXTERIOR DOOR HANDLE	
	1 With the door open, use a suitable screwdriver to latch the door latch and pull the exterior door handle to confirm door latch release.
	Does the door latch release? **Yes** GO to A4. **No** Install a new door latch as necessary.
A4: CHECK FULL OPERATION OF THE DOOR AFTER HARD CLOSING	
	1 Make sure that the door opens, closes, locks and unlocks as per normal operation after a hard door closing. Repeat this process 5 times.
	Does the door operate correctly? **Yes** Test the system for normal operation. **No** Install a new door latch as necessary.

PINPOINT TEST B : SINGLE DOOR WILL NOT OPEN FROM THE INSIDE (BUT OPENS FROM THE OUTSIDE)	
TEST CONDITIONS	DETAILS/RESULTS/ACTIONS
B1: CHECK THE INTERIOR DOOR RELEASE CABLE TO INTERIOR DOOR HANDLE IS INSTALLED CORRECTLY	
	1 Make sure the child lock is disengaged as necessary.
	2 Remove the door trim panel as necessary. REFER to: Front Door Trim Panel (501-05, Removal and Installation) / Rear Door Trim Panel (501-05, Removal and Installation).
	3 Check the interior door release cable is correctly installed to the interior door handle.
	Is the cable correctly installed?

	Is the cable correctly installed? **Yes** GO to B2. **No** Connect the door release cable correctly. If the cable is damaged, install a new door release cable. Test the system for normal operation.
B2: CHECK THE INTERIOR DOOR HANDLE RELEASE CONNECTION TO THE DOOR LATCH	
	1 Is the interior door handle release connection to the door latch installed correctly?
	Is the interior door handle release cable installed correctly? **Yes** GO to B3. **No** Connect the door release cable correctly. If the cable is damaged, install a new door release cable. Test the system for normal operation.
B3: CHECK THE DOOR LATCH CABLE PLASTIC RETAINING CLIP/HOUSING FOR DAMAGE	
	1 Check the door latch cable plastic retaining clip/housing for damage.
	Is the door latch cable plastic retaining clip/housing for damaged? **Yes** Install a new door latch as necessary. **No** GO to B4.
B4: CHECK THE DOOR LATCH FOR CORRECT OPERATION USING THE INTERIOR DOOR HANDLE	
	1 With the door open, use a suitable screwdriver to latch the door latch and pull the interior door handle to confirm door latch release.
	Does the door latch release? **Yes** GO to B5. **No** Install a new door latch as necessary.
B5: CHECK FULL OPERATION OF THE DOOR AFTER HARD CLOSING	
	1 Make sure that the door opens, closes, locks and unlocks as per normal operation after a hard door closing. Repeat this process 5 times.
	Does the door operate correctly? **Yes** Test the system for normal operation. **No** Install a new door latch as necessary.

PINPOINT TEST C : SINGLE DOOR WILL NOT LOCK	
TEST	DETAILS/RESULTS/ACTIONS

CONDITIONS	DETAILS/RESULTS/ACTIONS
C1: CHECK THE LOCKING BUTTON OPERATION	
	1 Check if the door latch locks/unlocks by activating the locking button.
	Does the door lock and unlock? **Yes** GO to C2. **No** GO to C5.
C2: CHECK THE DOOR LATCH ELECTRICAL CONNECTOR IS CORRECTLY INSTALLED	
	1 Make sure that the door latch electrical connector is installed correctly.
	Is the electrical connector installed correctly? **Yes** GO to C3. **No** Install the door latch electrical connector. Test the system for normal operation.
C3: CHECK THE DOOR LATCH ELECTRICAL CONNECTOR TERMINALS FOR DAMAGE	
	1 Disconnect the door latch electrical connector.
	2 Check the door latch electrical connector and door latch terminals for damage or corrosion.
	Are the terminals damaged or corroded? **Yes** Repair the electrical connector as necessary. Test the system for normal operation. If the terminals on the door latch are damaged, install a new door latch as necessary. **No** GO to C4.
C4: CHECK THE VOLTAGE TO THE DOOR LATCH	
	1 Check for voltage at the door latch electrical connector.
	Is the voltage greater than 10 volts? **Yes** Install a new door latch as necessary. **No** Repair the wiring harness. Test the system for normal operation. If the concern continues, install a new door latch as necessary.
C5: CHECK THE INTERIOR DOOR HANDLE RELEASE CONNECTION TO THE DOOR LATCH	
	1 Is the interior door handle release cable to the door latch installed correctly?
	Is the interior door handle release cable installed correctly?

	Yes GO to C6. **No** Connect the door release cable correctly. If the cable is damaged, install a new door release cable. Test the system for normal operation.
C6: CHECK THE DOOR LATCH CABLE PLASTIC RETAINING CLIP/HOUSING FOR DAMAGE	
	1 Check the door latch cable plastic retaining clip/housing for damage.
	Is the door latch cable plastic retaining clip/housing for damaged? **Yes** Install a new door latch as necessary. **No** GO to C7.
C7: CHECK THE DOOR LATCH FOR CORRECT OPERATION USING THE INTERIOR DOOR HANDLE	
	1 With the door open, use a suitable screwdriver to latch the door latch and activate the locking button to confirm the door latch has locked.
	Does the door latch lock? **Yes** GO to C8. **No** Install a new door latch as necessary.
C8: CHECK FULL OPERATION OF THE DOOR AFTER HARD CLOSING	
	1 Make sure that the door opens, closes, locks and unlocks as per normal operation after a hard door closing. Repeat this process 5 times.
	Does the door operate correctly? **Yes** Test the system for normal operation. **No** Install a new door latch as necessary.

PINPOINT TEST D : DOOR AJAR WARNING MESSAGE ILLUMINATED ON INSTRUMENT CLUSTER	
TEST CONDITIONS	DETAILS/RESULTS/ACTIONS
D1: CHECK THE DOOR LATCH ELECTRICAL CONNECTOR IS CORRECTLY INSTALLED	
	1 Make sure that the door latch electrical connector is installed correctly.
	Is the electrical connector installed correctly? **Yes** GO to D2. **No**

	Install the door latch electrical connector. Test the system for normal operation.
D2: CHECK THE DOOR LATCH ELECTRICAL CONNECTOR TERMINALS FOR DAMAGE	
	1 Disconnect the door latch electrical connector.
	2 Check the door latch electrical connector and door latch terminals for damage or corrosion.
	Are the terminals damaged or corroded? **Yes** Repair the electrical connector as necessary. Test the system for normal operation. If the terminals on the door latch are damaged, install a new door latch as necessary. **No** GO to D3.
D3: CHECK FULL OPERATION OF THE DOOR AFTER HARD CLOSING	
	1 Connect the door latch electrical connector.
	2 Make sure that the door opens, closes, locks and unlocks as per normal operation after a hard door closing. Repeat this process 5 times.
	Does the door operate correctly? **Yes** Test the system for normal operation. **No** Install a new door latch as necessary.

TAILGATE STRIKER ADJUSTMENT (G916895)

GENERAL PROCEDURES

76.28.03	TAILGATE - STRIKER EACH - CHECK AND ADJUST	ALL DERIVATIVES	0.1	USED WITHINS	+

1. Check for an equal gap and alignment to the adjacent panels. If incorrect, follow the adjust procedure below.

2. 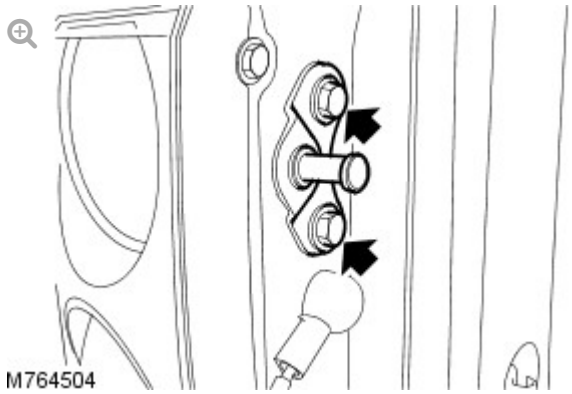

   Loosen the 2 tailgate striker bolts.

3. Close the tailgate and check for an equal gap and alignment to the

adjacent panels.

4. Secure the tailgate striker.
   - Tighten the screws to 25 Nm (18 lb.ft).

2012.0 RANGE ROVER (LM), 501-14

HANDLES, LOCKS, LATCHES AND ENTRY SYSTEMS

LIFTGATE STRIKER ADJUSTMENT

ADJUSTMENT (G928366)

GENERAL PROCEDURES

1. Check for an equal gap and alignment to the adjacent panels. If incorrect, follow the adjust procedure below.

2. Remove the tailgate upper trim panel.
   - Remove the 6 screw covers.
   - Remove the 6 screws.

3. 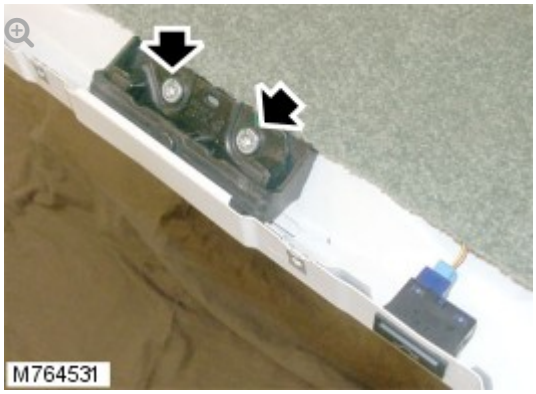

   Loosen the 2 screws securing the liftgate striker.

4. Close the liftgate and check for an equal gap and alignment to the adjacent panels.

5. Open the liftgate.
   - Tighten the screws to 10 Nm (7 lb.ft).

6. Install the tailgate upper trim panel.
   - Install the screws.
   - Install the screw covers.

2012.0 RANGE ROVER (LM), 501-14

HANDLES, LOCKS, LATCHES AND ENTRY SYSTEMS

EXTERIOR FRONT DOOR HANDLE (G963547)

REMOVAL AND INSTALLATION

76.58.07	HANDLE - EXTERIOR - FRONT DOOR - RENEW	ALL DERIVATIVES	0.8	USED WITHINS	+

REMOVAL

1. Remove the front exterior door handle mechanism.
   For additional information, refer to: Exterior Door Handle Mechanism (501-14, Removal and Installation).

2. **NOTE:**

   Note the orientation of the return spring.

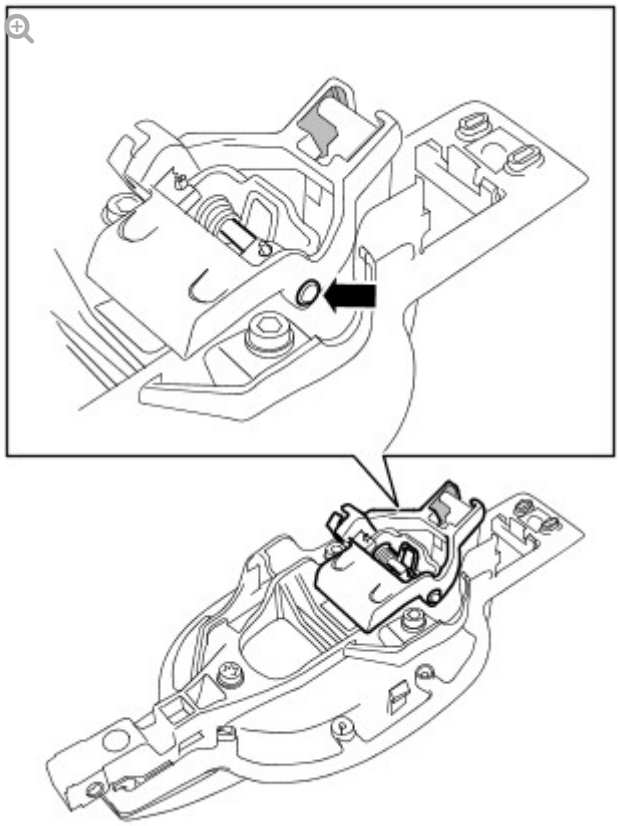

E91701

Remove the mass balance assembly.

- Remove the mass balance pivot pin.
- Discard the retaining clip.
- Remove the return spring.

3.

E91700

Remove the front door exterior handle.

- Remove the exterior door handle pivot pin.

INSTALLATION

1.

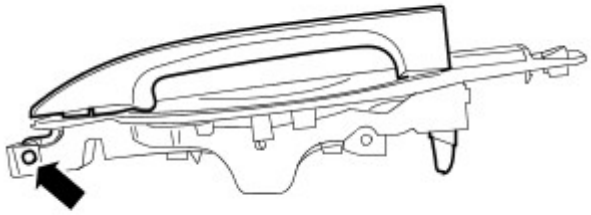

E91700

Install the front door exterior handle.

- Install the exterior door handle pivot pin.

2.

NOTE:

Make sure the return spring is installed to the correct position.

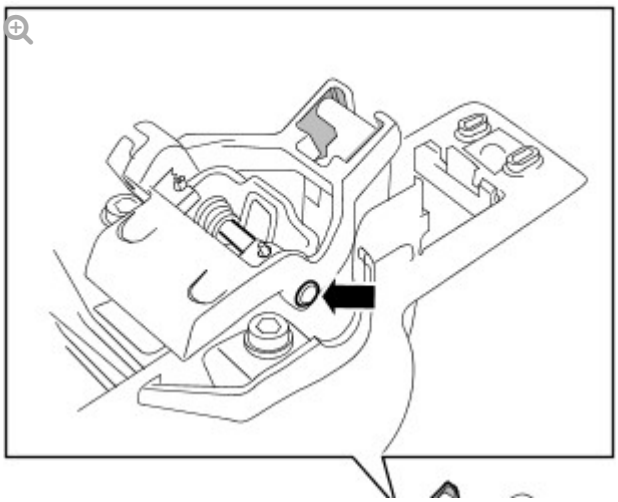

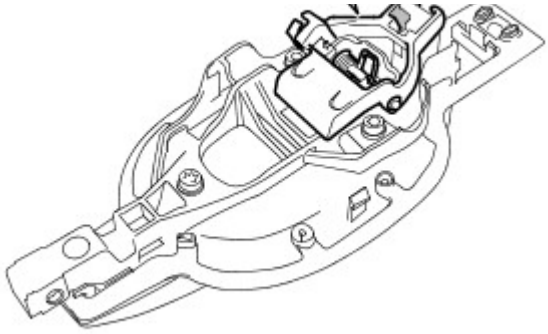

E91701

Install the mass balance assembly.

- Install the return spring.
- Install the mass balance pivot pin.

3.

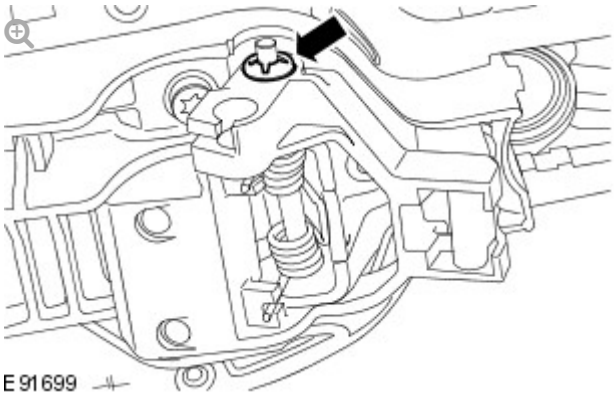

E91699

Install the mass balance pivot pin retaining clip.

4.

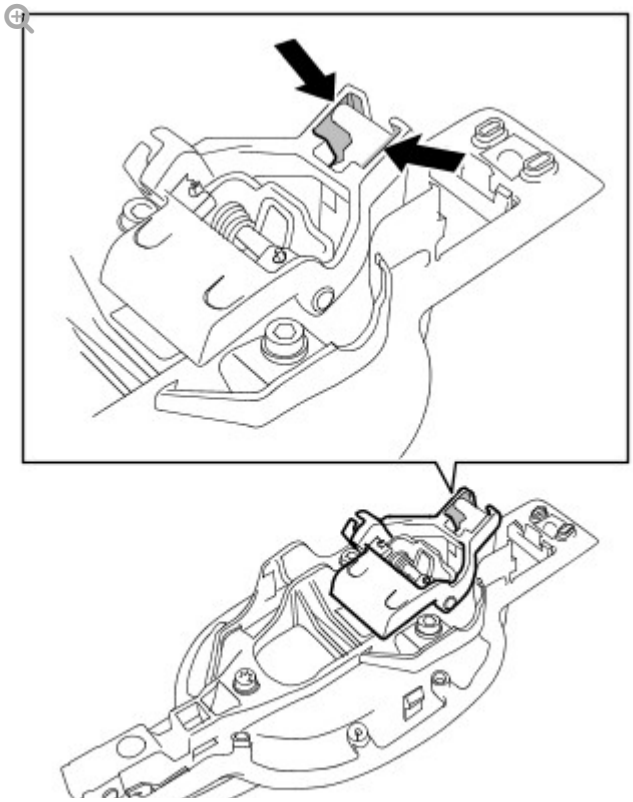

Lubricate the mass balance assembly contact area.

5. Install the front exterior door handle mechanism.
   For additional information, refer to: Exterior Door Handle Mechanism (501-14, Removal and Installation).

EXTERIOR DOOR HANDLE MECHANISM (G914390)

REMOVAL AND INSTALLATION

REMOVAL

1. Remove the side air bag module.
   For additional information, refer to: Side Air Bag Module (501-20, Removal and Installation).

2. Disconnect the door speaker electrical connector.

3. Remove the front door inner weathershield.

4. 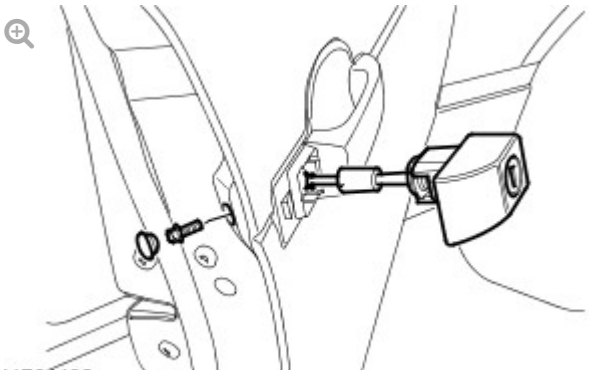

M764490

Remove the grommet for access to the lock screw.

5. Remove the screw securing the lock and remove the lock assembly.

6.

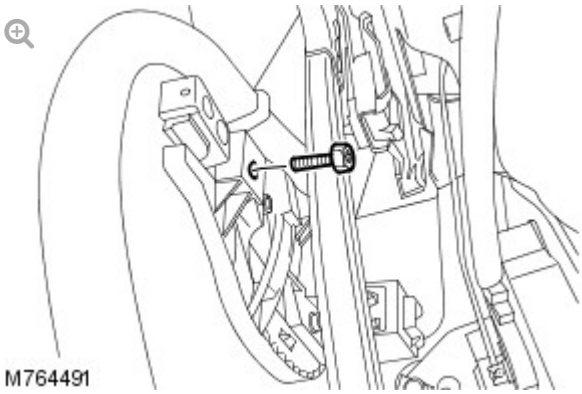

M764491

Remove the screw securing the exterior front door handle.

7. Remove the front door exterior handle.

8.

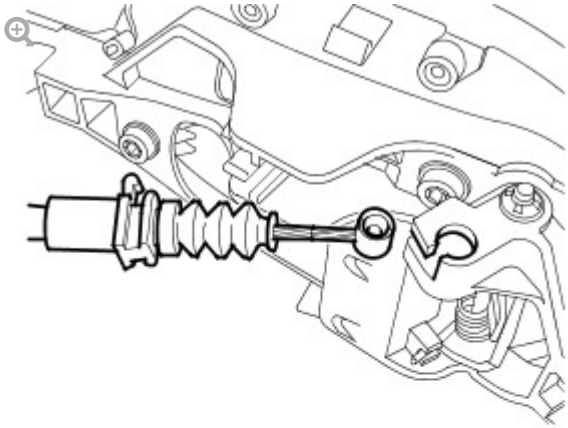

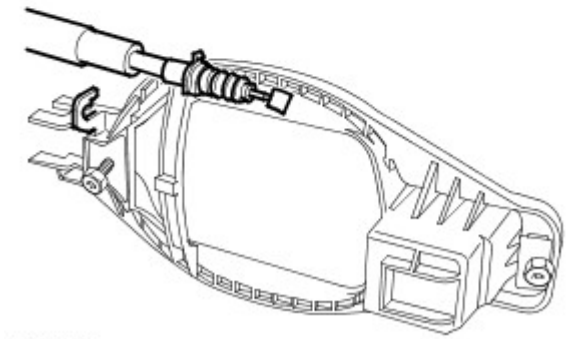

M764492

Disconnect the release cable from the exterior front door handle.

9. Remove the exterior front door handle.

10. Release the cable from the clip and collect the reinforcement.

INSTALLATION

1. Connect the latch release cable to door handle.
2. Position the inner reinforcement to the door.
3. Install the cable to the inner reinforcement and secure in the clip.
4. Install the exterior front door handle, align and install the screw.
   - Do not fully tighten at this stage.
5. Check for correct alignment.
   - Tighten the screw to 10 Nm (7 lb.ft).
6. Check the operation of the exterior front door handle and the lock.
7. Install the grommet.
8. Install the front door inner weathershield.
9. Connect the door speaker electrical connector.
10. Install the side air bag module.
    For additional information, refer to: Side Air Bag Module (501-20, Removal and Installation).

FRONT DOOR LATCH

FRONT DOOR LATCH (G916825)

REMOVAL AND INSTALLATION

76.37.06	LATCH - FRONT DOOR - LEFT HAND - RENEW	ALL DERIVATIVES	0.7	USED WITHINS	+
76.37.12	LATCH - FRONT DOOR - RIGHT HAND - RENEW	ALL DERIVATIVES	0.7	USED WITHINS	+

REMOVAL

1. Raise the front door window glass.

2. Remove the side air bag module.
   For additional information, refer to: Side Air Bag Module (501-20, Removal and Installation).

3. Disconnect the door speaker electrical connector.

4. Remove the front door inner weathershield.

5. 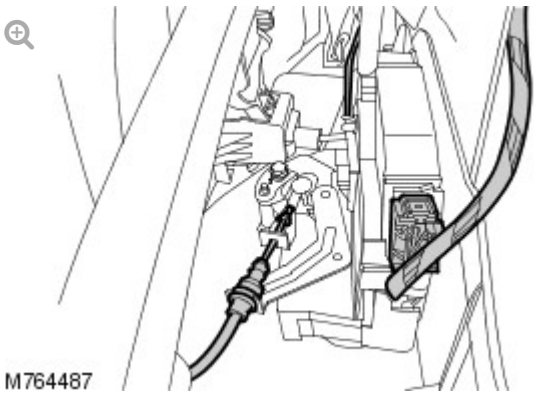

Remove the push button rod from the front door latch.

- Release the clip.
- Remove the rod.

6. Disconnect the front door latch electrical connector.

7. Disconnect the front door latch release cable.

8.

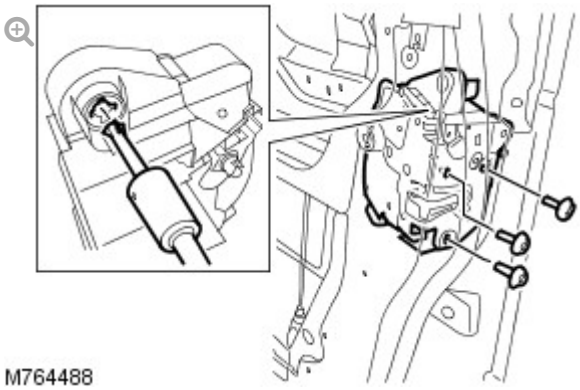

Release the front door latch assembly.

- Remove the 3 screws.

9. Release the door lock cylinder cable from the front door latch.

10. Remove the front door latch assembly.

11.

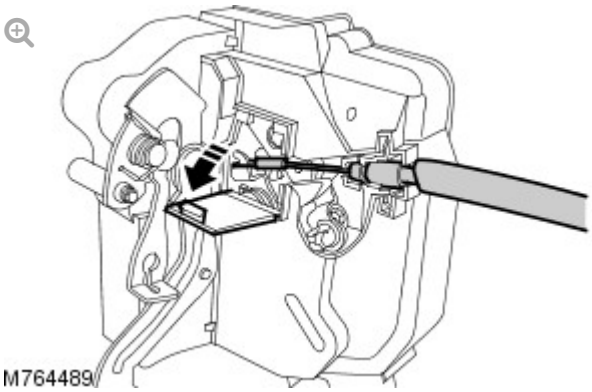

Remove the interior front door handle release cable.

- Release the access cover.
- Release the front door interior handle release cable.

INSTALLATION

1. Install the interior front door handle release cable.
   - Secure the front door interior handle release cable.
   - Secure the access cover.
2. Install the front door latch assembly.
   - Secure the door lock cylinder cable to the door latch.
   - Install the 3 screws and tighten to 10 Nm (7 lb.ft).
3. Connect the front door latch release cable.
4. Connect the front door latch electrical connector.
5. Install the push button rod to the front door latch.
6. Check the operation of the front door latch.
7. Install the front door inner weathershield.
8. Connect the door speaker electrical connector.
9. Install the side air bag module.
   For additional information, refer to: Side Air Bag Module (501-20, Removal and Installation).
10. Remove the front door latch adjustment screw access grommet.
11. **NOTE:**

    Rotate the front door latch adjusting screw anti-clockwise on LH doors and clockwise on RH doors.

Release door latch adjustment by rotating the screw 2 complete turns.

12. Tighten the front door latch adjustment screw to 4 Nm (3 lb.ft).

13. Install the front door latch adjustment screw grommet.

HANDLES, LOCKS, LATCHES AND ENTRY SYSTEMS

IGNITION LOCK CYLINDER

(G899909)

REMOVAL AND INSTALLATION

REMOVAL

WARNINGS:

- Persons working on the supplemental restraint system (SRS) must be fully trained and have been issued with the safety guidelines.
- Allow a period of 10 minutes to elapse after disconnecting the battery before undertaking any work on the SRS.
- The SRS electrical connectors are unique. DO NOT force, or attempt to connect electrical connectors to the wrong sockets.
- The correct procedures must always be used when working on SRS components.
- It is imperative that before any work is undertaken on the SRS system, the appropriate information is read thoroughly.
- Always disconnect both battery cables before beginning work on the SRS system. Disconnect the ground cable first. Never reverse connect the battery.
- Take extra care when handling SRS components.

1. Turn the ignition key to position I.

2. Make the air bag supplemental restraint system (SRS) safe.
   For additional information, refer to: Standard Workshop Practices (100-00, Description and Operation).

3. Disconnect the battery ground cable.
   For additional information, refer to: Specifications (414-00, Specifications).

4. Remove the lower center registers panel assembly.
   For additional information, refer to: Lower Center Registers Panel Assembly (501-12, Removal and Installation).

5. 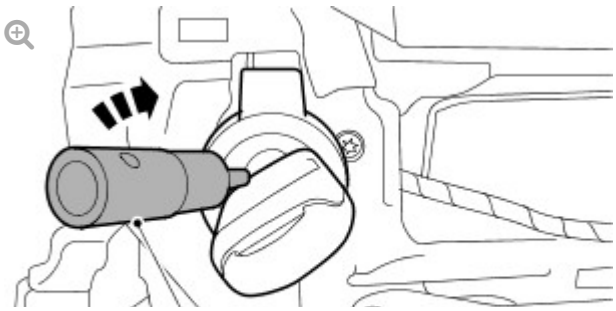

Insert the special tool into the ignition lock cylinder access hole and rotate the special tool clockwise to release the ignition lock cylinder from the ignition lock cylinder housing.

6. Disconnect the transponder coil electrical connector.

7. Remove the ignition lock cylinder.

8. Remove the ignition key.

9.

Remove the transponder coil.

1. Disconnect the transponder coil electrical connector.

INSTALLATION

1. Install the transponder coil.

2. Turn the ignition key to position I.

3. Connect the transponder coil electrical connector.

4. Install the special tool into the ignition lock cylinder access hole and rotate the special tool clockwise to install the ignition lock cylinder.

5. 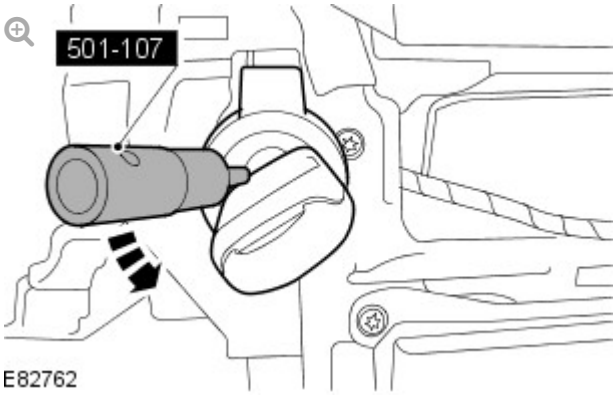

Remove the special tool.

- Rotate the special tool counter clockwise to secure the ignition lock cylinder to the ignition lock cylinder housing.

6. Remove the ignition key.

7. Install the lower center registers panel assembly.
For additional information, refer to: Lower Center Registers Panel Assembly (501-12, Removal and Installation).

8. Connect the battery ground cable.
For additional information, refer to: Specifications (414-00, Specifications).

2012.0 RANGE ROVER (LM), 501-14

HANDLES, LOCKS, LATCHES AND ENTRY SYSTEMS

LIFTGATE LATCH (G914094)

REMOVAL AND INSTALLATION

76.37.17	LATCH - TAILGATE - RENEW	ALL DERIVATIVES	0.5	USED WITHINS	+

REMOVAL

1. Remove the liftgate upper trim panel.
   For additional information, refer to: Liftgate Lower Trim Panel (501-05, Removal and Installation).

2. 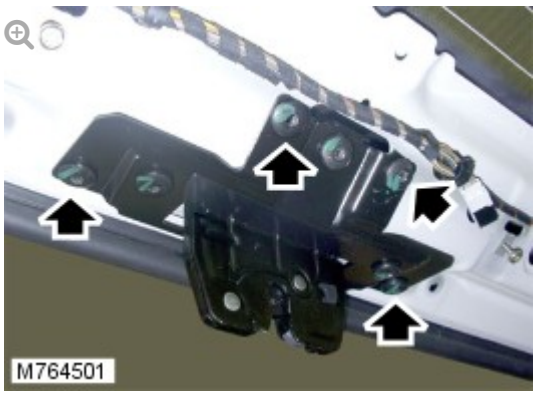

Release the liftgate latch.

- Remove the 4 screws.

3.

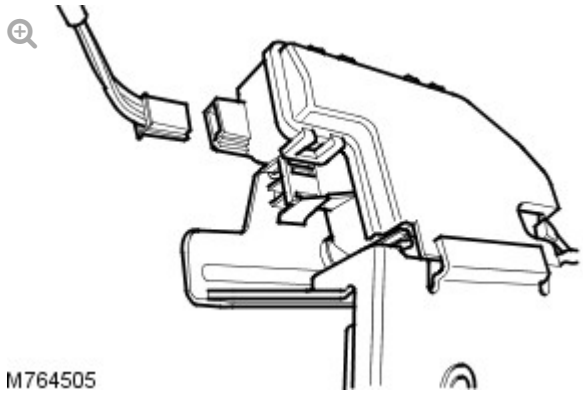

Remove the liftgate latch.

- Disconnect the electrical connector.

4.

NOTE:

Do not disassemble further if the component is removed for access only.

Disconnect the manual release cable.

5. Remove the liftgate latch bracket.

- Remove the 3 screws.

INSTALLATION

1. Install the liftgate latch bracket.

- Tighten to 10 Nm (7 lb.ft).

2. Connect the manual release cable.

3. Install the liftgate latch.

- Connect the electrical connector.

- Tighten to 10 Nm (7 lb.ft).

4. Install the liftgate upper trim panel.
   For additional information, refer to: Liftgate Lower Trim Panel (501-05, Removal and Installation).

5. Adjust the liftgate striker.

TAILGATE LATCH (G914095)

REMOVAL AND INSTALLATION

76.37.83	LATCH – OUTER – TAILGATE – EACH – RENEW	ALL DERIVATIVES	0.1	USED WITHINS	+

REMOVAL

1. Open the liftgate and tailgate.

2. 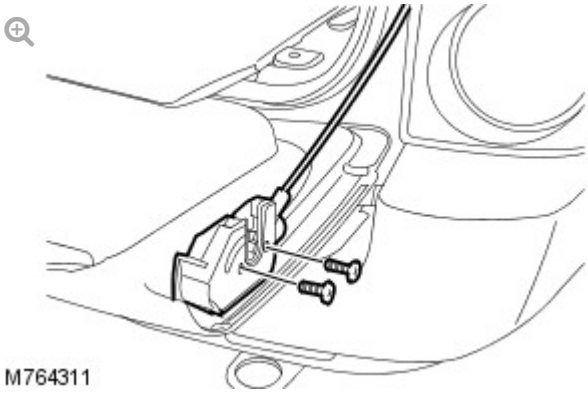

   Remove the tailgate latch assembly.

   - Remove the 2 screws.

INSTALLATION

1. Install the tailgate latch assembly.

   - Tighten to 25 Nm (18 lb.ft).

2012.0 RANGE ROVER (LM), 501-14

HANDLES, LOCKS, LATCHES AND ENTRY SYSTEMS

TAILGATE LATCH ACTUATOR

(G935634)

REMOVAL AND INSTALLATION

86.26.02	SOLENOID/MOTOR - LUGGAGE COMPARTMENT LID/TAILGATE/TAILDOOR - RENEW	ALL DERIVATIVES	0.2	USED WITHINS	+

REMOVAL

1. 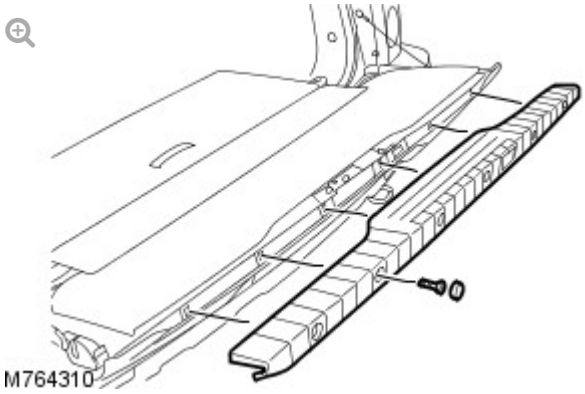

   Remove the tailgate upper trim panel.

   - Remove the 6 screw covers.
   - Remove the 6 screws.

2. Remove the tailgate latch assembly.
   For additional information, refer to: Tailgate Latch (501-14, Removal and Installation).

3. 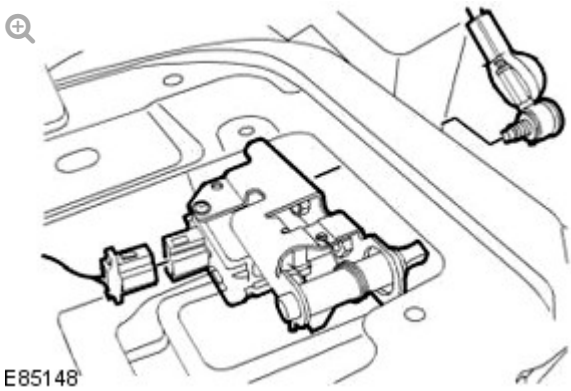

   Remove the tailgate latch actuator.

   - Release the access cover.
   - Disconnect the electrical connector.
   - Remove the bolt.

INSTALLATION

1. Install the tailgate latch actuator.
   - Tighten the bolt to 25 Nm (18 lb.ft).
   - Connect the electrical connector.
   - Secure the access cover.
2. Install the tailgate latch assembly.
   For additional information, refer to: Tailgate Latch (501-14, Removal and Installation).
3. Install the tailgate upper trim panel.
   - Install the screws.
   - Install the screw covers.

2012.0 RANGE ROVER (LM), 501-14

HANDLES, LOCKS, LATCHES AND ENTRY SYSTEMS

TAILGATE RELEASE SWITCH

(G935650)

REMOVAL AND INSTALLATION

86.26.26	SWITCH - LUGGAGE COMPARTMENT LID/TAILGATE RELEASE - RENEW	ALL DERIVATIVES	0.2	USED WITHINS	+

REMOVAL

1.

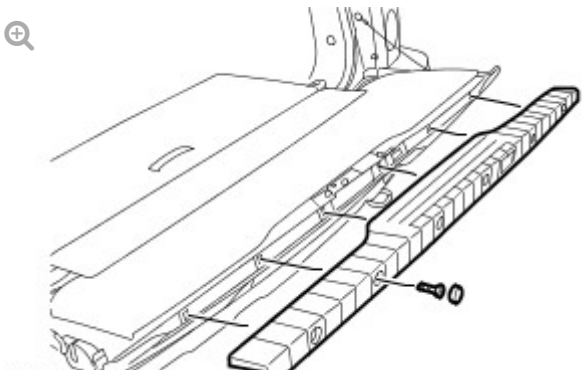

M764310

Remove the tailgate upper trim panel.

- Remove the 6 screw covers.
- Remove the 6 screws.

2.

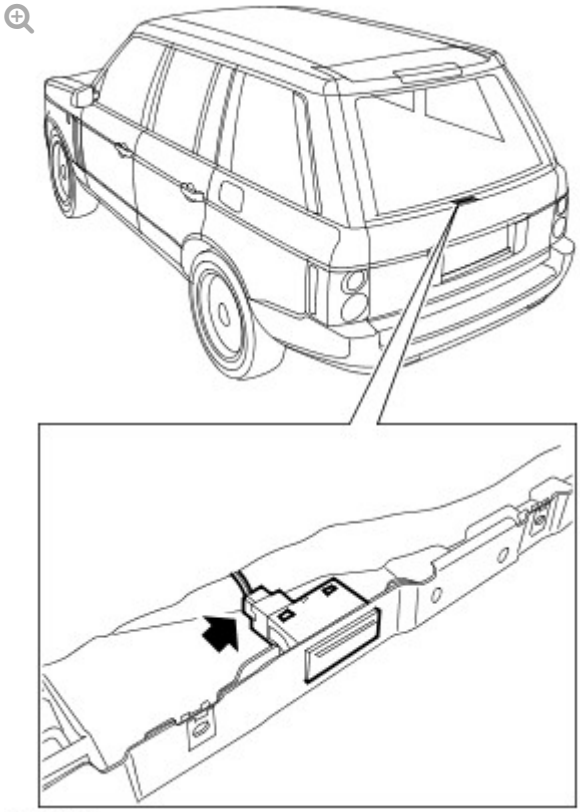

M865642

Remove the tailgate release switch.

- Disconnect the electrical connector.
- Release the clip.

INSTALLATION

1. Install the tailgate release switch.
   - Connect the electrical connector.
2. Install the tailgate upper trim panel.
   - Install the screws.
   - Install the screw covers.

WIPERS AND WASHERS

SPECIFICATIONS

Torque Specifications

DESCRIPTION	NM	LB-FT
Front wiper arms to linkage nut	34	25
Wiper linkage to front wiper motor:		
Nut	25	18
Bolts	10	7
Rear window wiper motor bolts	10	7
Rear wiper arm to motor nut	13	10
Washer reservoir to body bolts	3	2.2

2012.0 RANGE ROVER (LM), 501-16

WIPERS AND WASHERS

DESCRIPTION AND OPERATION

Wiper and Washer System Component Location

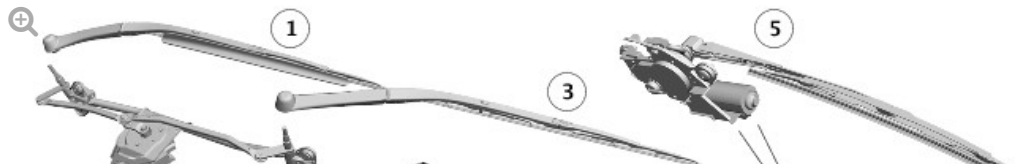

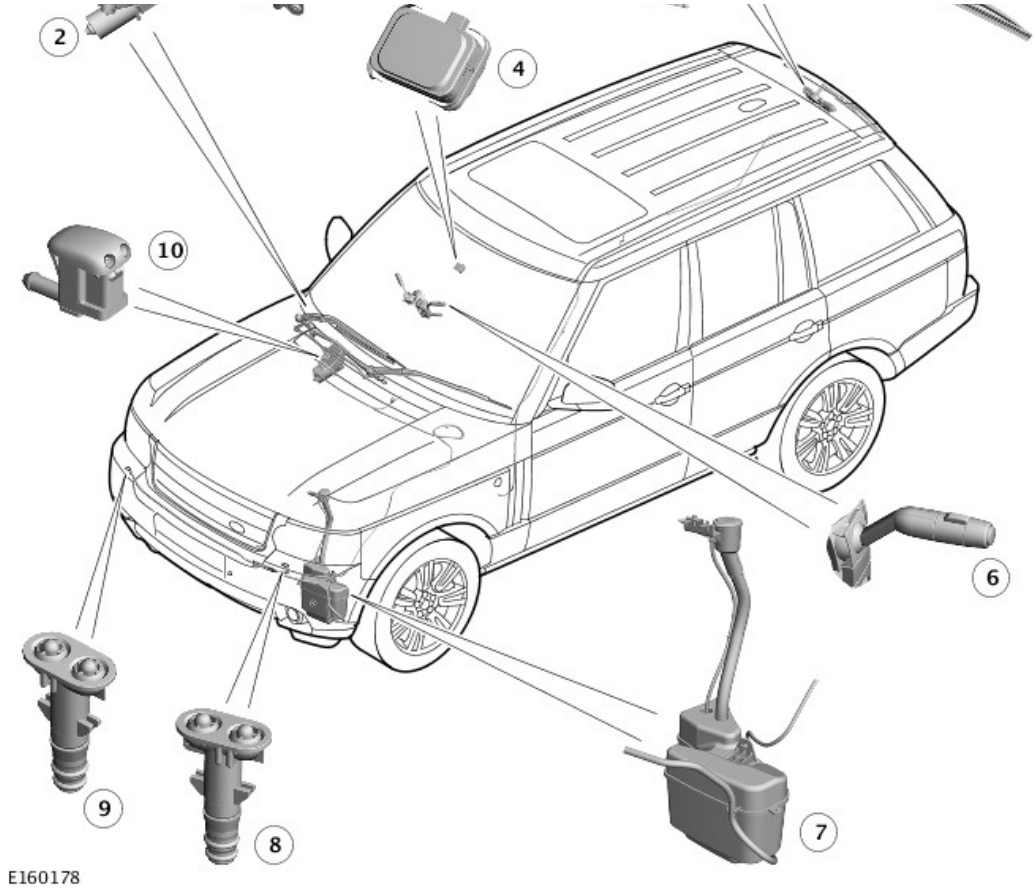

ITEM	DESCRIPTION
1	Wiper arm assembly RH
2	Wiper linkage and motor assembly
3	Wiper arm assembly LH
4	Rain/light sensor
5	Rear wiper, motor and control module assembly
6	Wiper control switch
7	Washer reservoir and pumps assembly
8	LH headlamp power wash jet
9	RH headlamp power wash jet
10	Heated front washer jet (2 off)

GENERAL

The wipers and washers system functions on receipt of requests made by the driver or the rain/light sensor. All wiper functions for the front and

tailgate wipers are controlled from a wiper control switch located on the right hand side of the steering column.

The wiper and washer system comprises:

- Front and tailgate wiper motors
- A windshield wiper linkage
- Two front and one tailgate wiper arms and blades
- Two front heated washer jets and one rear washer jet
- Two headlamp washer jets
- A windshield washer reservoir, a front/rear washer pump and a headlamp washer pump
- A wiper control switch
- A rain/light sensor

The wiper system is equipped with a rain/light sensor, which controls the automatic wiper functions and also the automatic lighting functions. The sensor, located below the interior rear view mirror, detects rain drops on the windscreen and automatically operates the wipers in the intermittent mode. The column stalk switch must be in the intermittent position for rain sensor controlled wiper operation.
For additional information, refer to: Exterior Lighting (417-01 Exterior Lighting, Description and Operation).

The windshield wiper system has 4 wiper stages of operation and 4 intermittent wiper delay periods. The 4 wiper stages are as follows:

- Flick wipe
- Intermittent
- Normal (slow) speed continuous
- Fast speed continuous

The intermittent, normal and fast speeds are affected by road speed. The intermittent wiper delay periods change with the road speed, with the delay decreasing as the road speed increases. The normal continuous operation changes to intermittent operation when the vehicle is stationary.

The wipers and washers operate with the ignition switch in positions I or II (aux or ign). Wiper functions are suspended during engine cranking to reduce battery power consumption under high load conditions.

Diagnostic information for the wiper system is available and can be retrieved using the Land Rover approved diagnostic system.

WIPER CONTROL COLUMN SWITCH

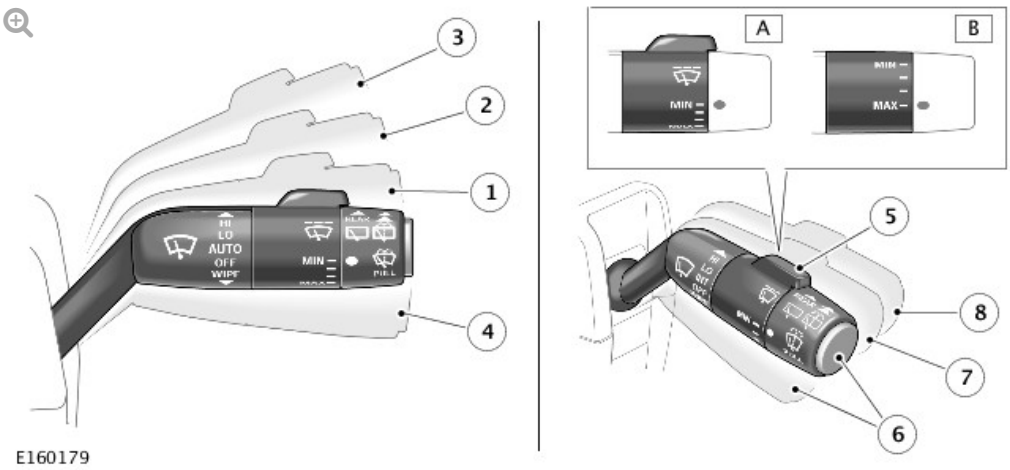

ITEM	DESCRIPTION
A	Rain sensor minimum sensitivity. Intermittent wipe maximum delay.
B	Rain sensor maximum sensitivity. Intermittent wipe minimum delay.
1	Rain sensor activated wipe or intermittent wipe (dependent on option fitted).
2	Low speed wipe.
3	High speed wipe.
4	Single wipe.
5	Intermittent variable delay/rain sensor sensitivity
6	Windscreen washers
7	Rear wipe
8	Rear wash/wipe

The wiper control switch is located on the right hand side of the steering column and controls all front and tailgate wiper functions.

Moving the switch up 1 position selects intermittent windshield wiper

Moving the switch up 1 position selects intermittent windshield wiper operation. The rotary potentiometer on the stalk selects 1 of 6 delay periods. When a rain/light sensor is incorporated into the system, the intermittent position also initiates wiper operation controlled by the rain/light sensor. The sensitivity of the rain/light sensor can be adjusted by rotating the rotary potentiometer to 1 of the 6 positions. Moving the switch up 1 further position selects normal (slow) continuous wiper operation. Moving the switch up to the last position selects fast continuous wiper operation.

Moving the switch down selects the flick wipe function. The windshield wipers will operate at normal speed for as long as the flick wipe switch position is operated and will stop at the park position when the switch is released.

Moving the switch rearwards, towards the driver, selects the front wash/wipe function. The washer pump will operate for as long as the switch is held. A short operation operates the pump momentarily and the wipers complete 3 full cycles before stopping. The headlamp washers will operate if programmed wash/wipe is selected and the headlamps are on. The power wash function can also be selected by depressing the button on the end of the stalk.

Rotating the outer ring of the wiper control switch to the first position selects the tailgate wiper intermittent mode on. Rotating the outer ring of the wiper control switch further on to the second position selects the tailgate wiper normal mode on. In intermittent mode, the tailgate wiper will complete 1 full cycle and will then operate on an intermittent function until selected off. The intermittent delay between wipes can be adjusted by selecting the wiper on, then off and then on again. Moving the switch forward to the second position selects the programmed rear wash/wipe function. The wiper completes 5 full cycles with 3 automatic, short operations of the rear washer pump. The tailgate wiper then operates in the tailgate wiper on mode until selected off.

The tailgate wiper also operates continuously if reverse gear is selected and the windshield wipers are on.

The wiper control switch comprises 8 switch positions and two intermittent rotary controls. The inner rotary control selects the intermittent delay

rotary controls. The inner rotary control selects the intermittent delay between wipes. The outer rotary control selects the tailgate wiper positions.

The switch positions each complete a combination of earth paths to 3 connections on the CJB (central junction box). The CJB interprets the selected combination of switches and operates the respective function accordingly.

WINDSHIELD WIPERS

The windshield wiper system comprises:

- Wiper motor and linkage assembly
- Washer reservoir and pumps
- Wiper arms and blades.

WIPER LINKAGE

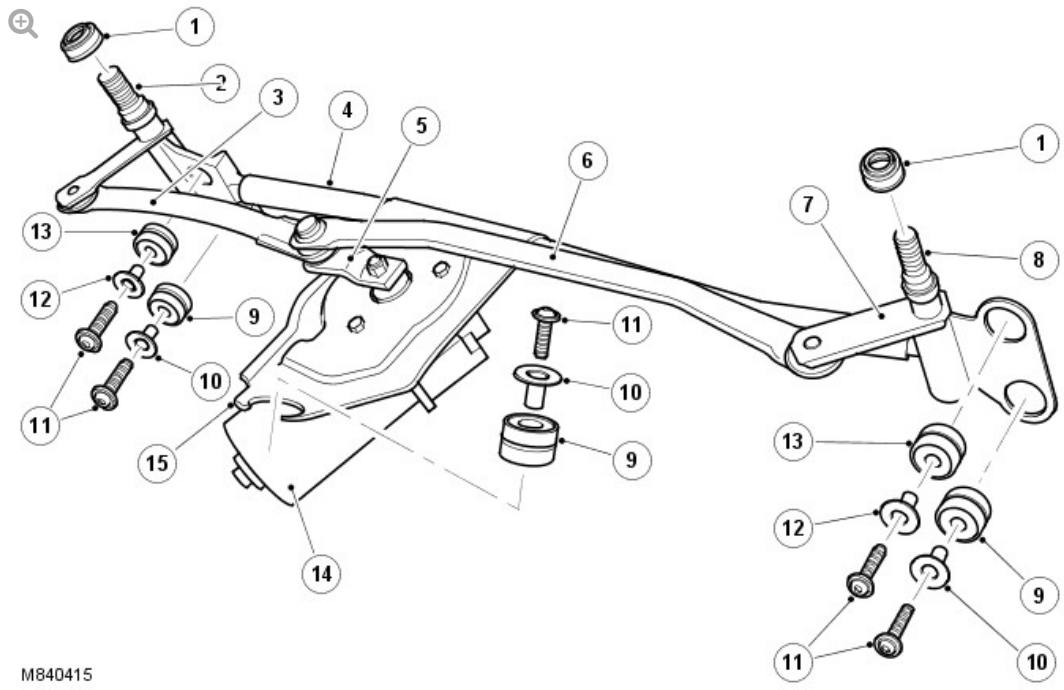

ITEM	DESCRIPTION
1	Wiper spindle cap (2 off)
2	RH pivot housing assembly
3	Link rod
4	Tube

5	Motor crank
6	Link rod
7	Crank
8	LH pivot housing assembly
9	Bush
10	Sleeve
11	Bolt
12	Sleeve
13	Bush
14	Motor assembly
15	Bracket

The wiper linkage and motor assembly are available as separate components. The wiper linkage differs between LH and RH drive models. The wiper motor is common to LH and RH drive models.

The assembly is located below the plenum grill in the engine compartment and is secured with bushes, sleeves and bolts. The rubber bushes isolate the assembly from the body mountings.

The linkage assembly comprises a main tube, with a pivot housing at each end. A bracket is attached, offset along the tube length, which locates the motor assembly. A motor crank is positively attached to the motor output shaft. A link rod is connected to the motor crank and is connected at the opposite end to the RH pivot housing, via a crank. The RH link rod has a pivot attachment for the LH link rod, which is connected at its opposite end to the RH pivot housing, via a second crank.

The motor crank converts rotary motion from the motor output shaft into linear movement of the link rods. The cranks, connected between the each link rod and pivot housing, convert the linear motion back to rotary motion of the pivot housing. This rotary motion is passed to the wiper arms and blades causing the blades to wipe an arc across the windscreen.

WIPER MOTOR

The motor assembly comprises a dc motor, which drives a gear wheel via a

The motor assembly comprises a dc motor, which drives a gear wheel via a worm drive attached to the motor spindle. The gear wheel has a central spigot, which provides the attachment point for the motor crank.

The motor is connected electrically by a four-pin connector. The connector supplies 2 battery voltage feeds to the motor. The motor has 3 sets of brushes with 1 brush connected to ground. One feed is direct to the motor brush opposite the ground brush and operates the motor at normal (slow) speed. The second feed is connected to a motor brush, which is offset from the ground brush and operates the motor at fast speed. With the power supplied through this brush, the current flows through fewer coil windings. This results in a lower resistance to the current flow to the ground brush and gives a higher motor rotational speed.

The motor has an internal track, which signals the CJB when the wipers have reached the park position. The park signal is an open circuit when the wipers are in the park position. When the wipers are switched off and the CJB receives the park position signal from the motor, the CJB shorts the motor via a relay bridge circuit. This short circuit has the effect of applying a brake to the motor, giving precise positioning of the wiper blades in the park position.

WIPER ARMS

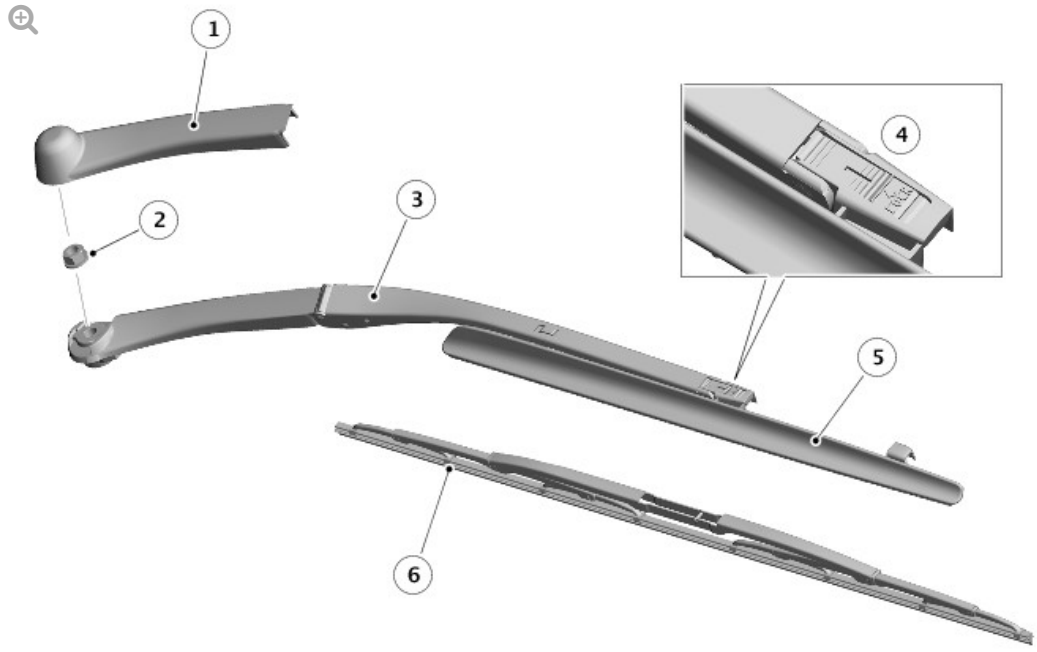

E160180

ITEM	DESCRIPTION

1	Spindle cap
2	Self locking nut
3	Wiper arm
4	Blade locking clip
5	Air deflector
6	Wiper blade

The wiper arms are positively located on tapered splines on the wiper linkage spindles. The arm is located on a curved wiper angle adjuster, which mates with the curved underside of the arm attachment. A curved slot in the arm attachment locates an adjustment shim and the 3 components are retained under compression on the spindle spline by a self-locking nut.

The wiper angle adjuster and the angle adjust shim allow the approach angle of the wiper blade to be finely adjusted to its optimum wiping angle. The adjustment allows the approach angle of the blade to be adjusted to 2° on each side of the spindle axis. This adjustment provides precise adjustment of the blade approach angle for maximum wiper performance. The wiper angle adjuster is pressed onto the spindle and requires a tool for removal. Once removed, the wiper angle adjuster must be discarded and new one fitted on re-assembly.

The wiper arm has a pivot point, midway between the spindle attachment and the blade. Two tension springs are connected to the wiper arm on each side of the pivot point and apply pressure to maintain the wiper blade in contact with the windscreen.

The wiper blades are attached to the wiper arms with clips that allow the blade to pivot. Each blade comprises a number of levers and yokes to which the rubber wiper blade is attached. The levers and yokes ensure that the pressure applied by the arm tension spring is distributed evenly along the full length of the blade and also allow the blade to adjust to the curvature and contour of the windscreen. The driver's side blade is fitted with an aerofoil, which presses the blade onto the windscreen at high speed, improving the wiper performance.

WASHER RESERVOIR AND PUMPS

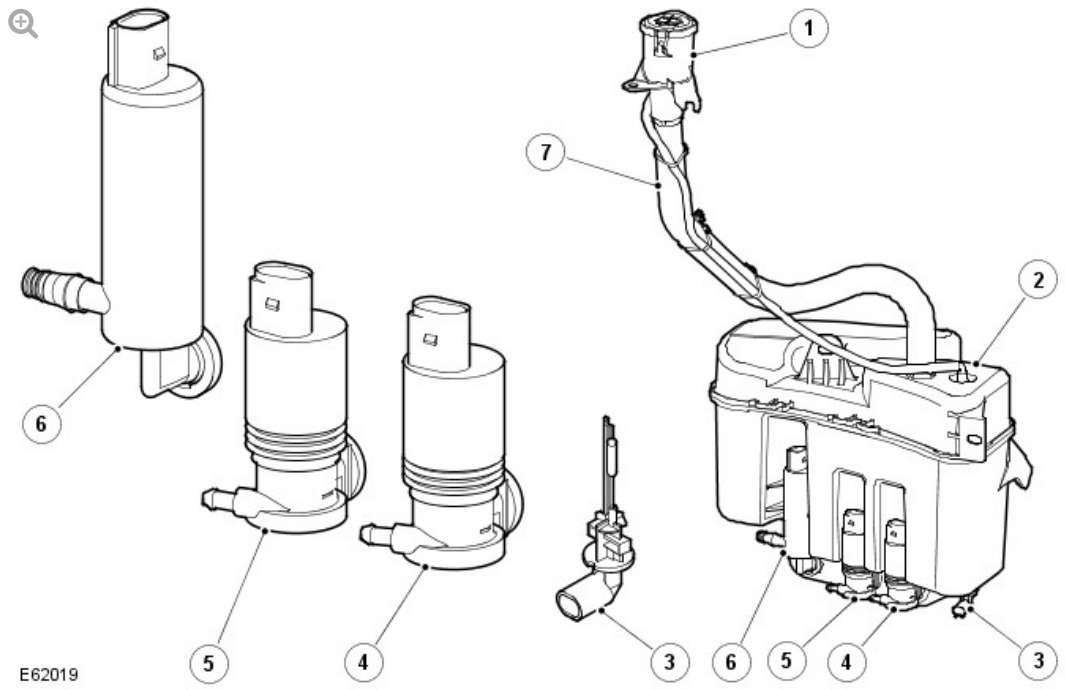

ITEM	DESCRIPTION
1	Filler cap
2	Reservoir
3	Fluid level sensor
4	Front washer pump
5	Headlamp power wash pump
6	Rear washer pump
7	Filler tube

The windscreen washer system comprises a reservoir, a washer pump, 2 washer jets and hoses.

The plastic, moulded reservoir is located in the LH wheel arch, behind the liner and has a capacity of 12.3 pints (7 litres). It is secured to the body and front panel with bolts and washers. A boss on the reservoir locates in a slot in the front panel and provides additional support.

The reservoir has 3 recessed holes on its rear face, which provide location for the front, rear and headlamp power washer pumps. The pumps are push fitted into grommets, which seal the pumps in their locations. A hole in the top of the reservoir allows for the fitment of a flexible filler tube. The hose is

top of the reservoir allows for the fitment of a flexible filler tube. The hose is routed into the left hand side of the engine compartment and is sealed with a rubber cap. A breather hose is fitted into an elbow on the top of the reservoir and is routed alongside the filler and secured in a clip near the filler cap in the engine compartment.

A hole in the base of the reservoir provides the location for the fluid level sensor. The hole provides access to an internal tube inside the reservoir, into which the sensor is fitted. The sensor has 2 pegs, which positively locate the sensor in the reservoir when turned through 90°.

The sensor reacts to the influence of a magnetic field. A float, with integral magnet, is located around the tube, inside the reservoir. The sensor has 2 contacts inside a glass tube, which are normally open. When the fluid level reduces, the magnetic float moves down the tube. When the magnet reaches the sensor contacts, the magnetic field closes the contacts. This completed circuit is sensed by the Light Control Module (LCM), which displays the low fluid level message in the instrument cluster.

HEATED WINDSCREEN WASHER JETS

Two windscreen washer jets are located in the rear trim panel on the bonnet outer surface. The washer fluid feed hose from the front screen pump is connected to a 'Y' piece connector located between the 2 jets. Two short lengths of hose connect the jets to the 'Y' piece. Each jet contains a Non-Return Valve (NRV) to prevent washer fluid draining back to the reservoir and also to limit the amount of washer fluid, which can be forced by gravity from the jet during cornering.

Each washer jet has 2 ball nozzles, which can rotate in their housings to obtain the optimum fluid application onto the windscreen. Each washer jet contains a heater element, which prevents the fluid freezing in the nozzles in very cold conditions. The jet heater elements are controlled by the ATC (automatic temperature control) system, which energises the heater elements when the ambient temperature falls below a predetermined temperature.

WIPER BLADE HEATING

The lower, black, portion of the windscreen contains 6 heating elements, which run from one side of the screen to the other. These elements are designed to heat the area of the windscreen where the wiper blades rest to

designed to heat the area of the windscreen where the wiper blades rest to prevent freezing in cold conditions.

The blade heating elements are controlled by the ATC system, which energises the blade heating elements when the ambient temperature falls below a predetermined temperature. The operation of the blade heating elements is activated simultaneously with the heated washer jets.

RAIN/LIGHT SENSOR

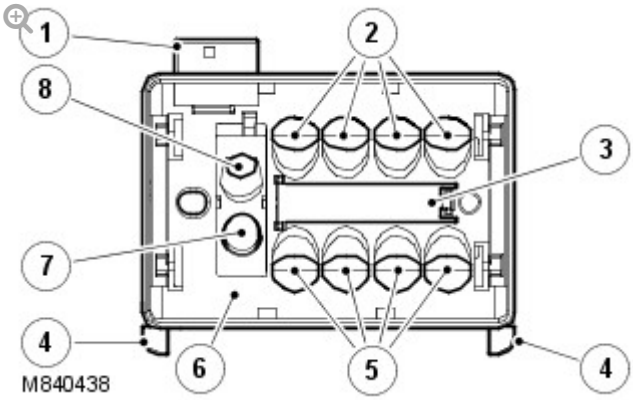

ITEM	DESCRIPTION
1	Connector
2	Receiver diodes
3	Heater element
4	Retaining clip
5	Transmitter diodes
6	Rain/light sensor body
7	Ambient light sensor
8	Forward light sensor

The rain/light sensor is located at the upper edge of the windshield, behind the interior rear view mirror. The sensor is mounted on an optical unit which is heat bonded to the inner surface of the windscreen during manufacture. If damage occurs to the optical unit or the windshield, then a new windscreen will be required and fitment can only be performed by an authorized Land Rover dealer.

The rain/light sensor unit attaches to the optical unit via 4 clips which latch onto formed tags on the optical unit. Positive retention is achieved by 2 retaining clips which force the clips onto the tags. The retaining clips must be withdrawn to facilitate sensor removal.

The sensor provides information to the CJB, via the LIN (local interconnect network) bus, for the optimum wiper operation for the prevailing conditions to maintain the screen in a clear condition at all times. The rain/light sensor is an optical unit, which operates on an infrared waveband. The sensor uses the principle of the laws of reflection on interfacing surfaces between materials with differing refraction indices.

The sensor contains 4 transmitter and receiver diodes for increased sensitivity and also contains a light sensor for operation of the automatic headlamp function.
For additional information, refer to: Exterior Lighting (417-01 Exterior Lighting, Description and Operation).

Rain/light Sensor Functionality

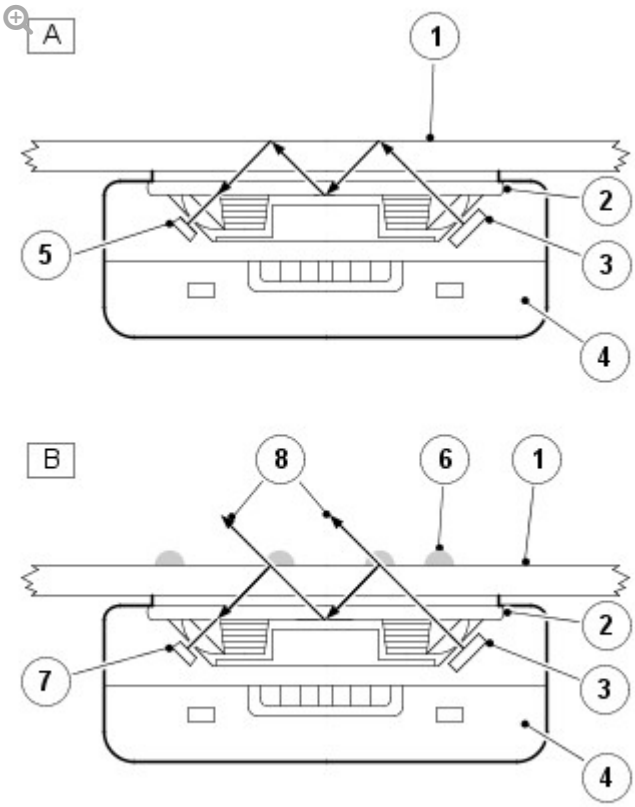

M840421

ITEM	DESCRIPTION
1	Windscreen - Outside surface
2	Optical unit
3	Transmitter diodes (100% light transmitted)
4	Rain/light sensor unit
5	Receiver diodes (100% received)
6	Water droplets/film
7	Receiver diodes (less than 100% light received)
8	Lost light

The rain/light sensor contains transmitter and receiver diodes, which transmit and receive infrared light, which is directed onto the windscreen via an optical unit. The light is directed at an angle so that the light is reflected 100% on the outside surface of the screen and is transmitted back into the optical unit. To receive a 100% reflection, the outer screen surface must be clean and dry.

The light is reflected 4 times from when it leaves the transmitter diodes to when it is picked up by the receiver diodes. If the windscreen is wet or dirty in the area of the optical unit, the clean conditions for 100% reflection means that some of the light reflected is lost. As the screen becomes dirtier or wetter, the received light is evaluated by the rain/light sensor and translated into a signal value. A micro-controller within the sensor monitors the change in signal and initiates the appropriate wipe cycle via LIN bus signals to the CJB.

The software can compensate for the long-term effects of scratches and stone chips in the area of the optical unit and the short term effects of dirt or smears caused by worn wiper blades. A heater element is also contained within the rain/light sensor and uses ambient temperature LIN bus signals from the IC to keep the optical unit clear of frost or condensation..

rain/light sensor incorporates a light guide. The light guide directs the ambient light and a proportion of the forward light (from the driving direction) to a light sensitive diode. This is used for the rain sensor sensitivity

in low ambient light levels and is also used to control the automatic headlamp function.
For additional information, refer to: Exterior Lighting (417-01 Exterior Lighting, Description and Operation).

Intermittent (single wipe), continuous slow, and continuous fast front wiper operations are controlled by the rain/light sensor when enabled.

TAILGATE WIPER

The tailgate wiper system comprises:

- Wiper motor and control module assembly
- Rear washer pump
- Wiper arm and blade.

TAILGATE WIPER ASSEMBLY

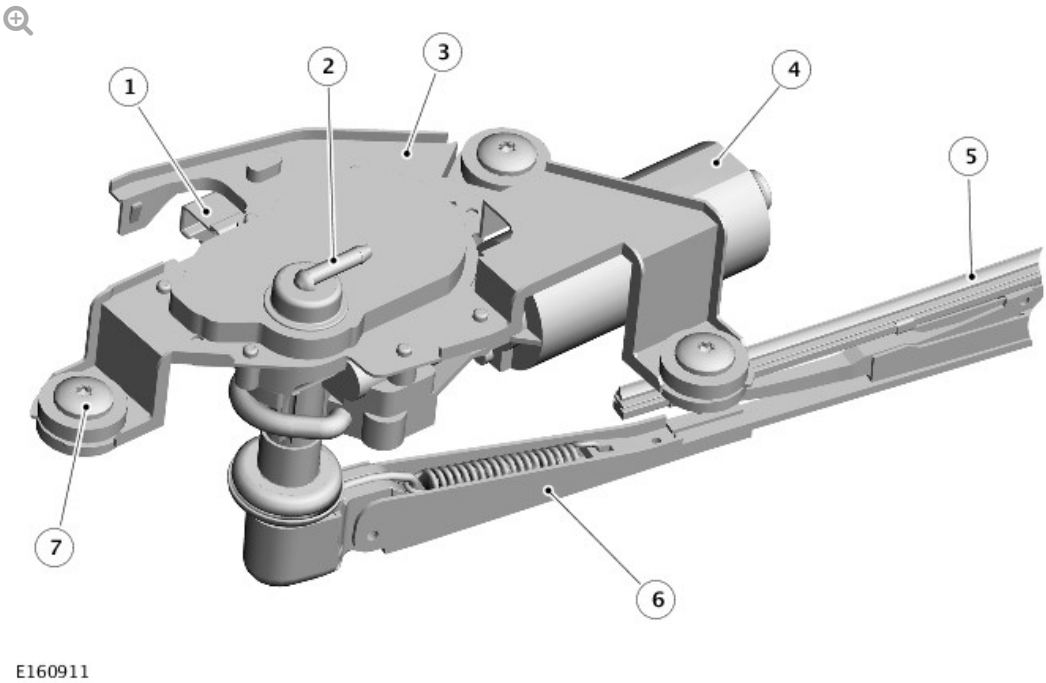

ITEM	DESCRIPTION
1	Harness connector
2	Washer fluid hose connection
3	Mounting bracket
4	Motor

5	Wiper blade
6	Wiper arm
7	Torx head screw (3 off)

The rear wiper and washer operation is controlled by a control module, which is located with the rear wiper motor. The rear wiper operation is remote from the CJB control of the front wiper systems.

The rear wiper motor and control module assembly is located in the upper tail door, behind a trim panel. The assembly is secured to a bracket on the upper tail door with 3, Torx head screws. Rubber bushes isolate the motor assembly from the bracket, which help reduce the transmission of motor operating noise to the tail door.

The assembly comprises the motor, mounting bracket and control module. The motor is located on a worm drive gearbox mechanism, which converts the rotary motion of the motor output spindle into the required arc for the rear wiper blade. The control module is integral with the motor and has 2 plug sockets, which accept 2 multiplugs from the harness. One multiplug has 2.5 mm diameter wires. Two of the wires supply permanent battery feed and ground connections for the motor and control module. The third wire in this plug supplies a power supply to the rear washer pump. The second multiplug has 0.35 mm diameter wires and carries signal data from the wash/wipe control stalk switch and the LCM. There is also a power input from the CJB.

The rear washer feed hose is located at the rear of the motor spindle. The hose is connected to a 90° connector allowing the washer fluid to flow through the centre of the motor spindle. An NRV is located in the hose, near the motor, and prevents fluid returning to the reservoir.

The motor spindle is a conventional design with a taper spline location for the wiper arm and a threaded shank to secure the arm to the spindle.

TAILGATE WIPER

The wiper arm is similar in design to the front wiper arms. The arm attachment hole has tapered splines, which mate with the splines on the wiper spindle. The arm is secured to the wiper motor spindle with a spring

wiper spindle. The arm is secured to the wiper motor spindle with a spring washer and nut. The wiper arm has a pivot point, close to the spindle attachment. A tension spring is connected to the wiper arm on each side of the pivot point and applies pressure to maintain the wiper blade in contact with the windscreen.

The wiper blade is attached to the wiper arm with a clip that allows the blade to pivot. The blade comprises a number of levers and yokes to which the rubber wiper blade is attached. The levers and yokes ensure that the pressure applied by the arm tension spring is distributed evenly along the full length of the blade and also allow the blade to adjust to the curvature and contour of the windscreen.

A plastic cap located on the arm pivot point, covers the spindle attachment nut. The cap also contains 2, adjustable ball jets, which direct washer fluid onto the tail door window. The cap, when installed, connects with the hollow motor spindle, through which the washer fluid flows to the jets.

HEADLAMP POWER WASH

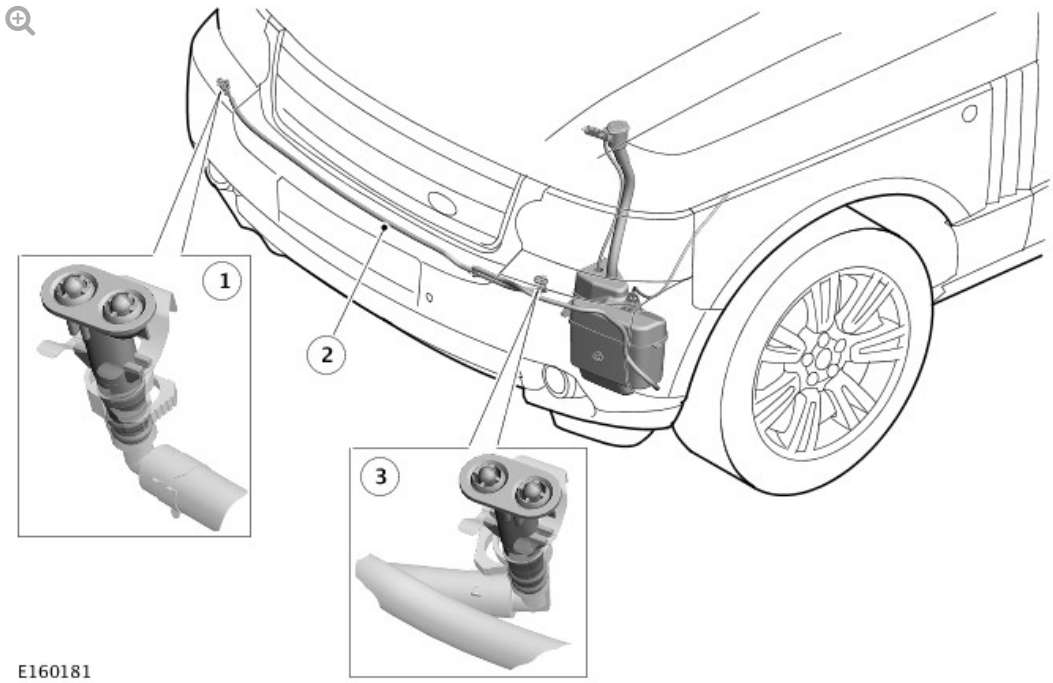

ITEM	DESCRIPTION
1	RH headlamp power wash jet
2	Hose

3	LH headlamp power wash jet

A power wash jet for each headlamp is located in a housing on the top surface of the front bumper. The jets are fed with fluid at high pressure from the headlamp power wash pump. A large diameter hose connects each jet to the pump. Each connection is secured with a metal clip to secure the hose due to the high pressure from the pump. Each jet directs the high-pressure fluid in a wide spray onto the headlamp lens.

OPERATION – FRONT WIPERS

The front wiper system has the following functionality:

- Intermittent wipe and delay adjustment or rain/light sensor (if fitted)
- Normal (slow) speed wipe
- Fast speed wipe
- Programme wash/wipe
- Flick wipe
- Headlamp power wash
- Motor blocking protection.

INTERMITTENT

Intermittent wiper operation is selected on the wiper control switch by moving the switch vertically to the first position. The intermittent delay period is adjustable using the rotary switch on the wiper control switch. The delay period is also subject to vehicle speed, with the selected delay period decreasing with an increase in road speed.

The rotary potentiometer selects differing resistance values for each position. The potentiometer is connected into a voltage divider circuit, with a 6.8kohm resistor. The power supply to the voltage divider circuit is limited to 6.5V. This reduced voltage is used to determine the position of the rotary switch as follows:

ROTARY SWITCH POSITION	RESISTANCE	MIN. VOLTAGE	MAX. VOLTAGE	TYPICAL VOLTAGE

Error - Ground	<0.2kohm	-	-	<0.18V
1	2kohm ± 750ohm	1.00V	1.89V	1.48V
2	4kohm ± 750ohm	2.08V	2.70V	2.41V
3	6kohm ± 750ohm	2.80V	3.27V	3.04V
4	8kohm ± 750ohm	3.32V	3.69V	3.51V
Error - Positive	>20kohm	-	-	4.88V

The intermittent delay is also influenced by the road speed of the vehicle using a signal value derived from the Anti-Lock Brake System (ABS) control module on the high speed CAN (controller area network) bus. The time delay periods for the vehicle stationary and when moving at different speeds are shown in seconds in the following table:

ROTARY SWITCH POSITION	VEHICLE SPEED MPH (KM/H)						
	4 (6)	4 - 19 (6 - 30)	19 - 44 (30 - 70)	44 - 62 (70 - 100)	62 - 87 (100 - 140)	>87 (140)	>112 (180)
Error - Ground	20	6	5	4	3	3	3
1	26	19	17	15	15	13	13
2	17	12	11	10	9	7	7
3	10	6	6	5	4	3	3
4	5	3	3	2	2	2	2
Error - Positive	8	6	5	4	3	3	3

The wiper control switch positions also influence the operation of the rain/light sensor by adjusting its sensitivity. Refer to the following rain/light sensor operation section for details.

NORMAL (SLOW) SPEED

The normal (slow) speed continuous wiper operation is selected by moving the switch vertically to the second detente position. The wipers will operate continuously when the vehicle is moving. When the vehicle is stationary (less than 4 mph (6 km/h)), the CJB operates the wipers in the intermittent mode,

using a 3 second intermittent delay period..

FAST SPEED

The fast speed continuous wiper operation is selected by moving the switch vertically to the third detente position. The wipers will operate continuously at fast speed when the vehicle is moving. When the vehicle is stationary (less than 4 mph (6 km/h)), the CJB operates the wipers in normal (slow) speed mode

RAIN/LIGHT SENSOR

The rain/light sensor is active when the wiper control switch is in the intermittent position. The rain/light sensor suspends wiper operation when the area of the windscreen for the rain/light sensor is dry and operates the wipers continuously (fast or slow speeds) when the windscreen is subject to heavy rainfall.

If the ignition is switched off and the wiper control switch remains in the intermittent position, the CJB will suspend rain/light sensor operation until intermittent operation is reselected, an adjustment of the rotary switch is made or programmed wash/wipe is selected.

The sensitivity of the rain/light sensor can be adjusted by the driver using the intermittent rotary switch on the wiper control switch. Six sensitivity levels of the sensor can be selected which has the effect of increasing or decreasing the wiper delay period, allow driver adjustment for the prevailing conditions. When several continuous wipe cycles have taken place, the sensor will maintain the continuous operation to avoid switching back to intermittent from a continuous wipe and back again.

The rain/light sensor receives vehicle speed information from the ABS (anti-lock brake system) control module on the high speed CAN bus every 2 seconds. The sensor increases the sensitivity as the speed increases to optimize wiper operation. When the vehicle speed is reduced to less than 5 mph (8 km/h), the sensitivity is automatically reduced. Below this speed the wipers will only operate continuously in very heavy rain.

WASH/WIPE

Moving either the wiper control switch backwards selects front wash/wipe. This position is non-latching and the windshield washer pump is operated

for as long as the switch is active. If the switch is only momentarily operated (less than 300 ms), only the washer pump operates. If the switch is activated for more than 300 ms, the CJB also powers the wiper motor after a 0.5 second delay. The CJB monitors the wash/wipe switch operation and after the switch is released, the CJB allows 3 full wipe cycles to clear the screen.

RESERVOIR LEVEL SENSOR

The sensor cannot determine the precise amount of fluid in the reservoir, but can detect when the fluid level has fallen below a certain point. When the fluid level is low, the magnetic float closes the sensor contacts, completing a circuit through the sensor. This completed circuit is sensed by the CJB to which the sensor is directly connected.

The fluid level sensor is monitored continuously by the CJB. The CJB checks the fluid level sensor when the ignition is switched on to give the driver an early warning of the low fluid level. The CJB then monitors the sensor value over a 25 second period when the ignition is on to prevent invalid messages due to fluid 'sloshing' in the reservoir.

When the CJB determines a low fluid level, a signal is transmitted on the high speed CAN bus to the IC to illuminate the 'WASHER FLUID LOW' message in the IC message center. The first illumination of this message is accompanied by a 'gong' sound to alert the driver to the low fluid level.

HEATED WINDSCREEN WASHER JETS

The heated washer jets are controlled by the ATC system and a heated washer jet relay in the CJB.

When the ignition is switched on and the ATC system detects an ambient temperature of less than 3°C (37°F), the ATC system completes an earth path for the coil of the heated washer jet relay. This allows battery voltage to pass through the relay contacts and operate the heater elements. The ATC maintains the power to the heater elements for as long as the ignition remains on or the ambient temperature remains below 6°C (42°F). If the ambient temperature increases to 6°C (42°F) or above, the ATC system removes the earth for the relay coil, de-energizing the heater elements.

The ATC system will also prevent heated washer jet operation if the battery voltage falls to below 11.4V. This is to relieve loads on the battery and

alternator when electrical loads are high. Heated washer jet operation will be resumed when the battery voltage exceeds 12.2V.

WIPER MOTOR BLOCKING PROTECTION

The wiper park signal is also used by the CJB for blocking protection of the windshield wiper motor. This feature protects the motor in the event of the wiper operation being obstructed.

If the CJB does not receive the wiper park signal for a period of 16 seconds, when the wiper motor is active, the CJB removes the power supply to the motor. The motor is disabled for a period of 3 minutes or until the ignition is switched off and on again. Even after the 3 minute period has elapsed, the CJB will not automatically switch the motor on, to prevent the risk of injury. The wiper switch must be moved off and then on to reactivate the wiper motor. The blocking protection is active in all wiper switch positions and can only be reset by turning the ignition off.

OPERATION – REAR WIPER

The rear wiper has the following functionality:

- Intermittent operation
- Adjustable intermittent wipe period
- Continuous reverse wipe function.

WIPER OPERATION

The tailgate wiper is operated by the wiper control switch. Rotating the outer ring of the switch the first position switches on the tailgate wiper intermittent mode. Rotating the switch forward to the second position switches on the tailgate wiper normal mode. Pressing the switch end selects the rear wash/wipe function.

When reverse gear is engaged and the tailgate wiper is on, the tailgate wiper is operated continuously. The continuous wipe will continue until reverse gear is disengaged or the tailgate wiper is switched off.

When rear wash/wipe is selected, the EJB (engine junction box) powers the washer pump for as long as the switch is held. When the switch is released,

the EJB initiates 5 complete wipe cycles. The first 3 wipe cycles are each accompanied by a 0.5 second operation of the rear washer pump. The final 2 cycles are to clear the tail door window and do not have a washer pump operation. If intermittent remains selected, the tailgate wiper continues in intermittent mode.

INTERMITTENT ADJUSTMENT

The intermittent interval time of the tailgate wiper can be adjusted by the driver to wipe at between 1 and 30 second delays. Adjustment is performed by switching the tailgate wiper on for a short time and then off again. The next switching on of the tailgate wiper determines the delay period. The time lapse between the off and the next on signal is sensed by the CJB which sets this period as the requested time interval between wipes. If the next on signal is more than 30 seconds after the off signal, the CJB sets the time interval to the maximum 30 seconds.

REAR WIPER MOTOR BLOCKING PROTECTION

The tailgate wiper motor is protected by the CJB in the event of the wiper operation being obstructed.

HEADLAMP WASHER

The headlamp washers are only active when the headlamps are switched on and the ignition is on. The washers are controlled by the CJB, which limits their operation to preserve washer fluid in the reservoir.

With the ignition and lights on, the headlamp wash is activated on the first operation of the wiper control switch in the wash/wipe position. The CJB then suspends headlamp wash activation for the next 4 operations of the wash/wipe switch, with the headlamp power washers activated on the fifth operation of the switch.

The CJB monitors the operation of the wash/wipe switch and maintains a counter to restrict headlamp power wash operation to every fifth operation of the wash/wipe switch. The CJB also maintains a timer, which prevents a second operation of the headlamp wash within a 3 minute period. The counter and timer are reset when the ignition is switched off.

When headlamp power wash is active, the CJB energizes the wash pump

twice per cycle. The headlamp wash pump is powered for a 0.5 second period. The CJB then initiates a 2 second delay before powering the headlamp wash pump for a second 0.5 second period.

If the washer fluid level becomes low, the CJB suspends headlamp power wash operation to preserve the remaining washer fluid.

WIPERS AND WASHERS CONTROL DIAGRAM

NOTE:

A = Hardwired; B = K bus; C = Diagnostic DS2 bus; K = I bus

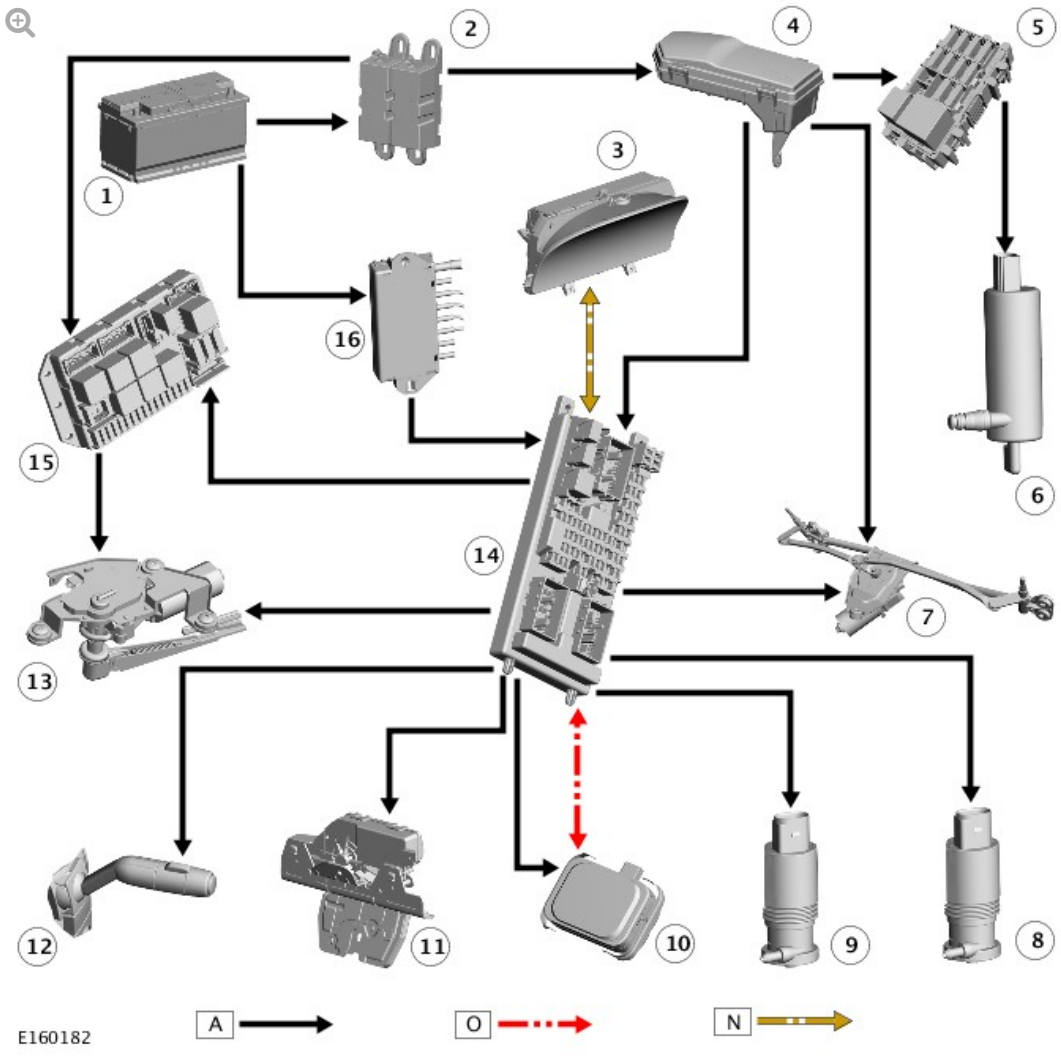

ITEM	DESCRIPTION

1	Battery
2	BJB2
3	Instrument cluster
4	EJB
5	Auxiliary junction box
6	Power wash pump
7	Front wiper motor
8	Front washer motor
9	Rear washer motor
10	Rain/light sensor
11	Tailgate ajar switch
12	Wiper control switch
13	Rear wiper motor
14	CJB
15	RJB

2012.0 RANGE ROVER (LM), 501-16

WIPERS AND WASHERS

DIAGNOSIS AND TESTING

PRINCIPLE OF OPERATION

For a detailed description of the wipers and washers systems and operation, refer to the relevant Description and OPeration section of the workshop manual. REFER to: Wipers and Washers (501-16 Wipers and Washers, Description and Operation).

INSPECTION AND VERIFICATION

CAUTION:

Diagnosis by substitution from a donor vehicle is **NOT** acceptable. Substitution of control modules does not guarantee confirmation of a fault and may also cause additional faults in the vehicle being checked and/or the donor vehicle.

NOTE:

Check and rectify basic faults before beginning diagnostic routines involving pinpoint tests.

1. Verify the customer concern.

1. Visually inspect for obvious signs of mechanical or electrical damage.

Visual Inspection

MECHANICAL	ELECTRICAL
▪ Windshield and rear window for damage or contamination e.g. road film or general residue deposits ▪ Wiper blades, arms and linkage for wear, security, damage and freedom of movement ▪ Windshield/Rear window/Headlamp washer fluid level ▪ Washer pipes and jets for leaks, restrictions and damage ▪ Wipers and washers control switch, damage and freedom of movement	▪ Battery condition and state of charge ▪ Fusible links ▪ Fuses ▪ Relays ▪ Electrical connections ▪ Front and rear wiper motors ▪ Wiper switch ▪ Washer pumps ▪ Rain/light sensor ▪ Heated front washer jets ▪ Ignition switch ▪ Light switch ▪ Ambient air temperature sensor ▪ Central Junction Box (CJB) ▪ Battery Junction Box (BJB) ▪ Anti-Lock Braking System (ABS) module ▪ Automatic Temperature Control Module (ATCM) ▪ Instrument Cluster (IPC) module ▪ Controller Area Network (CAN) circuits

1. If an obvious cause for an observed or reported concern is found, correct the cause (if possible) before proceeding to the next step

1. If the cause is not visually evident, verify the symptom and refer to the Symptom Chart, alternatively check for Diagnostic Trouble Codes (DTCs) and refer to the DTC Index.

SYMPTOM CHART

SYMPTOM	POSSIBLE CAUSES	ACTION
Wipers and washers inoperative	▪ Washers inoperative ▪ Wiper arm(s) incorrectly installed/aligned ▪ Steering column right multifunction switch internal failure ▪ Wipers and washers control switch circuit short circuit to ground, short circuit to power, open circuit, high resistance	▪ Listen for washer motor operation. Check and top up washer fluid level. Check and rectify blocked washer circuit. Check for DTCs indicating a wiper/washer circuit fault. Rectify as necessary ▪ Check the installation/alignment of the wiper arms. Ensure motor/mechanism is not jammed or seized ▪ Check if the wipers and washers control switch retaining screws are tightened according to specifications. Inappropriately tightened screws might cause steering wheel module failure ▪ Refer to the electrical circuit diagrams and check the wipers and washers control switch circuit for short circuit to ground, short circuit to power, open circuit, high resistance
Wiper blade(s) drag/judder across the windshield/rear window	▪ Contamination of the windshield/rear window ▪ Incorrectly installed wiper arm(s) ▪ Wiper arm(s) incorrectly aligned to the screen ▪ Wiper arm(s) spring tension inadequate	Clean the windshield/rear window. Check for the correct installation and tension of the wiper arm(s). Refer to the relevant section of the workshop manual. Rectify as necessary.

	inadequate	
Very slow operation of the wiper(s) across the windshield/rear window	▪ Low battery voltage ▪ Front wiper linkage seized or fouling ▪ Wiper circuit fault ▪ Wiper switch fault, high resistance	Check the battery condition and state of charge. Check the wiper linkage for fouling. Disconnect the motor from the linkage. Refer to the relevant section of the workshop manual. Check the linkage operation. Check for DTCs indicating a wiper circuit fault. Rectify as necessary.
Wiper(s) inoperative		
Noisy operation of wiper(s)	▪ Wiper motor/linkage fault	Lift the wiper arm(s) from the windshield/rear window and recheck the noise level during the wiper sweep operation.
Noisy operation of washers	▪ Washer motor(s) faulty ▪ Washer system blocked or partially blocked	Listen for washer motor operation. Check and top up washer fluid level. Check and rectify blocked washer circuit. Check the wiper/washer circuit for DTCs indicating a fault. Rectify as necessary.
Washers do not operate	▪ Fluid level low ▪ Washer circuit blocked ▪ Washer circuit faulty	

DTC INDEX

For a list of Diagnostic Trouble Codes (DTCs) that could be logged on this vehicle, please refer to Section 100-00. REFER to: Diagnostic Trouble Code (DTC) Index - DTC: Module Name: Central Junction Box (100-00 General Information, Description and Operation).

RAIN SENSOR (G914096)

REMOVAL AND INSTALLATION

84.12.11	SENSOR – RAIN – RENEW	ALL DERIVATIVES	0.1	USED WITHINS	+

REMOVAL

NOTE:

Make sure the ignition is OFF at all times during the replacement procedure.

1. Remove the interior rear view mirror.
   For additional information, refer to: Interior Rear View Mirror (501-09 Rear View Mirrors, Removal and Installation).

2. 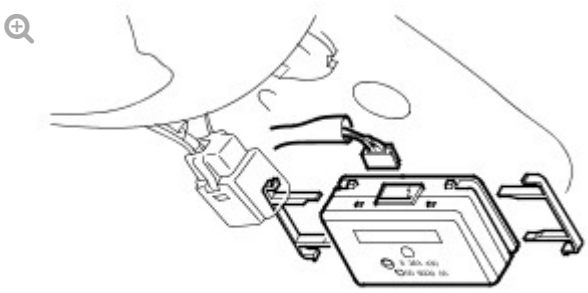

   M840431

   Remove the rain sensor.

   - Release the 2 clips.

INSTALLATION

1.

NOTES:

- Make sure the rain/light sensor windshield area is clear and clean of any contamination inside and out.
- Prior to switch the ignition ON first time after the rain/light sensor replacement please allow at least 10 minutes for the gel pad to adhere to the windshield surface.

Install the rain sensor.

- Secure with the clips.

2.

NOTE:

If the original rain/light sensor is to be reinstalled, configure and calibrate using Land Rover approved diagnostic equipment.

Install the interior rear view mirror.
For additional information, refer to: Interior Rear View Mirror (501-09 Rear View Mirrors, Removal and Installation).

2012.0 RANGE ROVER (LM), 501-16

WIPERS AND WASHERS

REAR WINDOW WIPER MOTOR (G913589)

REMOVAL AND INSTALLATION

84.35.12	MOTOR – WIPER – RENEW	ALL DERIVATIVES	0.4	USED WITHINS	+

REMOVAL

1. Remove the rear window wiper pivot arm.
   For additional information, refer to: Rear Window Wiper Pivot Arm (501-16, Removal and Installation).

2. 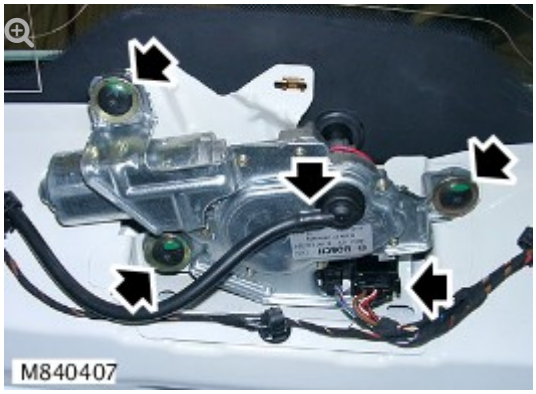

   Disconnect the rear window washer hose from the rear window wiper motor.

3. Disconnect the 2 electrical connectors from the rear window wiper motor.

4. Remove the 3 bolts securing the rear window wiper motor to the liftgate.

5. Remove the rear window wiper motor from the liftgate window glass seal.

6. **NOTE:**

   > Do not disassemble further if the component is removed for access only.

   Remove the rear window wiper motor seal from the liftgate window

glass.

7. Remove the 3 compression limiters from the rear window wiper motor mountings.
   - Release and collect the 3 mountings from the rear window wiper motor.

INSTALLATION

1. Install the mountings and insert the compression limiters to the rear window wiper motor.
2. Install a new rear window wiper motor to the liftgate window glass seal.
3. Install the rear window wiper motor.
   - Tighten the bolts to 10 Nm (7 lb.ft).
4. Connect the electrical connectors to the rear window wiper motor.
5. Connect the rear window washer hose to the rear window wiper motor.
6. Install the rear window wiper pivot arm.
   For additional information, refer to: Rear Window Wiper Pivot Arm (501-16, Removal and Installation).

WIPERS AND WASHERS

REAR WINDOW WIPER PIVOT ARM (G913590)

REMOVAL AND INSTALLATION

84.15.02	ARM - WIPER - EACH - RENEW	ALL DERIVATIVES	0.1	USED WITHINS	+
84.35.01	ARM - WIPER - RENEW	ALL DERIVATIVES	0.2	USED WITHINS	+

REMOVAL

1. Remove the liftgate upper trim panel.

   For additional information, refer to: Liftgate Upper Trim Panel (501-

05, Removal and Installation).

2. 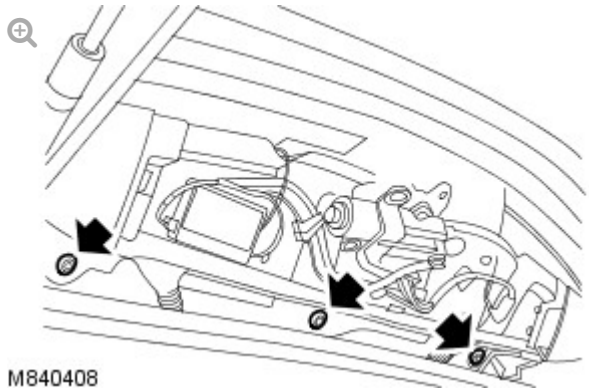

Remove the 3 bolts from the rear spoiler.

3. Close the liftgate.
   - Reposition the rear spoiler for access.

4. 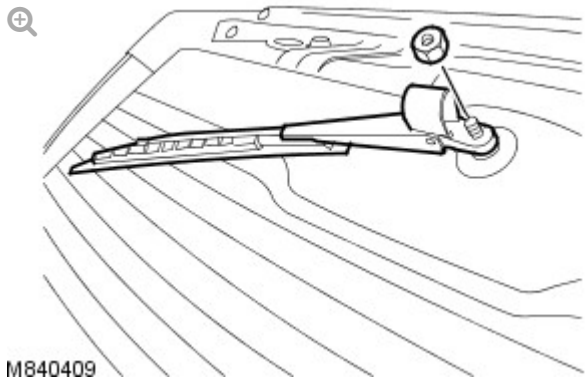

Remove the rear window wiper pivot arm.

- Raise the nut cover on the rear window wiper pivot arm and remove the nut.

INSTALLATION

1. Install the rear window wiper pivot arm.
   - Align the rear window wiper pivot arm to the liftgate window glass.
   - Tighten the nut to 13 Nm (10 lb.ft).
   - Close the rear window wiper pivot arm nut cover.

2. Open the liftgate.
   - Reposition the rear spoiler to the liftgate.
3. Install the bolts to the rear spoiler.
   - Tighten the bolts to 10 Nm (7 lb.ft).
4. Install the liftgate upper trim panel.
   For additional information, refer to: Liftgate Upper Trim Panel (501-05, Removal and Installation).

WINDSHIELD WASHER PUMP

(G916063)

REMOVAL AND INSTALLATION

84.10.21	PUMP - WASHER - RENEW	ALL DERIVATIVES	0.4	USED WITHINS	+

REMOVAL

1. Remove the front LH fender splash shield.
   For additional information, refer to: Fender Splash Shield (501-02, Removal and Installation).

2. Position a container to collect any windshield washer reservoir spillage.

3. 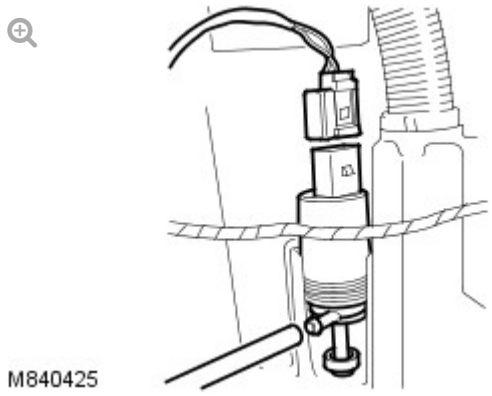

   Disconnect the windshield washer pump electrical connector.

   - Remove the windshield washer pump hose.

4. Remove the windshield washer pump.
   - Remove and discard the seal.

INSTALLATION

1. Install the windshield washer pump.
   - Clean the component mating faces.
   - Install a new seal.
2. Connect the electrical connector.
   - Connect the hose to the pump.
3. Fill the windshield washer reservoir with the correct fluid and concentration.
4. Install the front LH fender splash shield.
   For additional information, refer to: Fender Splash Shield (501-02, Removal and Installation).

2012.0 RANGE ROVER (LM), 501-16

WIPERS AND WASHERS

WINDSHIELD WASHER RESERVOIR (G913591)

REMOVAL AND INSTALLATION

84.10.03	RESERVOIR - COMBINED WINDSHIELD/HEADLAMP WASHERER - RENEW	ALL DERIVATIVES	0.6	USED WITHINS +

REMOVAL

1. Remove the front LH fender splash shield.
   For additional information, refer to: Fender Splash Shield (501-02, Removal and Installation).

2. 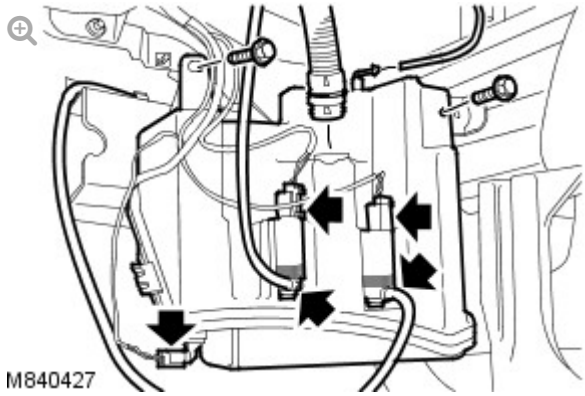

   Release the filler neck from the windshield washer reservoir.

   - Position a container to collect any windshield washer reservoir spillage.
   - Remove and discard the seal.

3. **NOTE:**

   Note the position of the electrical connectors.

   Disconnect the 3 electrical connectors from the windshield washer reservoir pumps.

4. **NOTE:**

   Note the position of the hoses.

Disconnect the 3 hoses from the windshield washer reservoir pumps.

5. Disconnect the low washer fluid warning indicator switch electrical connector.

6. Disconnect the windshield washer reservoir vent pipe.

7. Remove the windshield washer reservoir.
   1. Remove the 2 bolts.
   2. Release the windshield washer reservoir from the front mounting.

8. **NOTE:**

   Do not disassemble further if the component is removed for access only.

   Remove the 3 windshield washer reservoir pumps and discard the 3 seals.

INSTALLATION

1. Install the windshield washer reservoir pumps.
   - Clean the component mating faces.
   - Install new seals.

2. Install the windshield washer reservoir.
   - Tighten the bolts to 3 Nm (2.2 lb.ft).

3. Connect the windshield washer reservoir vent pipe.

4. Connect the low washer fluid warning indicator switch electrical

4. Connect the low washer fluid warning indicator switch electrical connector.

5. Connect the windshield washer reservoir electrical connectors.

6. Connect the windshield washer reservoir pump hoses.

7. Install the windshield washer reservoir filler neck.
   - Clean the component mating faces.
   - Install a new seal to the windshield washer filler neck.

8. Fill the windshield washer reservoir with the correct fluid and concentration.

9. Install the front LH fender splash shield.
   For additional information, refer to: Fender Splash Shield (501-02, Removal and Installation).

2012.0 RANGE ROVER (LM), 501-16

WIPERS AND WASHERS

WINDSHIELD WIPER INTERMITTENT WIPE RELAY

(G927762)

REMOVAL AND INSTALLATION

REMOVAL

1. Remove the battery.

2. 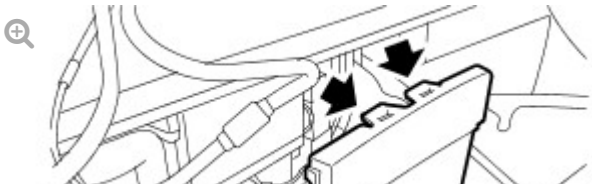

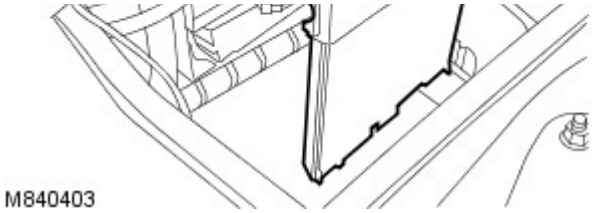

Remove the bulkhead access cover.

- Release the 2 clips.

3. 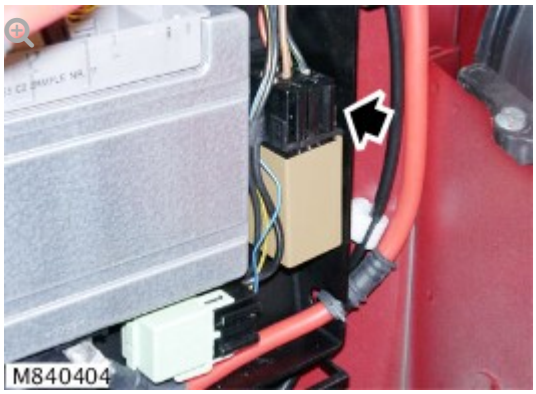

Disconnect the windshield wiper intermittent wipe relay.

INSTALLATION

1. Install the windshield wiper intermittent wipe relay.

2. Install the bulkhead access cover.

   - Secure the clips.

3. Install the battery.