2012.0 RANGE ROVER (LM), 417-01

EXTERIOR LIGHTING

HIGH MOUNTED STOPLAMP

(G927822)

REMOVAL AND INSTALLATION

86.41.32	LAMP ASSEMBLY - CENTRE HIGH MOUNTED STOP - RENEW	ALL DERIVATIVES	0.3	USED WITHINS	+

REMOVAL

1. Remove the rear spoiler.

2. 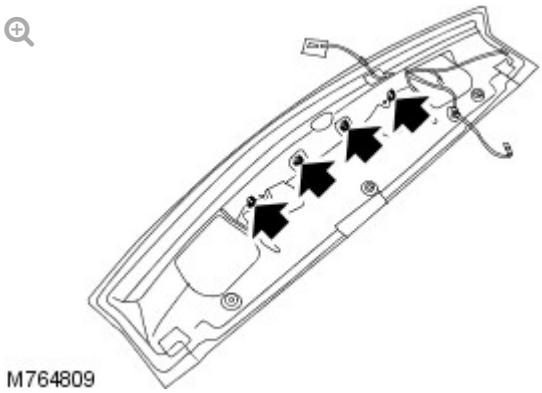

   Remove the high mounted stoplamp.

   - Remove the 4 screws.
   - Release the wiring harness.

INSTALLATION

1. Install the high mounted stoplamp.
   - Install the screws.
   - Secure the wiring harness.
2. Install the rear spoiler.

2012.0 RANGE ROVER (LM), 417-01

EXTERIOR LIGHTING

LAMP OUTAGE MODULE (G910475)

REMOVAL AND INSTALLATION

REMOVAL

1. Remove the RH cowl side trim panel.
   For additional information, refer to: Cowl Side Trim Panel (501-05, Removal and Installation).

2. Release the lamp outage module.
   - Remove the bolt.

3. Remove the lamp outage module.
   - Disconnect the 3 electrical connectors.

INSTALLATION

1. Install the lamp outage module.
   - Connect the electrical connectors.
   - Install the bolt.

2. Install the RH cowl side trim panel.
   For additional information, refer to: Cowl Side Trim Panel (501-05, Removal and Installation).

EXTERIOR LIGHTING

REAR LAMP ASSEMBLY (G1224359)

REMOVAL AND INSTALLATION

86.40.70	LAMP ASSEMBLY - TAIL - LEFT/EACH - RENEW	ALL DERIVATIVES	0.1	USED WITHINS	+

REMOVAL

NOTES:

- Removal steps in this procedure may contain installation details.
- The ignition must be switched off.

1.

CAUTIONS:

- Protect the surrounding paintwork to avoid damage.
- Take extra care not to damage the clips.

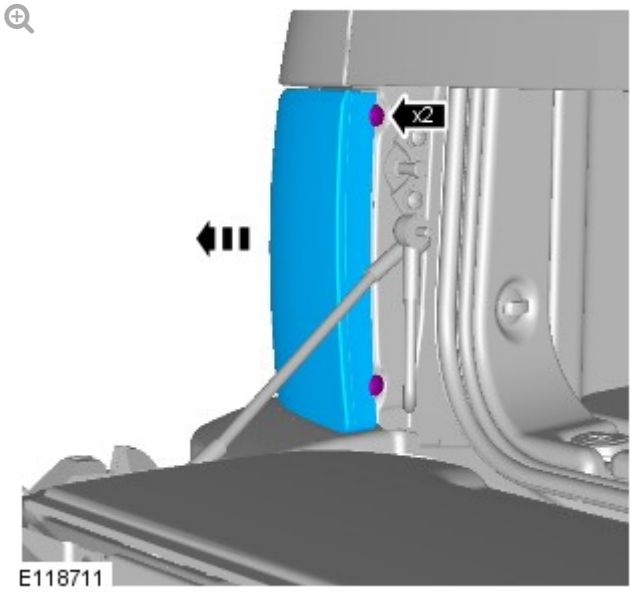

Torque: **2 Nm**

2.

CAUTION:

Take extra care not to damage the wiring harnesses.

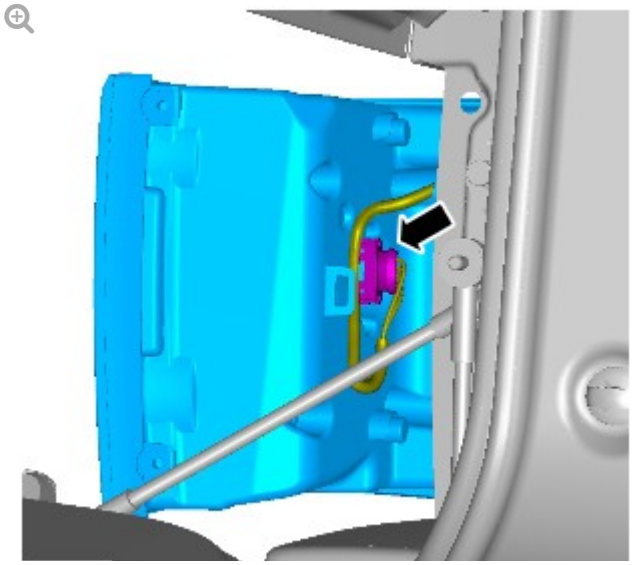

INSTALLATION

1. To install, reverse the removal procedure.

2012.0 RANGE ROVER (LM), 417-01

EXTERIOR LIGHTING

SIDE TURN SIGNAL LAMP

(G928177)

REMOVAL AND INSTALLATION

86.40.53	LAMP ASSEMBLY – TURN SIGNAL SIDE REPEATER – FRONT – RENEW	ALL DERIVATIVES	0.1	USED WITHINS	+

REMOVAL

1.

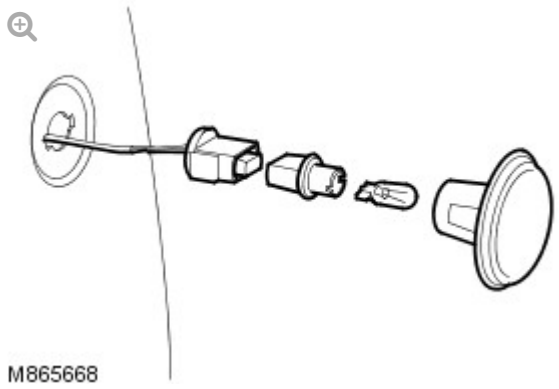

Remove the side turn signal lamp.

- Push the lamp forwards to release it from the fender.
- Disconnect the side turn signal lamp electrical connector.

2. **NOTE:**

> Do not disassemble further if the component is removed for access only.

Remove the bulb holder.

- Remove the bulb from the holder.

INSTALLATION

1. Install the bulb holder.
   - Install the bulb.
2. Install the side turn signal lamp.
   - Connect the side turn signal lamp electrical connector.

2012.0 RANGE ROVER (LM), 417-01

EXTERIOR LIGHTING

STOPLAMP SWITCH (G452331)

REMOVAL AND INSTALLATION

REMOVAL

CAUTION:

The brake pedal MUST NOT be depressed during this operation. Failure to comply will result in damage to the stoplamp switch.

1.

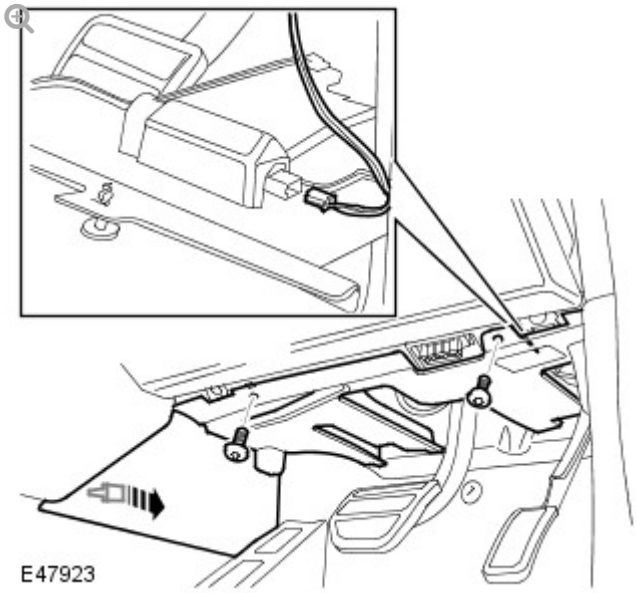

Remove the closing trim panel.

- Release the clip.
- Remove the 2 screws.
- Disconnect the electrical connector.

2.

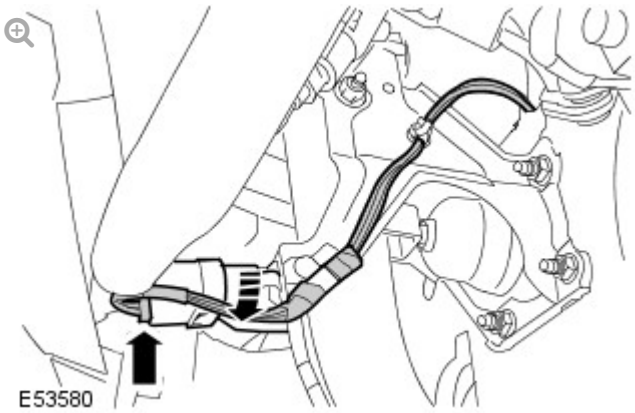

Remove the stoplamp switch.

- Disconnect the electrical connector.
- Rotate the switch clockwise.

INSTALLATION

1. **CAUTION:**

   The brake pedal MUST NOT be depressed during this operation. Failure to comply will result in damage to the stoplamp switch.

   Install the stoplamp switch.

   - Rotate the switch counterclockwise.
   - Connect the electrical connector.

2. Install the closing trim panel.

   - Connect the electrical connector.
   - Secure the clip.
   - Tighten the screws.

EXTERIOR LIGHTING

TRAILER MODULE (G927758)

REMOVAL AND INSTALLATION

REMOVAL

1. Disconnect the battery ground cable.
   For additional information, refer to: Specifications (414-00, Specifications).
   - If the trailer module is to be replaced, use the approved Land Rover diagnostic equipment and follow the on-screen instructions prior to battery disconnection.

2. Remove the access panel from the loadspace trim panel RH.

3. 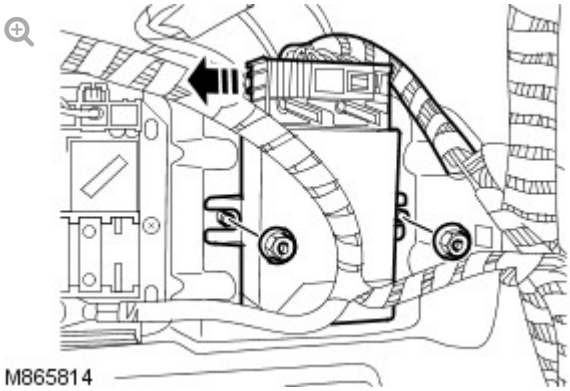

   Release the trailer module.

   - Remove the 2 nuts.

4. Remove the trailer module.

   - Disconnect the electrical connector.

INSTALLATION

1. Install the trailer module.

   - Connect the electrical connector.

2. Secure the trailer module.

   - Install the nuts.

3. Install the access panel to the loadspace trim panel RH.

4. Connect the battery ground cable.
   For additional information, refer to: Specifications (414-00, Specifications).

2012.0 RANGE ROVER (LM), 417-02

INTERIOR LIGHTING

DESCRIPTION AND OPERATION

INTERIOR LIGHTING COMPONENT LOCATION

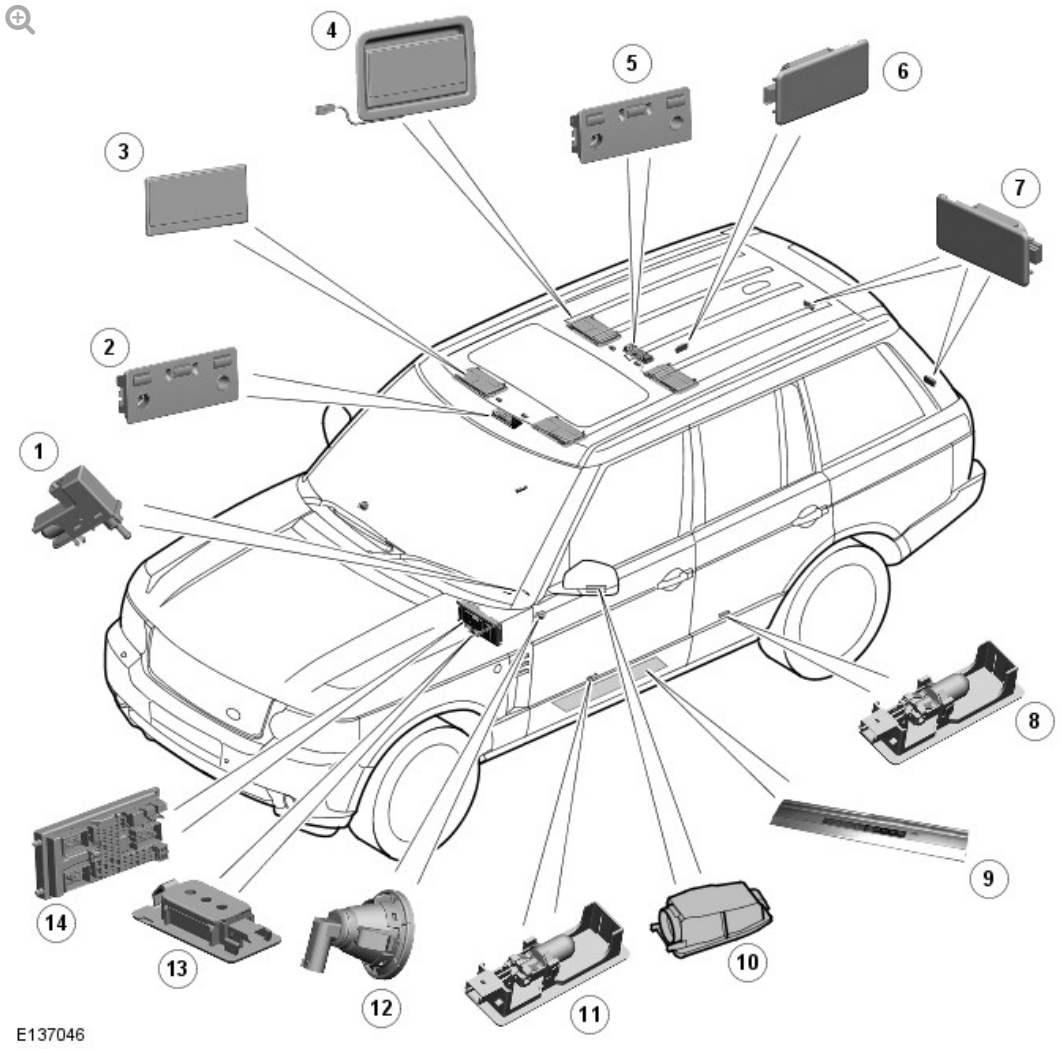

ITEM	DESCRIPTION
1	Glove compartment switch and lamp
2	Front interior and reading lamp
3	Front vanity mirror illumination lamps (2 off)
4	Rear vanity mirror illumination lamps (2 off)
5	Rear interior and reading lamp
6	Luggage compartment lamp
7	Upper tail door lamps
8	Rear door puddle lamp (2 off)
9	Front door treadplate LED illumination (2 off)
10	Door mirror approach lamp (2 off)
11	Front door puddle lamp (2 off)
12	Sill lamp (2 off)
13	Footwell lamp (2 off)
14	Central Junction Box (CJB)

GENERAL

NOTE:

The LED (light emitting diode) illumination of the front door pockets and the front and rear interior door handles is a function of the CJB (central junction box) and only operates when the light control switch is in the side lamp or headlamp positions.

The interior lighting is controlled by the CJB which is located behind the glove compartment. The interior lighting comprises the following lamps:

- Front interior lamp unit
- Rear interior lamp unit
- Upper tail door load space lamps (2 off)

- Luggage compartment load space lamp
- Fascia mounted sill lamps (2 off)
- Under fascia footwell lamps (2 off)
- Door mirror approach lamps (2 off)
- Puddle lamps (4 off).

The interior lamps have two modes of operation; automatic or manual. In the automatic mode the interior lamp functionality is controlled by the CJB on receipt of various input signals. In manual mode, the lamps can be switched on and off using the momentary button adjacent to the front interior lamp or can be disabled completely using the same switch.

The following table shows the bulbs used for the interior lighting and their type and rating:

NOTE:

Some interior lighting is LED and not listed in the below table.

BULB	TYPE	RATING
Front and rear interior lamps	Capless	6W
Front and rear map reading lamps	Capless	6W
Load space lamp	Capless	5W
Luggage compartment lamps (upper tail door)	Capless	5W
Vanity mirror lamps	Festoon	14V 0.1A (0.14W)
Door puddle lamps	Capless	5W
Fascia sill lamps	Capless	3W
Lower fascia footwell lamps	Capless	5W
Door mirror approach lamps	Capless	6W
Glove compartment lamp	Festoon	5W

FRONT AND REAR INTERIOR LAMPS AND MAP READING LAMPS

The front and rear interior lamp assemblies are similar in design. The front interior lamp switch is connected directly to the CJB and controls the manual operation of the interior lamp functionality. The rear interior lamp switch is used only to switch the lamp on and off.

The map reading lights have a non-adjustable beam and are controlled via separate switches. Both the interior and map reading lamps use capless 5W bulbs.

LUGGAGE COMPARTMENT LAMPS

The luggage compartment lamps comprise one lamp unit located on the RH (right-hand) side trim panel, adjacent to the auxiliary power socket, and two lamps located in the interior trim panel of the upper tail door. All of these lamps are of the same design and use capless 5W bulbs. The lamps are controlled by the tail door latch assembly and the CJB and operate on the automatic interior lamp functionality.

GLOVE COMPARTMENT LAMP

The glove compartment lamp is located inside the glove compartment, at the top, adjacent to the latch. The lamp comprises a festoon 5W bulb. The lamp housing also incorporates a plunger type switch which is activated to switch the lamp on when the glove compartment lid is opened.

VANITY MIRROR ILLUMINATION LAMPS

The vanity mirror lamps are located in the front sun visors and also in the headlining for use by the rear seat passengers. The lamps are located behind a hinged cover, either side of the mirror glass. A festoon type bulb is fitted in contacts behind each lamp lens. The lamps are activated by a simple switch which operates when the mirror cover is lifted.

FOOTWELL LAMPS

Two types of footwell lamps are fitted. Two directional sill lamps are located in the front of the fascia and illuminate the sill area. These lamps use 3W

in the front of the fascia and illuminate the sill area. These lamps use 5W capless bulbs.

Two further footwell lamps are located in the lower fascia closing panels and illuminate the area below the fascia. These lamps use 5W capless bulbs. The lamps are controlled by the CJB and operate on the automatic interior lamp functionality.

DOOR PUDDLE LAMPS

Each of the doors is fitted with a puddle lamp to illuminate the ground below the door when the door is open. The front door puddle lamps are located in the lower face of the door, facing the ground. The rear door puddle lamps are located in the bottom of the door trim panel.

The puddle lamps use a capless 5W bulb. The puddle lamps are controlled by the CJB and operate on the automatic interior lamp functionality.

DOOR MIRROR APPROACH LAMPS

The exterior mirror housings are fitted with a lamp which illuminates the area below the front door. The approach lamps comprise a housing located inside the mirror and bulb holder with harness connector. The housing contains a plastic lens which directs a beam of light in the required area. The approach lamps use a capless 6W bulb.

The lamps are controlled by the CJB, via the front driver and passenger door modules. The CJB sends a CAN (controller area network) message to the door module to illuminate the approach lamps when an unlock signal, a front door open signal or an ignition off mode is detected.

DIAGNOSTICS

Diagnostics for the interior lamps is limited to a check of the function of the front interior lamp switch. The CJB can be interrogated using a Land Rover approved diagnostic system to establish the correct operation of the front interior lamp switch, the door switches and the tail door switch.

OPERATION

The interior lamp operation is activated by any of the following input signals:

- Door switch contacts (front and rear)
- Tail door latch assembly
- Ignition switch position I (Aux)
- Central locking, lock request
- Central locking remote handset operation
- Crash sensor
- Front interior lamp switch.

The load space lamp and the upper tail door lamps are not switched on with the interior lamps. These lamps are only activated when the upper tail door is opened. When the upper tail door is opened, the interior lamps, in addition to the load space lamps, are switched on and are subject to the CJB timers. The tail door open signal to the CJB is provided by a microswitch in the tail door latch assembly.

AUTOMATIC OPERATION

The automatic control of the interior lamps has several switch on and off conditions as follows:

- The interior lamps are switched on when one or more doors are opened. When all the doors are closed, the interior lamps are switched off after a delay of 20 seconds. If the vehicle is locked after closing the doors, within the 20 second period, the lamps go off immediately.
- When the interior lamps are on and the ignition is moved to positions I or II, the lamps go off immediately after all doors have been closed.
- When the ignition switch is moved to the off position, the interior lamps are switched on for 20 seconds. This timer is overridden if a door is subsequently opened.
- When the vehicle is unlocked and the doors are closed, the interior lamps can be activated for a further 20 second period by pressing the 'unlock'

button on the remote handset.

- When the vehicle is unlocked from a locked condition, the interior lamps are activated for a 20 second period. This timer is overridden if a door is subsequently opened.
- If a door is left open, the interior lamps will remain on for 16 minutes. After this period, the CJB timer switches the interior lamps off to prevent excessive battery drain.

The CJB uses a PWM (pulse width modulation) operation of the interior lamps for the on/off conditions. The lamps are switched on with a 'soft ramp' of 1.3 seconds. The lamps are switched off with a 'soft ramp' of 2.6 seconds. The soft on/off operation is controlled by a semiconductor within the CJB

MANUAL OPERATION

The interior lamps can be switched on or off using the manual switch for the front interior lamp. The front interior lamp switch will switch all interior lamps, front and rear, on or off. If the interior lamps are on when the switch is pressed, all interior lamps will go off. The on and off automatic switching conditions remain effective even when the manual switch is used.

If the ignition switch is in position I or II and the front interior lamp switch is used to switch the interior lamps on, the lamps will remain on continuously whilst the ignition is in position I or II. If the ignition switch is moved to the off position, the interior lamps will be subject to the 16 minute CJB timer. The interior lamp is immediately switched off when the vehicle is locked. After a locking procedure, the interior lamp automatic control is reinstated.

The rear interior lamp switch will switch the rear interior lamp only on or off.

CONTINUOUS OFF

To prevent drain on the battery if the doors are to remain open for some time, the interior lamps can be turned off permanently. This is stored in the CJB EEPROM and is also activated following a system power down or a reset of the CJB

To enter the continuous off condition, the front interior lamp switch must be

pressed and held for more than 3 seconds. The continuous off function can only be disabled by pressing the front interior lamp switch, after which, full automatic control is resumed. When continuous off is active, the rear interior lamp switch can still be used to switch the rear interior lamp only on or off.

CRASH SIGNAL OPERATION

The CJB receives a crash signal on a hardwired connection from the RCM (restraints control module) in the event of a crash of a severity to activate the airbags. On receipt of this signal, the CJB activates the interior lamps which are on permanently and not subject to the CJB timer.

The crash operation of the interior lamps can only be cancelled by operating the manual switch on the front interior lamp or by locking and unlocking the vehicle.

INTERIOR LIGHTING CONTROL DIAGRAM

NOTE:

A = Hardwired; **N** = Medium speed CAN bus

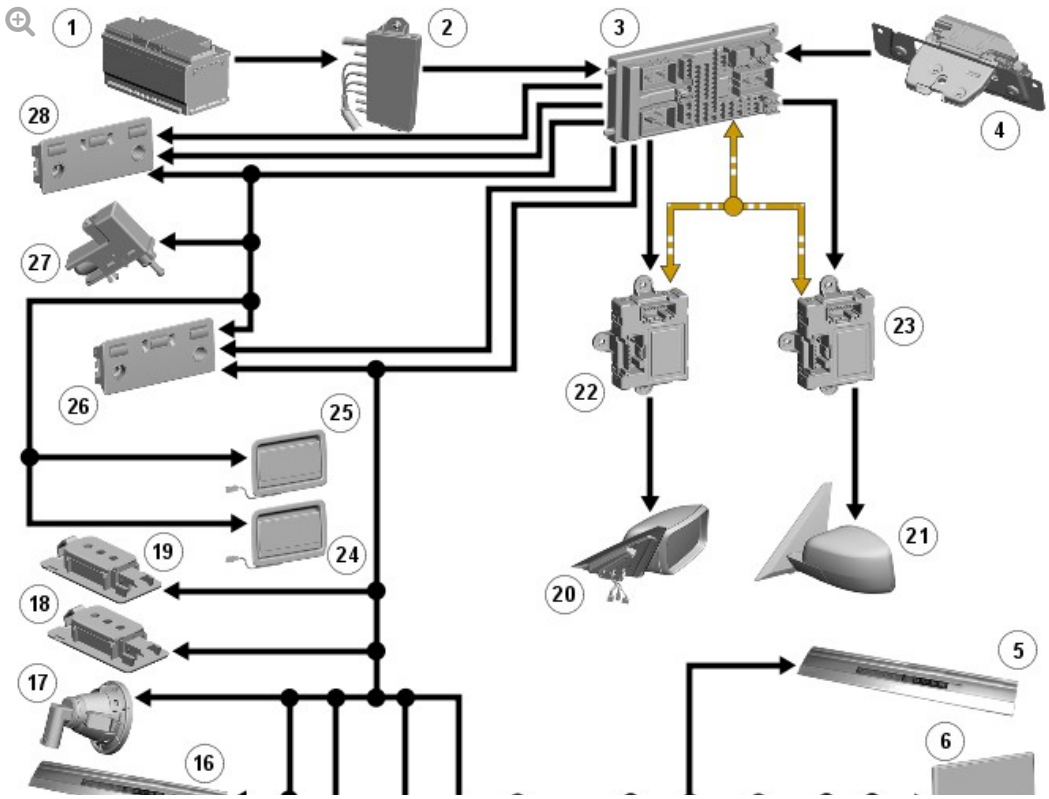

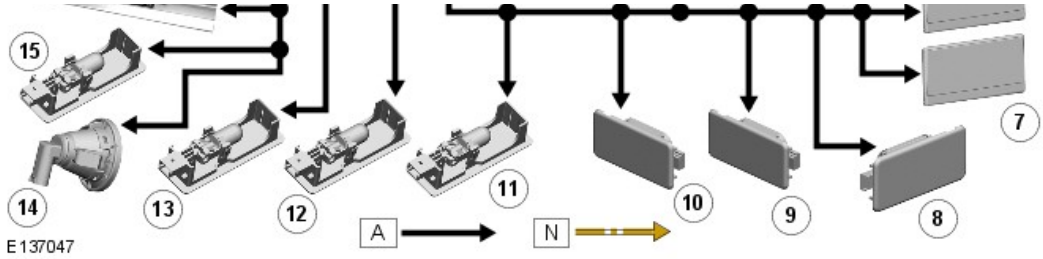

ITEM	DESCRIPTION
1	Battery
2	Battery Junction Box (BJB)
3	Central Junction Box (CJB)
4	Tail door latch motor assembly
5	RH treadplate illumination LEDs
6	LH front vanity mirror illumination lamps
7	RH front vanity mirror illumination lamps
8	Luggage compartment lamp
9	LH upper tail door lamp
10	RH upper tail door lamp
11	LH rear door puddle lamp
12	RH rear door puddle lamp
13	LH front door puddle lamp
14	LH sill lamp
15	RH front door puddle lamp
16	LH treadplate illumination LEDs
17	RH sill lamp
18	LH footwell lamp
19	RH footwell lamp
20	Passenger door mirror approach lamp
21	Driver's door mirror approach lamp
22	Passenger door module
23	Driver's door module
24	LH rear vanity mirror illumination lamps

24	LH rear vanity mirror illumination lamps
25	RH rear vanity mirror illumination lamps
26	Front interior and reading lamps
27	Glove compartment switch and lamp
28	Rear interior and reading lamps

2012.0 RANGE ROVER (LM), 417-02

INTERIOR LIGHTING

DESCRIPTION AND OPERATION

INTERIOR LIGHTING COMPONENT LOCATION – RANGE ROVER ULTIMATE

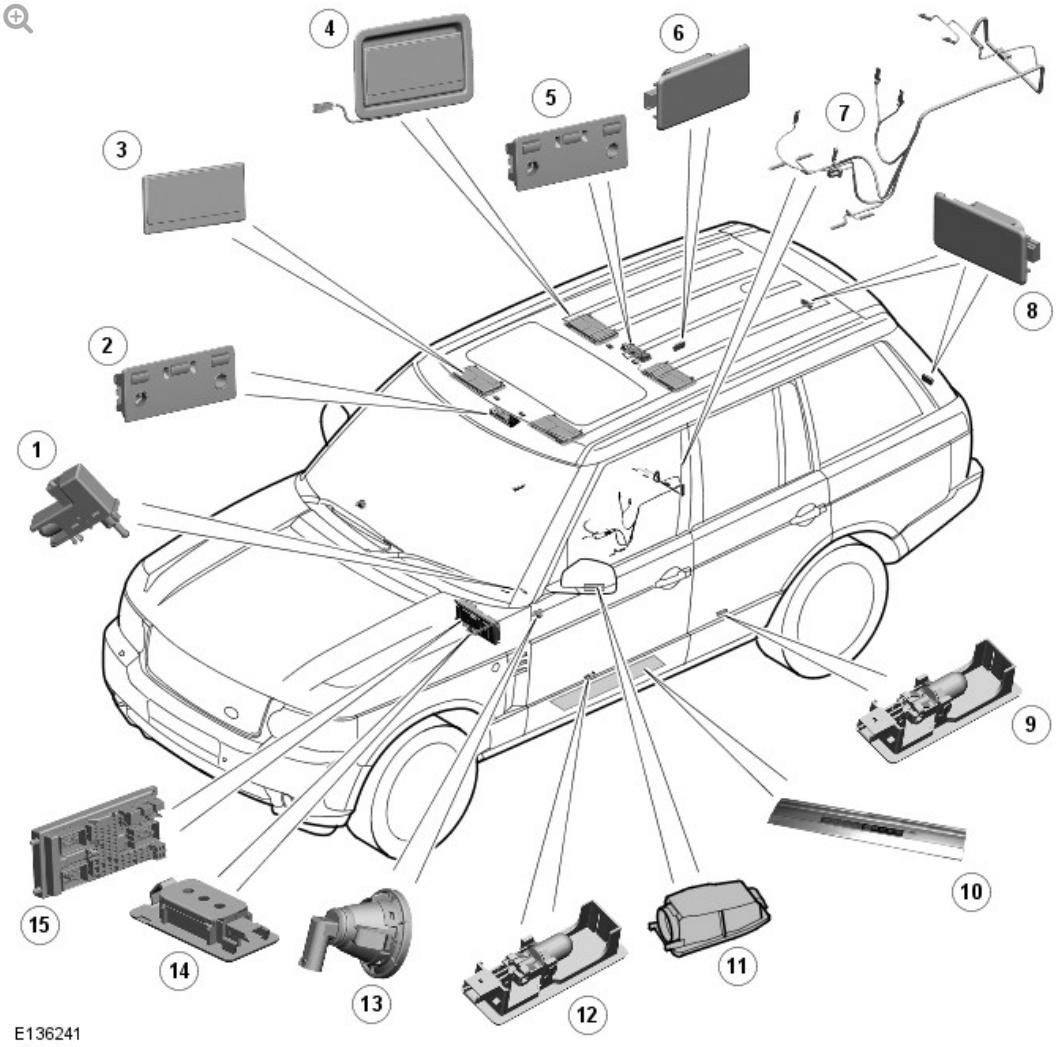

ITEM	DESCRIPTION
1	Glove compartment switch and lamp
2	Front interior and reading lamp
3	Front vanity mirror illumination lamps (2 off)
4	Rear vanity mirror illumination lamps (2 off)
5	Rear interior and reading lamp
6	Luggage compartment lamp
7	Rear floor console mood lighting LEDs and harness
8	Upper tail door lamps

9	Rear door puddle lamp (2 off)
10	Front door treadplate LED illumination (2 off)
11	Door mirror approach lamp (2 off)
12	Front door puddle lamp (2 off)
13	Sill lamp (2 off)
14	Footwell lamp (2 off)
15	Central Junction Box (CJB)

GENERAL

NOTE:

The LED (light emitting diode) illumination of the front door pockets and the front and rear interior door handles is a function of the CJB (central junction box) and only operates when the light control switch is in the side lamp or headlamp positions. The rear floor console mood lighting on the Range Rover Ultimate also operates on this circuit.

The interior lighting is controlled by the CJB which is located behind the glove compartment. The interior lighting comprises the following lamps:

- Front interior lamp unit
- Rear interior lamp unit
- Upper tail door load space lamps (2 off)
- Luggage compartment load space lamp
- Fascia mounted sill lamps (2 off)
- Under fascia footwell lamps (2 off)
- Door mirror approach lamps (2 off)
- Puddle lamps (4 off).

The interior lamps have two modes of operation; automatic or manual. In the automatic mode the interior lamp functionality is controlled by the CJB

on receipt of various input signals. In manual mode, the lamps can be switched on and off using the momentary button adjacent to the front interior lamp or can be disabled completely using the same switch.

The Range Rover Ultimate has additional mood lighting in the rear floor console which is controlled by the Rear Entertainment Control Module (RECM). LED illuminated front treadplates are also fitted as standard on the Range Rover Ultimate and are available as an accessory fit on other models.

The following table shows the bulbs used for the interior lighting and their type and rating:

NOTE:

Some interior lighting is LED and not listed in the below table.

BULB	TYPE	RATING
Front and rear interior lamps	Capless	6W
Front and rear map reading lamps	Capless	6W
Load space lamp	Capless	5W
Luggage compartment lamps (upper tail door)	Capless	5W
Vanity mirror lamps	Festoon	14V 0.1A (0.14W)
Door puddle lamps	Capless	5W
Fascia sill lamps	Capless	3W
Lower fascia footwell lamps	Capless	5W
Door mirror approach lamps	Capless	6W
Glove compartment lamp	Festoon	5W

FRONT AND REAR INTERIOR LAMPS AND MAP READING LAMPS

The front and rear interior lamp assemblies are similar in design. The front interior lamp switch is connected directly to the CJB and controls the manual operation of the interior lamp functionality. The rear interior lamp

switch is used only to switch the lamp on and off.

The map reading lights have a non-adjustable beam and are controlled via separate switches. Both the interior and map reading lamps use capless 5W bulbs.

LUGGAGE COMPARTMENT LAMPS

The luggage compartment lamps comprise one lamp unit located on the RH (right-hand) side trim panel, adjacent to the auxiliary power socket, and two lamps located in the interior trim panel of the upper tail door. All of these lamps are of the same design and use capless 5W bulbs. The lamps are controlled by the CJB and operate on the automatic interior lamp functionality.

GLOVE COMPARTMENT LAMP

The glove compartment lamp is located inside the glove compartment, at the top, adjacent to the latch. The lamp comprises a festoon 5W bulb. The lamp housing also incorporates a plunger type switch which is activated to switch the lamp on when the glove compartment lid is opened.

VANITY MIRROR ILLUMINATION LAMPS

The vanity mirror lamps are located in the front sun visors and also in the headlining for use by the rear seat passengers. The lamps are located behind a hinged cover, either side of the mirror glass. A festoon type bulb is fitted in contacts behind each lamp lens. The lamps are activated by a simple switch which operates when the mirror cover is lifted.

FOOTWELL LAMPS

Two types of footwell lamps are fitted. Two directional sill lamps are located in the front of the fascia and illuminate the sill area. These lamps use 3W capless bulbs.

Two further footwell lamps are located in the lower fascia closing panels and illuminate the area below the fascia. These lamps use 5W capless bulbs. The

lamps are controlled by the CJB and operate on the automatic interior lamp functionality.

DOOR PUDDLE LAMPS

Each of the doors is fitted with a puddle lamp to illuminate the ground below the door when the door is open. The front door puddle lamps are located in the lower face of the door, facing the ground. The rear door puddle lamps are located in the bottom of the door trim panel.

The puddle lamps use a capless 5W bulb. The puddle lamps are controlled by the CJB and operate on the automatic interior lamp functionality.

DOOR MIRROR APPROACH LAMPS

The exterior mirror housings are fitted with a lamp which illuminates the area below the front door. The approach lamps comprise a housing located inside the mirror and bulb holder with harness connector. The housing contains a plastic lens which directs a beam of light in the required area. The approach lamps use a capless 6W bulb.

The lamps are controlled by the CJB, via the front driver and passenger door modules. The CJB sends a CAN (controller area network) message to the door module to illuminate the approach lamps when an unlock signal, a front door open signal or an ignition off mode is detected.

REAR FLOOR CONSOLE MOOD LIGHTING – RANGE ROVER ULTIMATE

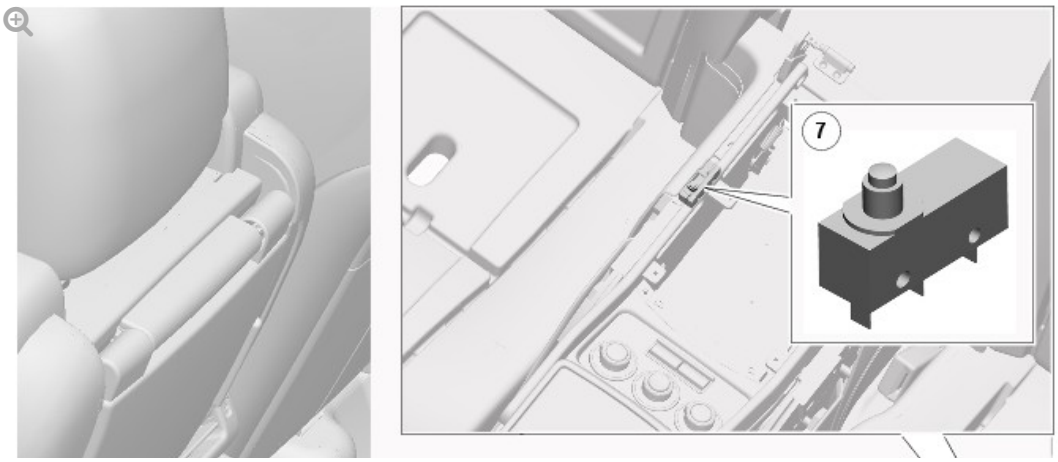

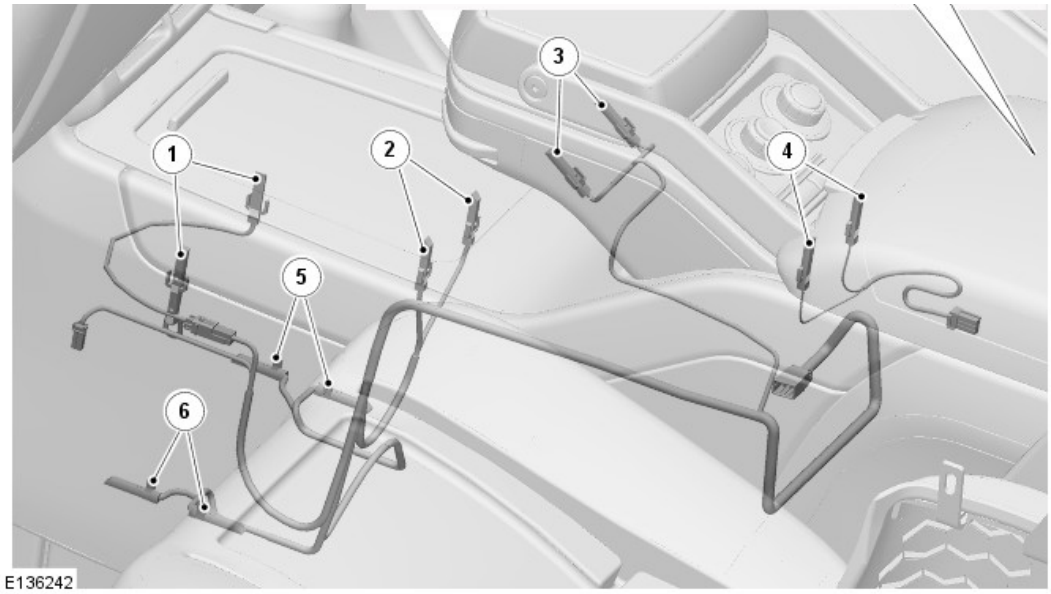

ITEM	DESCRIPTION
1	Bottle chiller illumination LEDs
2	Glass receptacle LEDs
3	Mood lighting LEDs
4	Rear stowage box LEDs
5	Right Hand (RH) side mood lighting floor illumination LEDs
6	Left Hand (LH) side mood lighting floor illumination LEDs
7	Stowage box lid microswitch

The rear mood lighting in the Range Rover Ultimate comprises 12 LEDs which illuminate the chiller unit, the rear stowage box and the console and rear floor areas.

Two LEDs are used to illuminate the interior of the rear stowage box. With the exception of the rear stowage box, allLEDs are active at all times when the lighting control switch is in the side lamp or headlamp positions or in the AUTO position and the exterior lamps are active. The LEDs in the rear stowage box are operated by a simple microswitch which is operated by the stowage box lid. When the lid is closed, the LEDs are off.

Four LEDs are used in the chiller unit. Two LEDs illuminate a ring around the bottle chiller unit and two further LEDs illuminate the tubes for the glasses.

Two LEDs are located below the table rotating mechanism and illuminate

Two LEDs are located below the table rotating mechanism and illuminate the area of the sliding cover for the chiller unit.

Four LEDs are located at the base of the floor console and illuminate the rear footwell area on both the LH (left-hand) and RH side of the console.

The mood lighting, with the exception of the two rear stowage box LEDs, are controlled by the Rear Entertainment Control Module (RECM). The RECM receives a PWM (pulse width modulation) input from the instrument panel illumination circuit. The PWM duty-cycle is dependant on the position of the instrument panel illumination dimmer rheostat. The RECM monitors the PWM input and produces a PWM ground connection to the rear floor console mood lighting LEDs.

The PWM input to the RECM is derived from a connection into the rear climate control panel connector.

DIAGNOSTICS

Diagnostics for the interior lamps is limited to a check of the function of the front interior lamp switch. The CJB can be interrogated using Land Rover approved diagnostic equipment to establish the correct operation of the front interior lamp switch, the door switches and the tail door switches.

OPERATION

The interior lamp operation is activated by any of the following input signals:

- Door switch contacts (front and rear)
- Ignition switch position I (Aux)
- Central locking, lock request
- Central locking remote handset operation
- Crash sensor
- Front interior lamp switch.

The load space lamp and the upper tail door lamps are not switched on with the interior lamps. These lamps are only activated when the upper tail door

is opened. When the upper tail door is opened, the interior lamps, in addition to the load space lamps, are switched on and are subject to the CJB timers.

AUTOMATIC OPERATION

The automatic control of the interior lamps has several switch on and off conditions as follows:

- The interior lamps are switched on when one or more doors are opened. When all the doors are closed, the interior lamps are switched off after a delay of 20 seconds. If the vehicle is locked after closing the doors, within the 20 second period, the lamps go off immediately.
- When the interior lamps are on and the ignition is moved to positions I or II, the lamps go off immediately after all doors have been closed.
- When the ignition switch is moved to the off position, the interior lamps are switched on for 20 seconds. This timer is overridden if a door is subsequently opened.
- When the vehicle is unlocked and the doors are closed, the interior lamps can be activated for a further 20 second period by pressing the 'unlock' button on the remote handset.
- When the vehicle is unlocked from a locked condition, the interior lamps are activated for a 20 second period. This timer is overridden if a door is subsequently opened.
- If a door is left open, the interior lamps will remain on for 16 minutes. After this period, the CJB timer switches the interior lamps off to prevent excessive battery drain.

The CJB uses a PWM operation of the interior lamps for the on/off conditions. The lamps are switched on with a 'soft ramp' of 1.3 seconds. The lamps are switched off with a 'soft ramp' of 2.6 seconds. The soft on/off operation is controlled by a semiconductor within the CJB

MANUAL OPERATION

The interior lamps can be switched on or off using the manual switch for the

front interior lamp. The front interior lamp switch will switch all interior lamps, front and rear, on or off. If the interior lamps are on when the switch is pressed, all interior lamps will go off. The on and off automatic switching conditions remain effective even when the manual switch is used.

If the ignition switch is in position I or II and the front interior lamp switch is used to switch the interior lamps on, the lamps will remain on continuously whilst the ignition is in position I or II. If the ignition switch is moved to the off position, the interior lamps will be subject to the 16 minute CJB timer. The interior lamp is immediately switched off when the vehicle is locked. After a locking procedure, the interior lamp automatic control is reinstated.

The rear interior lamp switch will switch the rear interior lamp only on or off.

CONTINUOUS OFF

To prevent drain on the battery if the doors are to remain open for some time, the interior lamps can be turned off permanently. This is stored in the CJB EEPROM and is also activated following a system power down or a reset of the CJB

To enter the continuous off condition, the front interior lamp switch must be pressed and held for more than 3 seconds. The continuous off function can only be disabled by pressing the front interior lamp switch, after which, full automatic control is resumed. When continuous off is active, the rear interior lamp switch can still be used to switch the rear interior lamp only on or off.

CRASH SIGNAL OPERATION

The CJB receives a crash signal on a hardwired connection from the RCM (restraints control module) in the event of a crash of a severity to activate the airbags. On receipt of this signal, the CJB activates the interior lamps which are on permanently and not subject to the CJB timer.

The crash operation of the interior lamps can only be cancelled by operating the manual switch on the front interior lamp or by locking and unlocking the vehicle.

INTERIOR LIGHTING CONTROL DIAGRAM

NOTE:

A = Hardwired; **N** = Medium speed CAN bus

ITEM	DESCRIPTION
1	Battery
2	Battery Junction Box (BJB)
3	Central Junction Box (CJB)
4	Tail door latch motor assembly
5	Lighting control switch (illumination dimmer control)
6	Rear climate control panel
7	Rear entertainment Control Module (RECM)
8	Rear floor console mood lighting harness and LEDs

9	RH treadplate illumination LEDs
10	LH front vanity mirror illumination lamps
11	RH front vanity mirror illumination lamps
12	Luggage compartment lamp
13	LH upper tail door lamp
14	RH upper tail door lamp
15	LH rear door puddle lamp
16	RH rear door puddle lamp
17	LH front door puddle lamp
18	LH sill lamp
19	RH front door puddle lamp
20	LH treadplate illumination LEDs
21	RH sill lamp
22	LH footwell lamp
23	RH footwell lamp
24	Passenger door mirror approach lamp
25	Driver's door mirror approach lamp
26	Passenger door module
27	Driver's door module
28	LH rear vanity mirror illumination lamps
29	RH rear vanity mirror illumination lamps
30	Front interior and reading lamps
31	Glove compartment switch and lamp
32	Rear interior and reading lamps

2012.0 RANGE ROVER (LM), 417-02

INTERIOR LIGHTING

DIAGNOSIS AND TESTING

PRINCIPLE OF OPERATION

For a detailed description of the interior lighting system and operation, refer to the relevant Description and Operation section of the workshop manual. REFER to: Interior Lighting (417-02 Interior Lighting, Description and Operation).

INSPECTION AND VERIFICATION

CAUTION:

Diagnosis by substitution from a donor vehicle is **NOT** acceptable. Substitution of control modules does not guarantee confirmation of a fault and may also cause additional faults in the vehicle being checked and/or the donor vehicle.

NOTE:

Check and rectify basic faults before beginning diagnostic routines involving pinpoint tests.

1. Verify the customer concern.

1. Visually inspect for obvious signs of mechanical or electrical damage.

Visual Inspection

MECHANICAL	ELECTRICAL
▪ Main interior lamp condition and installation ▪ Map reading lamp(s) condition and installation ▪ Vanity mirror lamp(s) condition and installation ▪ Glove compartment lamp condition and installation ▪ Footwell lamp(s) condition and installation ▪ Ignition switch glow ring condition and installation ▪ Door mirror approach lamp(s) condition and installation ▪ Puddle lamp(s) condition and installation ▪ Luggage compartment lamp condition and installation	▪ Bulbs ▪ Fuses ▪ Battery Junction Box (BJB) ▪ Central Junction Box (CJB) ▪ Wiring harness ▪ Loose or corroded connector(s) ▪ Main interior lamp switch ▪ Map reading lamp switches ▪ Vanity mirror lamp switches ▪ Glove compartment lamp switch ▪ Waterfall lighting LED ▪ Tailgate lamp switch

1. If an obvious cause for an observed or reported concern is found, correct the cause (if possible) before proceeding to the next step.

1. If the cause is not visually evident, verify the symptom and refer to the Symptom Chart, alternatively check for Diagnostic Trouble Codes (DTCs) and refer to the relevant DTC Index.

SYMPTOM CHART

SYMPTOM	POSSIBLE CAUSES	ACTION
Main interior lamp inoperative	▪ Bulb(s) failure ▪ Fuse(s) blown ▪ Circuit fault ▪ Switch fault	Check the bulb(s) condition. Check the fuse(s). Check the lamp circuits. Check the switch function. Refer to the electrical guides.
Waterfall lighting LED inoperative	▪ LED failure ▪ Fuse(s) blown ▪ Circuit fault	Check the LED condition. Check the LED connector. Check the fuse(s). Check the lamp circuits. Refer to the electrical guides.
Map reading lamp(s) inoperative	▪ Bulb(s) failure ▪ Fuse(s) blown ▪ Circuit fault ▪ Switch fault	Check the bulb(s) condition. Check the fuse(s). Check the lamp circuits. Check the switch function. Refer to the electrical guides.
Vanity mirror lamp(s) inoperative	▪ Bulb failure ▪ Fuse(s) blown ▪ Circuit fault ▪ Switch fault	Check the bulb condition. Check the fuse(s). Check the lamp circuits. Check the switch function. Refer to the electrical guides.
Glove	▪ Bulb	Check the bulb condition. Check the fuse(s). Check

Glove compartment lamp inoperative	▪ Bulb failure ▪ Fuse(s) blown ▪ Circuit fault ▪ Switch fault	Check the bulb condition. Check the fuse(s). Check the lamp circuits. Check the switch function. Refer to the electrical guides.
Footwell lamp inoperative	▪ Bulb failure ▪ Fuse(s) blown ▪ Circuit fault	Check the bulb condition. Check the fuse(s). Check the lamp circuits. Refer to the electrical guides.
Ignition switch glow ring inoperative	▪ Bulb/Glow ring failure ▪ Fuse(s) blown ▪ Circuit fault	Check the bulb/glow ring condition. Check the fuse(s). Check the lamp circuits. Refer to the electrical guides.
Door mirror approach lamp(s) inoperative	▪ Bulb failure ▪ Fuse(s) blown ▪ Circuit fault	Check the bulb condition. Check the fuse(s). Check the lamp circuits. Refer to the electrical guides.
Puddle lamp(s) inoperative	▪ Bulb failure ▪ Fuse(s) blown ▪ Circuit fault	Check the bulb condition. Check the fuse(s). Check the lamp circuits. Refer to the electrical guides.
Luggage compartment lamp inoperative	▪ Bulb failure ▪ Fuse(s) blown ▪ Circuit fault ▪ Switch	Check the bulb condition. Check the fuse(s). Check the lamp circuits. Check the switch function. Refer to the electrical guides.

	fault	

DTC INDEX

For a list of Diagnostic Trouble Codes (DTCs) that could be logged on this vehicle, please refer to Section 100-00. REFER to: Diagnostic Trouble Code (DTC) Index - DTC: Module Name: Central Junction Box (100-00, Description and Operation).

2012.0 RANGE ROVER (LM), 417-02

INTERIOR LIGHTING

CENTER INTERIOR LAMP (G916061)

REMOVAL AND INSTALLATION

REMOVAL

1.

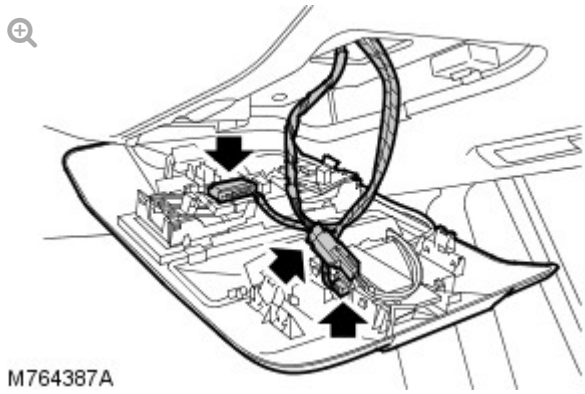

Remove the center overhead console.

- Carefully release the 3 clips.
- Disconnect the 3 electrical connectors.

2.

NOTE:

Do not disassemble further if the component is removed for access only.

Remove the intrusion sensor and module from the center overhead console.

- Release from the 2 clips.

3. Remove the center interior lamp.
   - Release the 2 clips.

INSTALLATION

1. Install the center interior lamp.
   - Secure the 2 clips.
2. Install the intrusion sensor and module to the center overhead console.
   - Secure in the 2 clips.
3. Install the center overhead console.
   - Connect the 3 electrical connectors.
   - Secure the 3 clips.

2012.0 RANGE ROVER (LM), 417-04

DAYTIME RUNNING LAMPS (DRL)

(DRL)

DESCRIPTION AND OPERATION

DRL use the full intensity low beam headlamps which are permanently illuminated when the vehicle is being driven. DRL are used in a number of markets and there are two systems to cover these markets.

DRL CANADIAN MARKET

DRL for this market use full intensity low beam headlamps. The side marker lamps and license plate lamps will be on, but instrument cluster illumination will be off. DRL are active when the following parameters are met:

- Parking brake is off on vehicles with manual transmission or PARK is not selected on vehicles with automatic transmission
- Ignition is in mode 6 (ignition on)
- The CJB (central junction box) receives an engine running signal
- The lighting control switch is in the off, side or 'Auto' lamps position.

NOTES:

- If the lighting control switch is moved to the side lamp or headlamp positions, DRL are deactivated and normal side lamp and headlamp functionality is operational.
- Adaptive Front lighting System (AFS) (where fitted) is deactivated when the DRL are active.
- When DRL are active, the headlamp flash function using the left hand steering column multifunction switch will operate normally. The high beam headlamp function using the left hand steering column multifunction switch will be deactivated.

When the parking brake is applied or the selector lever is in the PARK position on automatic transmission vehicles, DRL are turned off. This is to reduce battery discharge during long periods of engine idling in cold

reduce battery discharge during long periods of engine idling in cold climate conditions. When the parking brake is released or the selector lever is moved from the PARK position, normal DRL functionality is restored.

DRL DENMARK, HOLLAND, NORWAY, SWEDEN, FINLAND AND POLAND

NOTE:

DRL for Poland is on vehicles from 2008MY.

DRL for these markets use full intensity low beam headlamps. Side lamps and license plate lamps will be on, but instrument cluster illumination will be off. DRL are active when the following parameters are met:

- Ignition is in mode 6 (ignition on)
- The CJB receives an engine running signal
- The lighting control switch is in the off or 'Auto' position.

NOTE:

When DRL are active, the headlamp flash function using the left hand steering column multifunction switch will operate normally. The high beam headlamp function using the left hand steering column multifunction switch will be deactivated.

If the lighting control switch is moved to the side lamp or headlamp positions or the 'Auto' feature illuminates the exterior lamps, DRL are deactivated and normal side lamp and headlamp functionality is operational.

2012.0 RANGE ROVER (LM), 418-00

MODULE COMMUNICATIONS NETWORK

SPECIFICATIONS

Torque Specifications

DESCRIPTION	NM	LB-FT
Body ground cable to stud nut	9	6.6
Hood ground cable nut	6	4.4
Starter motor switch lead nut (Diesel only)	4	3

Battery positive cable to starter motor nut (Diesel)	22	16
Battery positive cable to starter motor nut (Petrol)	10	7
Starter motor bolts	47	35
Headlamp nuts	4	3
Tire pressure module sensor valve	8	6
Audio amplifier bolts	5	7
Antenna nuts	5	3.7
Telephone control unit nuts	1.5	1.1
Rear seat entertainment interface unit bracket bolts	9	6.6
Satellite digital audio radio service (SDARS) tuner/receiver bolts (NAS only)	8	6
Parking aid sounder nut	2	1.5
Tailgate solenoid motor bolt	10	7
Horn mounting bracket bolt	20	15
Alarm tilt sensor nuts	7	5
Engine junction box (EJB) nuts	9	6.6
EJB positive battery cable nut	9	6.6

2012.0 RANGE ROVER (LM), 418-00

MODULE COMMUNICATIONS NETWORK

DIAGNOSIS AND TESTING

PRINCIPLES OF OPERATION

For a detailed description of the Communications Network, refer to the relevant Description and Operation sections in the workshop manual.

INSPECTION AND VERIFICATION

CAUTIONS:

- Diagnosis by substitution from a donor vehicle is **NOT** acceptable. Substitution of control modules does not guarantee confirmation of a fault, and may also cause additional faults in the vehicle being tested and/or the donor vehicle.
- Electronic modules are sensitive to static electrical charges. If exposed to these charges, damage may result.

1. Verify the customer concern

1. Visually inspect for obvious signs of damage and system integrity

Visual Inspection

ELECTRICAL
▪ Fuses (refer to electrical guide) ▪ Wiring harness ▪ Correct engagement of electrical connectors ▪ Loose or corroded connections ▪ Routing of fibre optic harnesses ▪ Correct engagement of optical connectors ▪ Correct placement of optical connectors (ring order) ▪ Correct assembly of optical connectors (backout, etc) ▪ Damage to fibre (chafing, abrasion, kinking, cuts, etc)

1. If an obvious cause for an observed or reported concern is found, correct the cause (if possible) before proceeding to the next step

1. If the cause is not visually evident, check for Diagnostic Trouble Codes (DTCs) and refer to the DTC Index

SYMPTOM CHART

SYMPTOM	POSSIBLE CAUSES	ACTION
MOST network fault - Entertainment system on/off switch amber LED flashing	▪ MOST ring broken ▪ Control module on MOST network power or ground circuit open circuit, high resistance ▪ Control module on MOST network internal failure	▪ GO to Pinpoint Test **B.**
MOST network fault - Touch screen display blank	▪ Touch screen display power or ground circuit open circuit, high resistance ▪ Touch screen display internal failure	▪ GO to Pinpoint Test **G.**

CONTROLLER AREA NETWORK (CAN)

Control Module Connections to the CAN Harness

Control modules are connected to the CAN harness either in a 'loop' or 'spur' configuration. In the 'loop' type configuration the CAN harness loops into the module (via two connector pins) and then loops out of the module (via another two connector pins). In the 'spur' type configuration, a harness spur is spliced into the main 'backbone' of the CAN harness and the module is connected to the harness spur via two connector pins.

CAN Harness Architecture

For a detailed description of the CAN Networks and architecture, refer to the relevant Description and Operation section in the Workshop Manual.

CAN Network Integrity Tests

If a control module is suspected of non-communication, the Network Integrity test application available on the manufacturer approved diagnostic system can be used to confirm if communication is possible between the control modules on the vehicle and the manufacturer approved diagnostic system (via the J1962 diagnostic connector). The results from the test can be used to determine if either a single module or multiple modules are failing to communicate.

CAN Terminating Modules

If the Network Integrity test indicates that one or more module on one of the CAN networks (HS or MS) are failing to communicate, there are several checks that can be made. The first step is to identify if both of the CAN terminating modules on each individual CAN Bus are communicating. If both CAN terminating modules for each individual CAN Bus are communicating (identified via the Network Integrity test), then it can be confirmed that the main 'backbone' of the CAN harness is complete. The main 'backbone' of the CAN harness consists of all the modules connected to the CAN harness via a 'loop' configuration and also includes the two terminating modules.

Communication with both CAN terminating modules via the Network

Integrity test confirms the physical integrity of the main 'backbone' of the CAN harness (and the harness spur to the J1962 diagnostic connector). This means that there is no requirement to check the resistance of the CAN Network. This is because the standard check for 60 ohms across the CAN High and CAN Low lines will not provide any additional information regarding the physical condition of the CAN harness, beyond what has already been determined from the Network Integrity test.

Non-Communication of a Terminating Module

If a Network Integrity test reveals a terminating module is failing to communicate it can indicate a break in the main 'backbone' of the CAN harness. The first checks should always be to confirm the power and ground supplies to the non-communicating module are correct. Providing these are correct, the resistance between the CAN High and CAN Low lines at the J1962 connector can be checked to determine the integrity of the main 'backbone' of the CAN harness. After disconnecting the battery a reading of 120 ohms would indicate an open circuit in the main 'backbone' of the CAN harness. Alternatively, a reading of 60 ohms would indicate that there is no open circuit fault with the main 'backbone' of the CAN harness.

It is worth noting that even if one of the terminating modules is disconnected from the CAN harness, communications between the modules still connected may still be possible. Therefore communication between the manufacturer approved diagnostic system and the connected modules may also be possible.

Locating CAN Harness Open Circuits

In the case where multiple modules, including a terminating module, are failing to communicate, having first confirmed the power and ground supplies are correct, the approximate location of the open circuit can be identified from analysis of the Network Integrity test results and reference to the relevant CAN network circuit diagrams. For example, if an open circuit existed in a certain position on the CAN harness, any module positioned on the Network between the J1962 connector and the open circuit should return a response during the Network Integrity test. No responses would be returned from any modules past the open circuit fault in the Network.

CAN Harness 'Spur' Type Configuration Circuits

If, after the initial checks (Network Integrity test using the manufacturer approved diagnostic system, and power and ground supplies to the module have been checked and confirmed as correct), a module that is connected to the CAN harness via a 'spur' type configuration is suspected of not communicating, then the physical integrity of the CAN harness 'spur' can be checked.

This is most easily undertaken by individually checking the continuity of the CAN High and CAN Low lines between the non-communicating module connector (with the module disconnected) and the J1962 diagnostic connector.

'Lost Communications' DTCs

As well as the methods described so far in this document, which can be used to determine the location of an open circuit in the CAN harness, 'Lost Communications' DTCs can also be used for this purpose. Lost communication DTCs mean that a module is not receiving CAN information from another module.

For example, if a global DTC read were to be carried out, only DTCs stored in the modules that the manufacturer approved diagnostic system could communicate with would be displayed. If there was an open circuit fault in a certain position on the CAN harness, the modules that could display DTCs would all be prior to the open circuit on the Network, and these modules should display 'Lost Communications' DTCs with all the modules located on the Network past the open circuit fault.

'Bus off' DTCs

The references to bus and its condition refer to the network concerned and the modules on that network.

If a module logs a 'Bus Off' DTC, it means that the module has detected CAN transmission errors and has disabled it's own CAN transmissions and disconnected itself from the network in an attempt to allow the rest of the network to function. At this point the 'Bus Off' DTC is set. A common cause of 'Bus Off' DTCs can be a short circuit in the CAN network.

MEDIA ORIENTED SYSTEMS TRANSPORT (MOST)

NOTE:

Items 1, 2 and 9 will always be present. The remaining items are optional and/or market specific.

ITEM	DESCRIPTION
1	Audio head unit
2	Touch screen display
3	CD autochanger
4	Portable audio interface module
5	DAB tuner module
6	Television receiver
7	Telephone module
8	Rear seat entertainment module
9	Power amplifier

Overview

The basic guidelines are covered in the description and operation section, such as not attempting to repair fibre optic cables, but additional precautions include:

- Do not touch the exposed ends of the optical fibres (grease from skin can contaminate the fibre)
- Whenever the fibre optic cable is disconnected, cover the connectors to prevent dust contamination
- Do not expose the fibre optic cable to heat

- Do not bend the fibre optic cable through less than a 25 mm (one inch) radius
- Do not use laser pens to test the fibre optic cable's ability to pass light

MOST Diagnostic Tools

There are two dedicated tools for testing the MOST system:

MOST tester. The MOST tester is connected to the MOST network in place of a control module. It will confirm receipt of any existing MOST signal and transmit it to the next control module on the network. Perform the following tests to validate the operation of the MOST tester. GO to Pinpoint Test A.

MOST prism: The MOST prism is connected in the same way as the MOST tester but will simply reflect any existing signal onward to the next control module. Using the MOST prism before or after a long run of harness may cause a ring break as a good signal may be too weak after travelling the extended distance. Also, the MOST prism will pass light in either direction so will not detect reversed MOST terminals elsewhere in the network. For these reasons, the MOST tester is the preferred tool and should be used unless limited access does not permit it

MOST Ring Break Indication

A ring break in the MOST network is indicated by a loss of functionality and the entertainment system on/off switch amber LED flashing. The touch screen will default to the logo screen if the fault is present at the start of the ignition cycle and will freeze on the current screen if the fault occurs during an ignition cycle. Possible causes of ring breaks are listed in the symptom chart.

PINPOINT TESTS

NOTES:

- '2+0' indicates that the loop harness connector consists of 2 fibre optic terminals and 0 electrical terminals.
- The MOST tester may continue to emit a tone or illuminate the LED after the test switch is released. This does not indicate a fault.

NOTES:

- '2+4' indicates that the loop harness connector consists of 2 fibre optic terminals and 4 electrical terminals.
- The MOST tester may continue to emit a tone or illuminate the LED after the test switch is released. This does not indicate a fault.

NOTE:

The MOST tester may continue to emit a tone or illuminate the LED after the test switch is released. This does not indicate a fault.

PINPOINT TEST A : MOST TESTER TESTS	
TEST CONDITIONS	DETAILS/RESULTS/ACTIONS
A1: MOST TESTER BATTERY TEST	
	1 Set the MOST tester power switch to 'on'
	Is the power LED illuminated? **Yes** Test passed. GO to A2. **No** Test failed. Install a new battery into the MOST tester. GO to A1.
A2: 2+0 INPUT/OUTPUT TEST	
	1 Set the MOST tester power switch to 'on'
	2 Set the connector selector switch to '2+0'
	3 Set the indication switch to 'beep' or 'LED'
	4 Remove the covers from the MOST tester 2+0 connector and the

	2+0 loop harness connector
	5 Connect the 2+0 loop harness to the MOST tester 2+0 connector
	6 Operate the test switch and check the MOST tester beep/LED
	Did the MOST tester emit a tone or illuminate the LED? **Yes** Test passed. **GO to A3**. **No** Test failed. MOST tester or 2+0 harness fault
	A3: 2+4 INPUT/OUTPUT TEST
	1 Set the MOST tester power switch to 'on'
	2 Set the connector selector switch to '2+4'
	3 Set the indication switch to 'beep' or 'LED'
	4 Remove the covers from the MOST tester 2+4 connector and the 2+4 loop harness connector
	5 Connect the 2+4 loop harness to the MOST tester 2+4 connector
	6 Operate the test switch and check the MOST tester beep/LED
	Did the MOST tester emit a tone or illuminate the LED? **Yes** Test passed. **GO to A4**. **No** Test failed. MOST tester or 2+4 harness fault
	A4: ADAPTER HARNESS AND PRISM TEST
	1 Set the MOST tester power switch to 'on'
	2 Set the connector selector switch to '2+0'
	3 Set the indication switch to 'beep' or 'LED'
	4 Remove the covers from the MOST tester 2+0 connector, the prism, and the adapter harness connectors
	5 Connect the adapter harness to the MOST tester 2+0 connector
	6 Connect the prism to the adapter harness
	7 Operate the test switch and check the MOST tester beep/LED
	Did the MOST tester emit a tone or illuminate the LED? **Yes** Test passed **No** Test failed. MOST tester, adapter harness or prism fault

NOTE:

When connecting the MOST tester, use the 2+0 or 2+4 socket as appropriate and set the connector selector switch to match the socket in use

PINPOINT TEST B : MOST NETWORK INITIAL TESTS	
TEST CONDITIONS	DETAILS/RESULTS/ACTIONS
B1: MOST NETWORK INITIAL TEST 1	
	1 Switch on the audio/video system
	2 Disconnect the MOST harness connector from the power amplifier
	3 Set the MOST tester power switch to 'on'
	4 Connect the MOST harness connector to the MOST tester
	5 Check the entertainment system on/off switch amber LED for indication of a MOST network fault
	Has the MOST network been restored? **Yes** The disconnected control module is causing the MOST network fault. GO to Pinpoint Test **E.** **No** The disconnected control module is not causing MOST network fault. **GO to B2**.
B2: MOST NETWORK INITIAL TEST 2	
	1 Check the MOST tester beep/LED
	Did the MOST tester emit a tone or illuminate the LED? **Yes** MOST signal received. The MOST network fault is located downstream of the MOST tester. GO to Pinpoint Test **C.** **No** MOST signal not received. The MOST network fault is located upstream of the MOST tester. Disconnect the MOST harness connector from the MOST tester and reconnect it to the control module. GO to Pinpoint Test **D.**

PINPOINT TEST C : MOST NETWORK DOWNSTREAM TESTS	
TEST CONDITIONS	DETAILS/RESULTS/ACTIONS
C1: MOST NETWORK DOWNSTREAM TEST 1	
	1 Disconnect the MOST harness connector from the audio head unit
	2 Direct the MOST harness connector at a suitable surface and check

	for the presence of red light
	Is red light present? **Yes** GO to Pinpoint Test **H.** **No** The fault is in the MOST harness between the MOST tester and the audio head unit. Install a new MOST harness as necessary

NOTE:

When connecting the MOST tester, use the 2+0 or 2+4 socket as appropriate and set the connector selector switch to match the socket in use

PINPOINT TEST D : MOST NETWORK UPSTREAM TESTS	
TEST CONDITIONS	DETAILS/RESULTS/ACTIONS
D1: MOST NETWORK UPSTREAM TEST 1	
	1 Refer to the electrical circuit diagrams and identify the preceding control module on the MOST network
	Is this control module the touch screen display? **Yes** GO to Pinpoint Test **F.** **No** **GO to D2**.
D2: MOST NETWORK UPSTREAM TEST 2	
	1 Disconnect the MOST harness connector from the control module
	2 Direct the MOST harness connector at a suitable surface and check for the presence of red light
	Is red light present? **Yes** The MOST network fault is in the control module or the MOST harness to the succeeding control module. **GO to D3**. **No** The MOST network fault is located upstream of the disconnected control module. Reconnect the MOST harness connector to the control module. **GO to D1**.
D3: MOST NETWORK UPSTREAM TEST 3	
	1 Connect the MOST harness connector to the MOST tester
	2 Check the entertainment system on/off switch amber LED for indication of a MOST network fault

	Has the MOST network been restored? **Yes** The disconnected control module is causing the MOST network fault. GO to Pinpoint Test **E.** **No** The fault is in the MOST harness between the MOST tester and the succeeding control module. Install a new MOST harness as necessary

NOTE:

When connecting the MOST tester, use the 2+0 or 2+4 socket as appropriate and set the connector selector switch to match the socket in use

PINPOINT TEST E : CONTROL MODULE TESTS	
TEST CONDITIONS	DETAILS/RESULTS/ACTIONS
E1: CONTROL MODULE TEST 1	
	1 Connect the MOST tester to the relevant control module using the adapter harness
	Did the MOST tester emit a tone or illuminate the LED? **Yes** MOST signal received. Tests inconclusive. Reconnect the MOST harness connector to the control module and confirm that the MOST network fault is still present. Repeat the tests from the beginning. GO to Pinpoint Test **B.** **No** **GO to E2**.
E2: CONTROL MODULE TEST 2	
	1 Refer to the electrical circuit diagrams and test the relevant control module power and ground circuits for open circuit, high resistance
	Are the power and ground circuits within specification? **Yes** **GO to E3**. **No** Repair the power and/or ground circuit
E3: CONTROL MODULE TEST 3	
	1 Reconnect the MOST harness connector to the control module
	2 Check the entertainment system on/off switch amber LED for indication of a MOST network fault
	Has the MOST network been restored? **Yes**

	Yes Tests inconclusive. Repeat the tests from the beginning. GO to Pinpoint Test **B.** **No** Install a new control module

PINPOINT TEST F : MOST NETWORK FINAL UPSTREAM TESTS	
TEST CONDITIONS	DETAILS/RESULTS/ACTIONS
F1: MOST NETWORK FINAL UPSTREAM TEST 1	
	1 Disconnect the MOST harness connector from the touch screen display
	2 Direct the touch screen display at a suitable surface and check for the presence of red light
	Is red light present? **Yes** The fault is in the MOST harness between the touch screen display and the succeeding control module. Install a new MOST harness as necessary **No** GO to F2.
F2: MOST NETWORK FINAL UPSTREAM TEST 2	
	1 Direct the MOST harness connector at a suitable surface and check for the presence of red light
	Is red light present? **Yes** GO to F3. **No** GO to F4.
F3: MOST NETWORK FINAL UPSTREAM TEST 3	
	1 Reconnect the MOST harness connector to the touch screen display
	2 Set the ignition switch to 'off'
	3 Set the ignition switch to 'on'
	Has the touch screen display operation been restored? **Yes** Tests inconclusive. Repeat the tests from the beginning. GO to Pinpoint Test **B.** **No** Install a new touch screen display
F4: MOST NETWORK FINAL UPSTREAM TEST 4	
	1 Disconnect the MOST harness connector from the audio head unit
	2 Direct the audio head unit at a suitable surface and check for the presence of red light

	Is red light present? **Yes** The fault is in the MOST harness between the audio head unit and the touch screen display. Install a new MOST harness as necessary **No** GO to Pinpoint Test **H.**

PINPOINT TEST G : BLANK SCREEN TESTS	
TEST CONDITIONS	DETAILS/RESULTS/ACTIONS
G1: BLANK SCREEN TEST 1	
	1 Refer to the electrical circuit diagrams and test the touch screen display power and ground circuits for open circuit, high resistance
	Are the power and ground circuits within specification? **Yes** GO to G2. **No** Repair the power and/or ground circuit
G2: BLANK SCREEN TEST 2	
	1 Set the ignition switch to 'off'
	2 Set the ignition switch to 'on'
	Has the touch screen display operation been restored? **Yes** Tests inconclusive. Repeat the tests from the beginning. GO to Pinpoint Test **B.** **No** Install a new touch screen display

PINPOINT TEST H : AUDIO HEAD UNIT TESTS	
TEST CONDITIONS	DETAILS/RESULTS/ACTIONS
H1: AUDIO HEAD UNIT TEST 1	
	1 Using the manufacturer approved diagnostic system, check the audio head unit for related DTCs
	Is communication possible between the manufacturer approved diagnostic system and the audio head unit? **Yes** Refer to the relevant DTC index **No** GO to H2.
H2: AUDIO HEAD UNIT TEST 2	
	1 Refer to the electrical circuit diagrams and test the audio head unit power and ground circuits for open circuit, high resistance

	power and ground circuits for open circuit, high resistance
	Are the power and ground circuits within specification? **Yes** GO to H3. **No** Repair the power and/or ground circuit
H3: AUDIO HEAD UNIT TEST 3	
	1 Using the manufacturer approved diagnostic system, perform a CAN network integrity test. Refer to the electrical circuit diagrams and test the medium speed CAN bus circuit for short circuit to ground, short circuit to power, open circuit, high resistance
	Is the medium speed CAN bus within specification? **Yes** Install a new audio head unit **No** Repair the medium speed CAN bus circuit

DTC INDEX

For a list of Diagnostic Trouble Codes (DTCs) that could be logged on this vehicle, please refer to Section 100-00.

REFER to: Diagnostic Trouble Code (DTC) Index - DTC: Module Name: Audio Front Control Module (100-00, Description and Operation).

2012.0 RANGE ROVER (LM), 418-00

MODULE COMMUNICATIONS NETWORK

CENTRAL JUNCTION BOX (CJB) (G1345589)

REMOVAL AND INSTALLATION

86.55.75	CENTRAL CONTROL MODULE - RENEW	ALL DERIVATIVES	0.1	USED WITHINS	+

REMOVAL

NOTE:

Removal steps in this procedure may contain installation details.

1. Refer to: Lower Glove Compartment (501-12, Removal and Installation).

2.

3. **NOTE:**

   The component cannot be removed at this stage.

   Torque: **10 Nm**

4.

INSTALLATION

1. To install, reverse the removal procedure.

WIRING HARNESSES

SPECIFICATIONS

Torque Specifications

DESCRIPTION	NM	LB-FT
Heated oxygen sensor harness heatshield bolt	10	7
Starter motor positive cable nut	12	9
Starter motor signal wire nut	4	3
Engine harness rear support bracket bolts	25	18

Engine harness rear support bracket bolts	25	18
Wiring harness support housing bolts	6	4
Engine RH and LH bank front cover earth bolts.	10	7

2012.0 RANGE ROVER (LM), 418-02

WIRING HARNESSES

DESCRIPTION AND OPERATION

APPROVED PROBING AND REPAIR METHODS

The purpose of this document is to identify the approved methods to promote an effective and efficient diagnosis and minor repair to the:

- permitted electrical wiring harnesses, connectors and cables
  - See Electrical Wiring Harness Repair.
- Media Orientated System Transport (MOST) network harnesses, connectors and fiber optic cables
  - See MOST Network Harness Repair.

REPLACEMENT REPAIR EQUIPMENT

The repair processes in the following information identifies specific repair equipment needed to complete a repair to the required standard.

Replacement repair equipment can be ordered from the equipment workshop website:

http://jlrequipment.service-solutions.com

ELECTRICAL CONNECTOR PROBING

Only 2 methods of electrical connector probing are allowed.

1. Probing at the rear of unsealed electrical connectors (see illustration E190832).

2. Probing on the conductor crimp of an extracted terminal (see illustration E190928).

- The conductor crimp is the portion crimped to the non-insulated wire.
- This method may be used on sealed or unsealed connectors, but method 1 is preferred for unsealed connectors.

CAUTIONS:

- A suitable sized probe must be used. If the probe is larger than the electrical connector aperture, then damage to the electrical connector will occur.
- The probe must only be inserted into the rear of the electrical connector for a distance sufficient to contact the terminal.
- Take care not to bend or distort any part of the metal terminal wire crimp area with the probe.
- Before extracting any terminals, refer to the **Electrical Connector Terminal Extraction** and **Extraction Tools** sections of this document for more information.
- Probing must **not** be carried out on; either the connector contact area or the portion of the terminal that is crimped to the insulated part of the wire.
- Make sure the terminal is correctly and securely located in the electrical connector after re-installation.

Method 1

Method 2

The following 2 methods of electrical connector probing are not allowed.

1. Probing at the rear of sealed electrical connectors (see illustration E190926).

2. Probing at the electrical connector contact area (see illustration E190927).

Method 1

Method 2

LIVE PROBING ON SEALED CONNECTORS

WARNINGS:

- **This procedure must never be carried out on any of the following. Failure to follow this instruction may result in personal injury;**
  - Supplemental Restraint System (SRS)
  - Pedestrian protection system
  - Throttle Control circuits
  - Speed Control circuits
  - Link lead assembles, which are unique to safety critical circuits such as Anti-lock Brake System (ABS) and thermocouple circuits.

An example of this is the ABS wheel speed sensors with molded connectors

- This procedure must only be carried on wire with a cross sectional area of 0.5mm squared or less.

CAUTIONS:

- The link lead used in this procedure must have a cross sectional area of at least 0.5mm squared.
- The battery ground cable must be disconnected before any electrical connectors are disconnected / reconnected.

1 Disconnect the battery ground cable.

2 **CAUTION:**

Before extracting any terminals, refer to the **Electrical Connector Terminal Extraction** and **Extraction Tools** sections of this document for more information.

Extract the terminal to be tested from the electrical connector

3 Insert a substitute wire with the the same terminal and cross sectional area of the previously extracted wire, into the vacated position of the electrical connector.

4 **CAUTION:**

The link lead clip must only be attached to the portion of the extracted terminal; that is crimped directly to the section of non-insulated wire.

Attach one end of the link lead to the original wire terminal.

5 **CAUTION:**

> The link lead clip must only be attached to the non-insulated section of the wire.

Attach the remaining end of the link lead to the substite wire.

6 Reconnect the electrical connector.

7 Reconnect the battery ground cable and begin the test.

ELECTRICAL WIRING HARNESS REPAIR

Repairs may only be made to cables and connectors which have been mechanically, not electrically damaged. It also applies where the whole extent of the damage can be clearly identified and rectified.

Care and neatness are essential requirements in making a perfect repair.

CAUTION:

> Under no circumstances should repair be attempted to the following:
>
> 1 Supplement Restraint System (SRS) firing circuits.
>
> 2 Pedestrian Protection System firing circuits.
>
> 3 Throttle Control circuits.
>
> 4 Speed Control circuits.
>
> 5 Link lead assembles, which are unique to safety critical circuits such as Anti-lock Brake System (ABS) and thermocouple circuits. An example of this is the ABS wheel speed sensors with molded connectors.
>
> 6 Screened cables, leads and wiring harness(s).

If any harness(s) with defective electrical connector terminals or cables from the above circuits give cause for concern, new components must be

installed.

CAUTIONS:

- Do not attempt to repair or reform a damaged electrical connector terminal. A damaged electrical connector terminal must be replaced using the correct pre-terminated lead.
- A ground point connector with multiple wires to the connector must not be repaired as a complete connector. If a damaged wire is identified, the wire can be repaired individually using the correct pre-terminated lead.
- Do not attempt the repair of damaged battery, hybrid and power cables.

  These types of cable generally have a cross sectional area larger than 6mm² and must only be replaced. If the original cable is contained within the harness bundle the original cable must be left in the harness and a replacement cable attached to the harness along the original harness route.

  The replacement cable must follow the original cable route to avoid the risk of introducing electrical interference issues. The original cable connections must be cut from the cable at both ends and discarded. The exposed cable ends must be free from sharp edges and strands of wire and must be over taped to prevent injury before being taped back to the main harness.

ELECTRICAL WIRING HARNESS REPAIR COMPONENTS

The electrical wiring harness repair components comprises of:

- Pre-terminated leads of different sizes and types
- Three sizes of splice connectors
- A selection of colored cable identification sleeves
- Two sizes of glue lined heat shrink sleeves

NOTE:

A suitable heat source, for shrinking the glue lined heat shrink sleeves will be required.

The pre-insulated diamond grip range of electrical connector terminals and in-line splice connectors are the only acceptable product for the repairs of wiring harnesses. The splice connectors not only grip the wire but also the insulation, making a very secure joint.

Pre-Terminated Lead and Splice Connectors

The pre-terminated lead(s) are supplied with the insulation in one of three colors, red, blue or yellow. The colors indicate the cable size range and not any particular circuit; refer to the Electrical Wiring Harness Repair Relationship Table in the Repair Methods section.

Splice connectors are also supplied with red, blue or yellow coverings, which must be matched to the pre-terminated lead insulation color.

For ease and speed, some of the pre-terminated lead(s) may already have the insulation partly stripped at the splice end. If the repair requires insulation to be stripped from the cable, refer to the Electrical Wiring Harness Repair Relationship Table in the Repair Methods section for the correct length of insulation to be stripped.

Wire Chart and Service Repair Information

This information is part of the relevant Electrical Reference Library (ERL) or Interactive Electrical Wiring Diagrams (iEWD) available through TOPIx.

NOTE:

Access to information about the pre-terminated leads for vehicles supported by the iEWD is achieved by hovering the screen pointer over the relevant connector number and left-clicking.

Once the relevant connector housing has been identified, refer to the associated Wire Chart and Service Repair Information to make sure the installation of pre-terminated leads or wiring harnesses are completed in the

approved manner.

- Identify the connector cavity in which the terminal needs replacing
- Make a note of the cross sectional area of the associated wire
- Make a note of the part number of the appropriate pre-terminated lead
- Make a note of the correct terminal extraction tool (where applicable)

Before commencing a wiring harness repair, always make sure the correct pre-terminated leads and associated repair parts have been ordered using the Jaguar/Land Rover parts ordering system.

Some of the pre-terminated leads have seals installed to the insulation for sealed connector applications. Where, as part of a repair, sealed terminals are removed, it is essential that those terminals are replaced by sealed pre-terminated leads.

Wire chart and service repair information also includes:

- The destination of the cable
- The applicable tools and associated other parts necessary to make sure the pre-terminated lead is correctly installed in the approved manner

CAUTIONS:

- Where the repair procedure indicates that a glue lined heat shrink sleeve should be applied, apply sufficient heat to the glue lined heat shrink sleeve to melt the glue in order to provide a water tight seal. Do not over heat the glue lined heat shrink sleeve so that the wiring harness insulation becomes damaged.
- Do not use any heat shrink sleeve other than the approved glue lined heat shrink sleeve specified in the repair procedure.

Glue Lined Heat Shrink Sleeving

Two sizes of glue lined heat shrink sleeving are available. Each heat shrink sleeve contains a sealant glue. These must be used when connecting wiring

harness(s) or electrical connector terminal(s) at all times. The smaller diameter glue lined heat shrink sleeve is to be used with the red and blue splice connectors and the larger diameter glue lined heat shrink sleeve with the yellow splice connectors.

Wiring Harness Cable Identification Sleeves

A selection of colored sleeves are available for maintaining the wiring harness cable identification on the pre-terminated lead.

The sleeve identification packs are available to suit the 3 cable size ranges of Red, Blue and Yellow. Each sleeve identification pack contains 50 of each of the following colored sleeves:

- Black
- Brown
- Red
- Orange
- Yellow
- Green
- Blue
- Violet
- Grey
- White

Place the correct colored sleeve(s) over the pre-terminated lead insulation as near to the electrical connector as possible with the main wiring harness cable color nearest to the electrical connector.

For example, if the original wiring harness cable color is green with a black trace, put the green wiring harness cable identification sleeve on the pre-terminated lead first, followed by a black sleeve, slide both sleeves along the wiring harness cable to the electrical connector terminal.

Wiring Harness Repair Parts

NOTE:

NOTE:

Repair components can be ordered via the Jaguar/Land Rover parts ordering system.

DESCRIPTION	PART NUMBER	QUANTITY
Glue Lined Heat Shrink Sleeve Pack – small diameter	418-104	25 per pack
Glue Lined Heat Shrink Sleeve Pack – larger diameter	418-105	10 per pack
Case Assembly Comprising – carry case, lid, inner lid, base, insert, trays foam spacers	418-106	1
Splice Connector – Red	418-107	50 per pack
Splice Connector – Blue	418-108	50 per pack
Splice Connector – Yellow	418-109	20 per pack
Sleeve Identification Pack – for Red insulation	418-112	500
Sleeve Identification Pack – for Blue insulation	418-113	500
Sleeve Identification Pack – for Yellow insulation	418-114	500

WIRING HARNESS REPAIR TOOLS

NOTE:

Replacement repair equipment can be ordered from the equipment workshop website; refer to the Replacement Repair Equipment in the Introduction section.

The wiring harness repair tools comprises of:

- A selection of extraction tools
- A wire cutter and insulation stripper
- Crimpers

Extraction Tools

The extraction tools are used to remove a terminal from an electrical connector. Refer to the Wire Chart and Service Repair Information for the correct extraction tool for each terminal (where applicable). Each extraction tool has been specially designed to extract a particular type of electrical connector terminal. The use of any other tool is not recommended and is liable to cause damage to the electrical connector.

CAUTION:

> Inspect the electrical connector housing for evidence of damage which may affect the security of a terminal inside the connector housing, the operation of the anti-backout device and the secure fitment of the connector housing to the intended component/connector housing. Replace a damaged electrical connector housing.

Insulation (Wire) Stripper

By pressing the outer edges of the wiring harness cable length stop together the adjuster can be slid up or down the jaw. This decreases or increases the length by which the cable insulation will be stripped from the pre-terminated lead or wiring harness cable.

NOTE:

> Some wiring harness insulation may be harder and require more effort to make a clean strip but exercise care not to damage the wire.

Insulation (Wire) Stripper

The adjuster has a position indicator to align with a graduated scale and this sets the correct length in millimeters, of insulation to be stripped. The amount of insulation to be stripped is shown in the Electrical Wiring Harness

amount of insulation to be stripped is shown in the Electrical Wiring Harness Repair Relationship Table.

The following illustration shows the insulation stripper tool and a wiring harness correctly gripped in the jaws. A wire cutter is provided on the outer side of the fixed jaw.

Cable Correctly Gripped in Stripper Blades

Crimpers

The crimpers have a moving jaw and a stationary jaw, with three different sized crimping enclosures. Each of the enclosures are identified by a red, blue or yellow colored dot which corresponds to the three colors of the pre-terminated leads and splice connector.

Crimpers

NOTE:

Replacement repair equipment can be ordered from the equipment workshop website; refer to the Replacement Repair Equipment in the Introduction section.

DESCRIPTION	PART NUMBER	QUANTITY
Crimpers	418-116A	1
Wire Stripper	418-672	1

APPROVED ELECTRICAL WIRING HARNESS REPAIR METHODS

CAUTION:

Several different types and sizes of terminal may be found in a single electrical connector housing.

electrical connector housing.

It is necessary to identify:

- The conductor (wire) size of the affected wiring harness
- The electrical connector range from which the damaged wiring harness is to be removed
- The electrical terminal type

Use of the approved diagnostic tool will greatly assist in the quick identification of electrical connectors and faulty pin terminal(s).

Reference can also be made to the ERL and iEWD available through TOPIx, to identify wiring harness(s) and electrical connector(s).

Use the Electrical Wiring Harness Repair Relationship Table to identify the correct splice connector to suit the wiring harness conductor (wire) size, which can be related to a suitable pre-terminated lead by the color of the insulation. The table also identifies the correct length of insulation to be stripped from the wiring harness lead.

Electrical Wiring Harness Repair Relationship Table

CABLE SIZE RANGE	SPLICE CONNECTOR	STRIP LENGTH
0.35 mm^2 to 1.50 mm^2	RED	6.00 to 7.00 mm
1.00 mm^2 to 2.50 mm^2	BLUE	6.00 to 7.00 mm
4.00 mm^2 to 6.00 mm^2	YELLOW	9.00 to 9.50 mm

Electrical Connector Terminal Extraction

It must be noted that some electrical connector(s) have anti-backout devices which prevent the terminals from being removed from the electrical connector. Some examples of these are shown in following illustrations. The anti-backout device must be released before attempting to remove the terminal from the electrical connector. Some anti-backout devices require a special tip to release the device. Please refer to the ERL for the correct tool(s) to use (where applicable).

Various types of electrical connector have seals installed internally or externally to prevent moisture ingress. These normally do not have to be removed but make sure that they are installed when the electrical connectors are connected.

CAUTION:

Inspect the electrical connector housing for evidence of damage which may affect the security of a terminal inside the connector housing, the operation of the anti-backout device and the secure fitment of the connector housing to the intended component/connector housing. Replace any damaged electrical connector housing.

The illustrations show examples of some of the common styles of extraction tools used on different types of electrical connector(s). Care should be exercised to avoid further damage when removing the terminals from the electrical connector.

NOTE:

Examples of the extraction tools and anti-backout devices.

A

B

C

D - 1

D - 2

E

F

G

H

I

J

K

L

M

N

TYPES OF ELECTRICAL WIRING HARNESS SPLICE REPAIRS

Splice connectors are available in 3 sizes; refer to Pre-Terminated Lead and Splice Connectors in the Electrical Wiring Harness Repair Components section.

A splice connector can be used in a number of ways to achieve an effective and robust wiring harness repair.

NOTE:

> For all repairs the wire being repaired must not be under any strain when the circuit is connected to the intended component or connector housing etc. If the wire is too short once the damage has been removed, it must be returned to the appropriate length. This requires inserting an extension wire into the center of the splice repair; refer to Double Splice Extension Repair.

The following information will show and explain the variations of splice joints achievable; these are:

- One Wire Splice Repair
- Two Wire Splice Repair
- Pulled Out Wire Splice Repair

- Damaged Splice Repair
- Double Splice Extension Repair
- Splice Repair to Wire Smaller than 0.35mm²

One Wire Splice Repair

If a wire has damage isolated to the wire only without any further damage to the terminal or connecter, the damaged portion of wire can be removed by cutting each side of the damaged area and reconnected using the appropriate splice connector.

One Wire Splice Repair Example

1 Original Wire

2 Original Wire

3 Splice Connector

4 Glue Lined Heat Shrink Sleeve

Two Wire Splice Repair

To repair wiring harnesses with damaged eyelets, use a splice connector with a suitable pre-terminated lead with the appropriate eyelet and wire size.

NOTES:

- If the damaged eyelet is from an interlocking pair, it is recommended to replace both eyelets.
- If any harness(s) with large multi wire ground eyelets give cause for concern, new components must be installed.

If the wiring harness has a damaged eyelet with two wires to the eyelet, it is recommended to use a suitable pre-terminated lead with a cross sectional

area equal to or greater than that of the 2 wires combined to complete the repair.

Two Wire Splice Repair Example

1 Pre-terminated Lead

2 Original Wire

3 Original Wire

4 Splice Connector

5 Glue Lined Heat Shrink Sleeve

Pulled Out Wire Splice Repair

If a wire has become disconnected from its splice, it can be repaired by splicing the disconnected wire to one of the wires still part of the original splice.

Cut the undamaged wire of the original splice and with a suitable splice connector, clamp the splice side of the wire. Fit a suitable section of glue lined heat shrink sleeve to the splice the wire had disconnected from. Insert the disconnected wire and the undamaged wire into the splice connector and clamp the splice connector.

Pulled Out Wire Splice Repair Example

1 Original Splice

2 Glue Lined Heat Shrink Sleeve

3 Original Undamaged Wire

4 Pulled Out Wire

5 Original Undamaged Wire

6 Splice Connector

7 Glue Lined Heat Shrink Sleeve

Damaged Splice Repair

If a wiring harness has splice which has been damaged, the splice must be removed and replaced.

Remove the damaged splice by cutting it from the wiring harness, making sure to leave as much undamaged wire as possible on the wiring harness. Using one or more suitable splice connectors make a new splice.

Damaged Splice Repair Example

1 Original Wire

2 Original Wire

3 Original Wire

4 Original Wire

5 Splice Connector

6 Glue Lined Heat Shrink Sleeve

Double Splice Extension Repair

If the wire(s) being repaired are too short once the damage area of wire has been removed, it is recommended to use 2 splice connectors and an appropriate length of wire with colored cable identification sleeves to return the wire its original length.

The extension wire must have the same or greater cross sectional area as the wire(s) combinations entering the splice connectors. Example: 2 wires x 0.5mm² cross sectional area + 2 wires x 0.75mm² cross sectional area would require a wire of 2.5mm² cross sectional area or greater.

Double Splice Extension Repair Example

1 Original Wire(s)

2 Original Wire(s)

3 Extension Wire

4 Splice Connector

5 Glue Lined Heat Shrink Sleeve

6 Splice Connector

7 Glue Lined Heat Shrink Sleeve

Splice Repair to Wire Smaller than 0.35mm²

To repair a damaged wire with a cross sectional area smaller than 0.35mm², it is recommended to use the smallest approved splice connector (red) and insert an additional wire with the wire being repaired into each side of the slice connector.

For each splice repair to a wire smaller than 0.35mm², an additional piece of wire (0.35mm² or 0.5mm²) must be inserted into the splice connector with the wire being repaired to make the joint secure when crimped. When the wires have been crimped into the splice connector, all additional wire(s) must be cut close to the splice connector to make sure the additional wire is fully covered when the glue lined heat shrink sleeve is fitted into position over the splice connector.

Splice Repair to Wire Smaller than 0.35mm² Example

1 Original Wire (less than 0.35mm²)

2 Additional wire (0.35mm² or 0.5mm²)

3 Pre-terminated Lead or replacement wire (less than 0.35mm²)

4 Additional wire (0.35mm² or 0.5mm²)

5 Splice Connector

6 Glue Lined Heat Shrink Sleeve

Repairs to Twisted Wires

The number of twists or turns of twisted pair wires is important to the functionality of the vehicle systems and as such must be maintained during a repair.

It is important to make sure that the number of turns over the repair length is counted at the start of the repair and the same number of turns reintroduced before fitting the terminals into the connector. If the original number of turns cannot be reintroduced on a Controller Area Network (CAN), the maximum length of 150mm of untwisted wire must not be exceeded.

WIRING HARNESS REPAIR PROCEDURE

Before starting any repair of a damaged wire, the damaged wire must be inspected along its length where possible to evaluate the full extent of the damage. If the damage is in a localized area the wire repair is recommended, if the damage is extensive, a replacement harness should be considered. A wire being repaired must be cut at a point where there is no damage to the wire or insulation.

NOTES:

- If the wire repair requires the use of a pre-terminated lead, the wire must not be cut more than 300mm from a connector housing.
- A repaired wire must not be under any strain when connected to its intended component/connector housing.

Where there is a need to repair more than one wire in a harness branch, the splices must be staggered to minimize the effect of increasing the diameter of the harness branch. The recommended spacing is 50mm between centers for yellow splices and 40mm between centers for red or blue splices.

CAUTIONS:

- Do not use crimpers, insulation (wire) strippers, splice connectors, heat shrink sleeves or pre-terminated leads or wiring harness(s) that

are not authorized and supplied via the Jaguar/Land Rover parts ordering system. Each part has been designed to be used only with the other parts available via the Jaguar/Land Rover parts ordering system.

- Where the repair procedure indicates that a glue lined heat shrink sleeve should be applied, apply sufficient heat to the glue lined heat shrink sleeve to melt the glue in order to provide a water tight seal. Do not over heat the glue lined heat shrink sleeve so that the wiring harness insulation becomes damaged.

There is no specific limit on the number of splices that can be used in a harness branch. The responsible technician must judge the number of splices that can be fitted along the available length of harness and within the space in which the harness is located.

Consideration must be given to any need to bend the harness and the risks of the repaired harness rubbing, squeaking or rattling against adjacent parts, body panels or trim.

Wiring Harness Repair Process

1 Remove the faulty terminal from the electrical connector using the correct extraction tool. Make sure that any anti-backout device is released before trying to remove the terminal.

2 **CAUTION:**

A number of electrical connector terminals are gold plated or gold flashed. When defective, they must be installed with a gold pre-terminated wiring harness(s). It is not always easy to identify the female as gold but the male pins are visually easier, therefore always check both male and female terminals to identify those which are gold. Under no circumstances are gold and tin terminals to be mixed as this will lead to early failure of the electrical contact.

NOTE:

Never use a harness lead with a smaller diameter than the original harness lead.

Select the correct size and type of pre-terminated wiring lead and splice connector; refer to Wire Chart and Service Repair Information.

3 Using the wire cutter on the insulation (wire) stripper, cut the pre-terminated wiring harness and the harness cable to the required length.

4 **NOTE:**

See illustration: Stripping Insulation

From the Electrical Wiring Harness Repair Relationship Table, find the correct length of insulation to be stripped from the pre-terminated lead and set the adjustable cable length stop to the correct length. Place the pre-terminated lead in the insulation (wire) stripper and remove the insulation.

5 Put the cable identification sleeve(s) on to the wiring harness with the main cable color nearest to the terminal.

6 During this next step take care only to close the crimpers far enough to hold the splice connector firmly in position. Place the selected splice connector in the crimpers, matching the aperture and the splice connector colors. Make sure that the window indentation in the splice connector is resting over the guide bar on the lower jaw. Partially close the grip until the splice connector is securely held in the aperture. This will give support to the splice connector while the wiring harness(s) are inserted into it.

7 **NOTE:**

See illustration: Splice Correctly Located

Insert the pre-terminated lead into the splice connector and make sure

that the wire is against the wire stop. Close the grip firmly, crimping the pre-terminated lead to the splice connector. When the handles have been completely closed the splice connector will be freed from the tool as the handles are released. If the handles have not been completely closed then the jaws will hold the splice connector and it cannot be removed from the tool.

8 Make sure that the wiring harness cable has been squarely cut and the correct length of insulation removed. If more than one splice is needed the splice connectors must be not be crimped to the wiring harness at the same distance from the connector. The splices must be staggered to prevent a bulk of splices in the same area of the wiring harness.

9 It is preferable to cover the splice joint with a glue lined heat shrink sleeve. This is desirable not essential, except where the electrical connector is a sealed electrical connector. Use the smaller diameter glue lined heat shrink sleeve for red and blue pre-terminated lead(s) and the large diameter glue lined heat shrink sleeve for the yellow pre-terminated lead(s). It is advisable to place the heat shrink sleeve over the completed joint but in some instances the glue lined heat shrink sleeve will not pass over the terminal. Check, and if required, place the correct size glue lined heat shrink sleeve onto the harness cable or pre-terminated lead before crimping the splice to the wiring harness.

10 Place the harness cable into the splice with the splice window over the guide bar. Make sure that the harness cable is against the stop in the splice, crimp the splice connector to the wiring harness.

11 Gently pull the harness cables each side of the splice connector to make sure that a secure joint has been made.

12 **WARNING:**

Do not use a naked flame in areas where fuel or oil have been spilt. Clean the area of residual oil and fuel and wait until the fuel spill has fully evaporated.

CAUTIONS:

- When using a heat source make sure that it is localized and causes no damage to surrounding materials.
- Where the repair procedure indicates that a glue lined heat shrink sleeve should be applied, apply sufficient heat to the glue lined heat shrink sleeve to melt the glue in order to provide a water tight seal. Do not over heat the glue lined heat shrink sleeve so that the wiring harness insulation becomes damaged.

Using a suitable heat source, shrink the sleeve over the splice.

13 If further pre-terminated lead(s) are to be installed to the same electrical connector, make sure that the lead is cut at a different length to the previous joint. This makes sure that the splices will, where possible, be staggered on the wiring harness and prevent a bulk of splices in one area.

14 When all of the splices have been made, fit the terminal(s) to the electrical connector, taking care that the terminals are correctly orientated.

15 Install the wiring harness cover and secure with adhesive electrical tape. Do not cover the wiring harness right to the electrical connector as the terminals must have a little movement and not be firmly bound to the electrical connector or wiring harness. Make sure that the cable identification sleeve(s) are showing at the wiring harness electrical connector.

Stripping Insulation

Splice Correctly Located

If a fibre optic cable is damaged, it must not be repaired and must be replaced with a new cable.

Replacement fibre optic cables can only be made using the approved repair equipment and components.

The approved repair kit contains the specially designed fiber optic conductor strippers, which are used to prepare 2.3mm fiber optic cable for the fitment of the brass fiber optic conductor contact. The fiber optic conductor contact crimping pliers must then used be used to crimp the brass contact to the fiber optic conductor core. The approved crimping pliers supply the appropriate pressure to the brass contact to make a secure contact, but not damage the conductor core.

The cut face of the fiber optic core must be protected from damage and contamination at all times.

CAUTION:

Fiber optic cables have a maximum bending radius 25mm and must not be kinked or excessively bent.

The performance of fibre optic cables is very dependant upon the quality of the cut surface at connections and to the bending radius of the cables.

MOST HARNESS REPAIR COMPONENTS AND TOOLS

List of Parts

NOTE:

Repair components can be ordered via the Jaguar/Land Rover parts ordering system.

DESCRIPTION	PART NUMBER	QUANTITY
Fiber Optic Conductor Lead	418-676	1
Fiber Optic Conductor Contact	418-677	20

Fiber Optic Conductor Contact Protective Cap	418-678	20
Fiber Optic Conductor Lead Connector - Inner	418-679	10
Fiber Optic Conductor Lead Connector - Outer	418-680	10
MOST Module Protective Cap	418-681	20
Fiber Optic Conductor Lead Connector Protective Cap	418-682	20

Fiber Optic Conductor Stripper

Fiber Optic Conductor Stripper Jaw Positions

1	Fiber Optic Cable Cutter
2	Fiber Optic Cable Insulation Stripper
3	Fiber Optic Core Cutter

Fiber Optic Core Cutter Locking Screw

The fiber optic core cutter has a locking screw to protect the cutter wheel when in transit or not in use. A hexagonal key is supplied in the MOST repair kit to release the locking screw.

NOTE:

Tighten the transportation locking screw after use.

Fiber Optic Core Cutter Remaining Cut Indicator

The fiber optic core cutter can be used for approximately 1260 cuts. The indicator line on the remaining cut indicator window only becomes visible when the fiber optic core cutter has 150 cuts or below available.

NOTE:

> When the fiber optic core cutter has reached the maximum allowed cuts, the cutter will become locked and the fiber optic conductor stripper must then be renewed.

Before using the fiber optic conductor core cutter, make sure it has enough cuts remaining to complete the repair process by viewing the remaining cut indicator.

Fiber Optic Conductor Contact Crimping Pliers

A small amount of effort is required to operate the fiber optic conductor contact crimping pliers and secure a fiber optic conductor contact to the fiber optic conductor core.

The new fiber optic conductor contact is placed into the cramping mechanism in the head of the pliers and the locking arm is repositioned to hold the conductor contact securely in position. The locking arm must locate on to the retaining pin.

The prepared end of the fiber optic core is then inserted into the new conductor contact.

The fiber optic core and conductor contact must be pushed and held against the spring pressure in the cramping mechanism. The grips of the fiber optic conductor contact crimping pliers are then be closed, cramping the conductor contact to the conductor core.

NOTES:

- Only use the approved fiber optic conductor contact crimping pliers to cramp a new conductor contact.
- A conductor contact must only be cramped once using the fiber optic conductor contact crimping pliers.

The cramping mechanism inside the head applies the appropriate pressure to the conductor contact at 4 points. This makes a secure contact and does not damage the conductor core.

When the new conductor contact has been cramped to the fiber optic core, make sure the fiber optic core end sits 0.01mm to 0.1mm below the height of the conductor contact end.

NOTE:

Make sure the fiber optic conductor lead contact remains clean and protected at all times. Fit a fiber optic conductor contact protective cap.

MOST Repair Tools

NOTE:

Replacement repair equipment can be ordered from the equipment workshop website; refer to the Replacement Repair Equipment in the Introduction section.

DESCRIPTION	PART NUMBER	QUANTITY

WIRING HARNESSES

WIRING HARNESS REPAIR

(G1341843)

GENERAL PROCEDURES

1. For additional information, refer to: Wiring Harness (418-02 Wiring Harnesses, Description and Operation).

2012.0 RANGE ROVER (LM), 418-02

WIRING HARNESSES

ENGINE WIRING HARNESS – V8 S/C 5.0L PETROL (G1234951)

REMOVAL AND INSTALLATION

86.70.17	WIRING HARNESS – ENGINE	5000 CC, AJ V8, SUPERCHARGED	3.1	USED WITHINS	+

REMOVAL

NOTES:

- Removal steps in this procedure may contain installation details.
- Some illustrations may show vehicles without supercharger, but the essential information shown is always correct.

1. Refer to: Specifications (414-00, Specifications).

2. **WARNING:**

   Make sure to support the vehicle with axle stands.

   Raise and support the vehicle.

3. Secure the hood in the service position.

4. Refer to: Air Cleaner Outlet Pipe LH (303-12, Removal and Installation).

5. Refer to: Air Cleaner Outlet Pipe RH (303-12, Removal and Installation).

6. Refer to: Plenum Chamber (412-01, Removal and Installation).

7. Refer to: Exhaust System (309-00, Removal and Installation).

8. **NOTE:**

   Remove and discard the gasket.

Torque: **48 Nm**

9. **NOTE:**

Remove and discard the gasket.

Torque: **48 Nm**

10.

11. **WARNING:**

Do not smoke or carry lighted tobacco or open flame of any type when working on or near any fuel related components. Highly flammable vapors are always present and may ignite. Failure to follow these instructions may result in personal injury.

CAUTION:

Be prepared to collect escaping fuel.

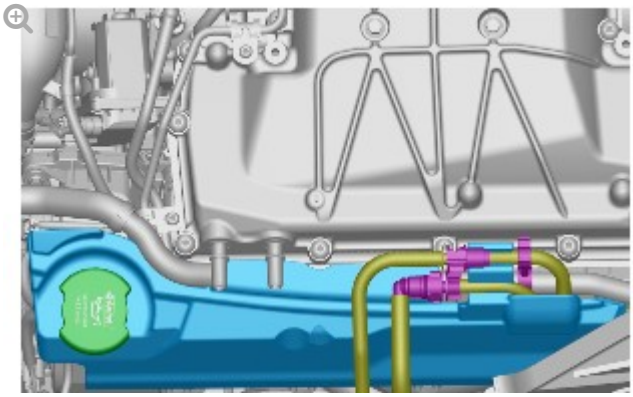

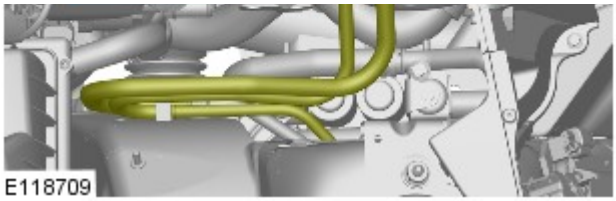

12.

NOTE:

RHD illustration shown, LHD is similar.

13.

14.

15.

NOTE:

Make sure the electrical connector is correctly secured.

16.

17.

18.

19.

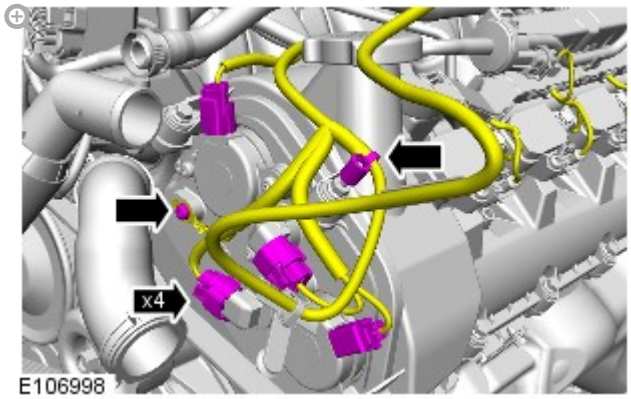

Torque: **10 Nm**

20.

21.

22.

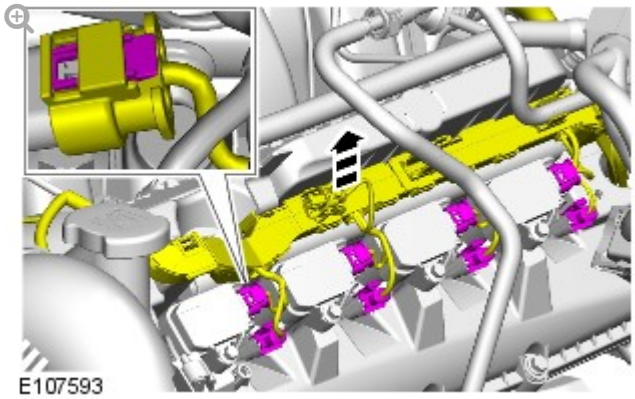

23.

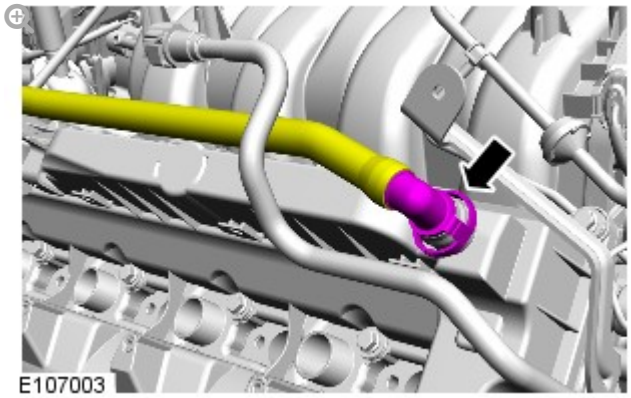

24.

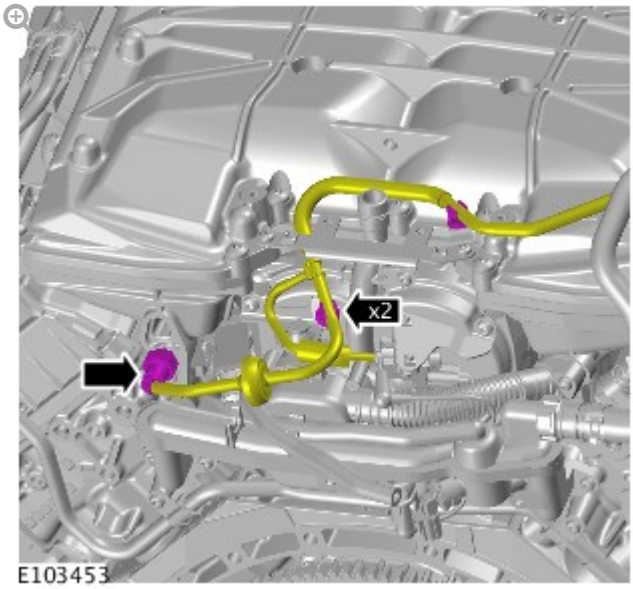

25.

26.

27.

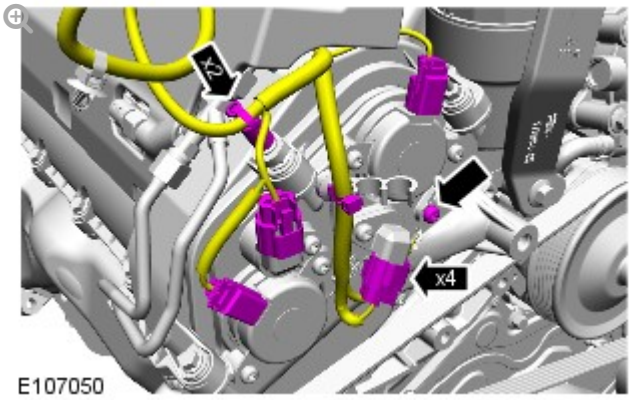

Torque: **10 Nm**

28.

29.

Torque: **6 Nm**

30.

31.

Torque: **10 Nm**

32.

NOTE:

RHD illustration shown, LHD is similar.

Torque: **47 Nm**

33.

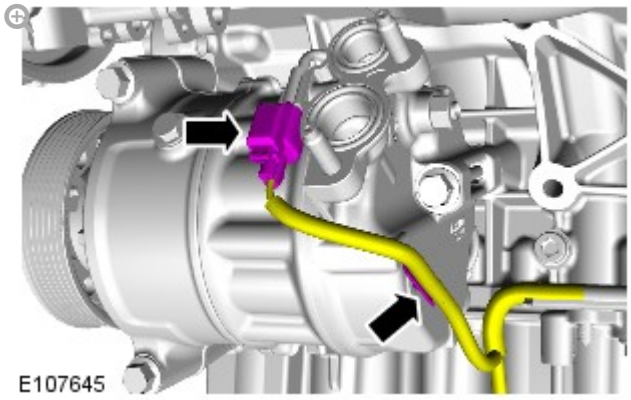

34.

35.

36.

37.

Torque: **48 Nm**

38.

39.

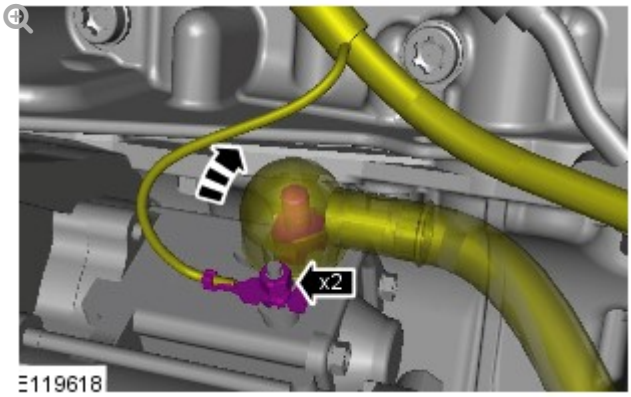

Torque:

M8 **10 Nm**

M6 **4 Nm**

40.

41.

42.

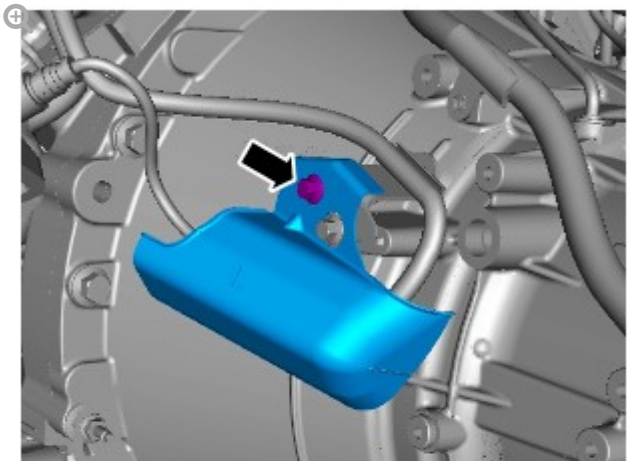

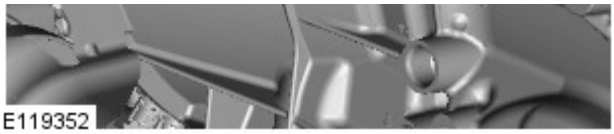

Torque: **10 Nm**

43.

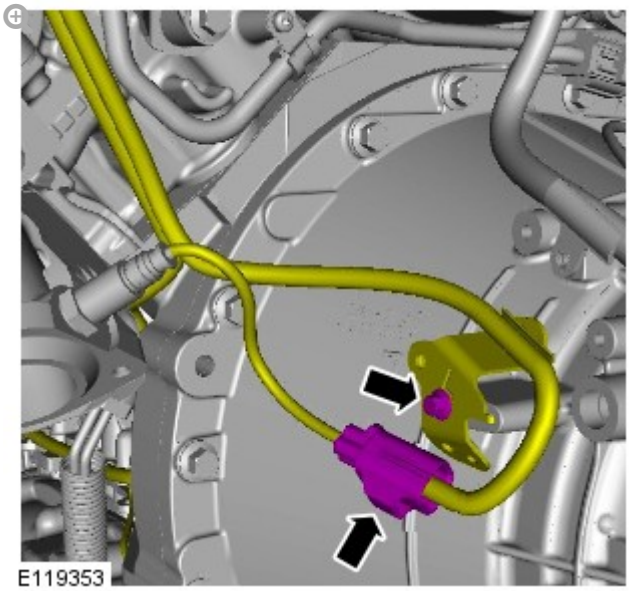

Torque: **10 Nm**

44.

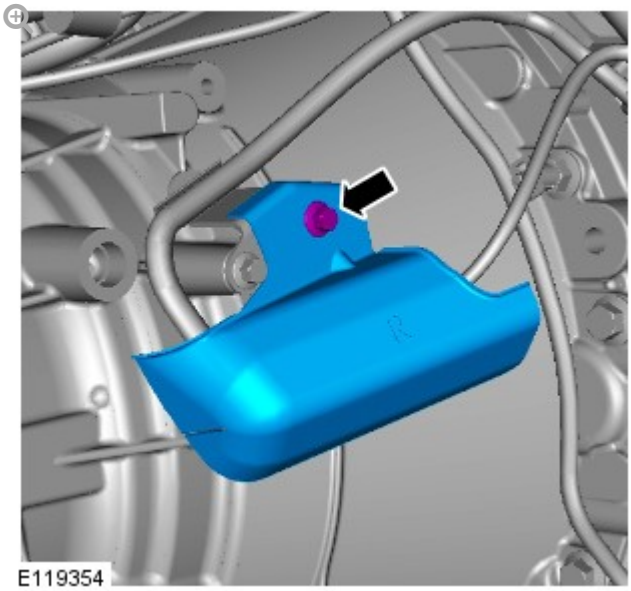

Torque: **10 Nm**

45.

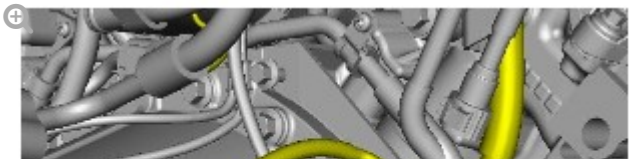

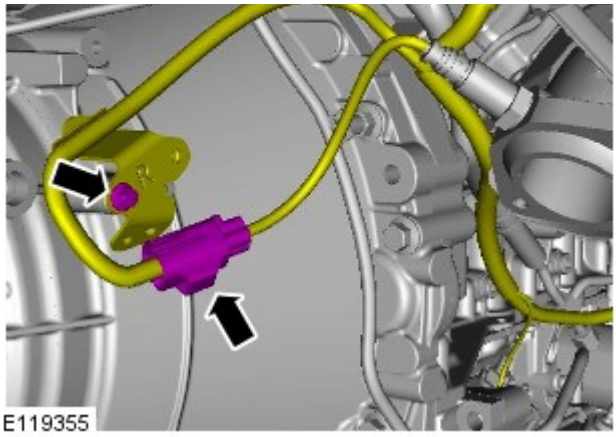

Torque: **10 Nm**

46.

47.

NOTE:

RHD illustration shown, LHD is similar.

INSTALLATION

1.

NOTE:

After the engine harness has been installed, test using Land Rover/ Jaguar approved diagnostic equipment.

To install, reverse the removal procedure.

WIRING HARNESSES

FRONT PARKING AID CAMERA WIRING HARNESS - FRONT SECTION (G1371948)

REMOVAL AND INSTALLATION

REMOVAL

CAUTION:

Make sure that the camera overlay wiring harness is not bent excessively during this procedure. Failure to follow this instruction may result in damage to the harness.

1. **WARNING:**

Make sure to support the vehicle with axle stands.

Raise and support the vehicle.

2. Remove the RH front wheel.

3. Remove the front RH wheel arch liner.
For additional information, refer to: Fender Splash Shield (501-02 Front End Body Panels, Removal and Installation).

4. **NOTE:**

Left-hand shown, right-hand similar.

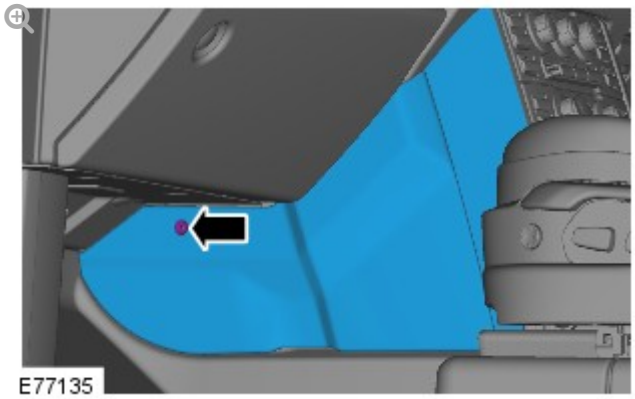

Remove the right hand floor console extension.

- Remove the screw.
- Release the 2 clips.

5. **NOTE:**

Left-hand shown, right-hand similar.

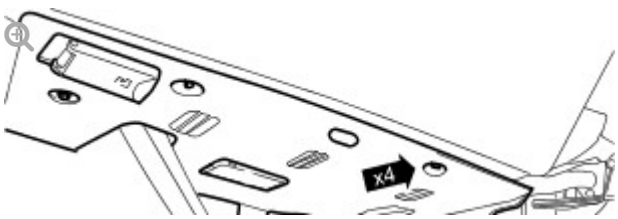

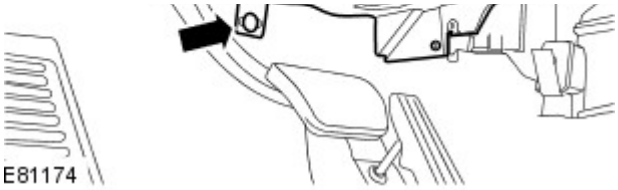

Release the right hand closing trim panel.

- Remove the 4 screws.
- Remove the clip.

6.

NOTE:

Left-hand shown, right-hand similar.

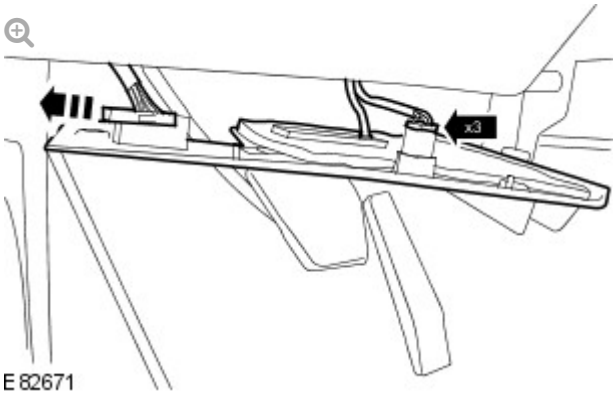

Remove the right hand closing trim panel.

- Disconnect the 2 electrical connectors.
- Release the vehicle diagnostic socket.

7.

NOTE:

Right hand drive vehicles only.

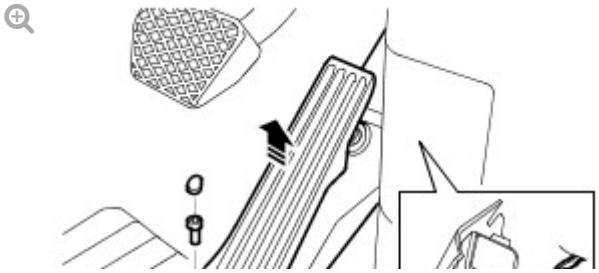

Remove the throttle pedal assembly.

- Remove the bolt cover.
- Remove the bolt.
- Disconnect the electrical connector.

8.

NOTE:

All vehicles.

Remove the cowl side trim panel. For additional information, refer to: Cowl Side Trim Panel (501-05 Interior Trim and Ornamentation, Removal and Installation).

9.

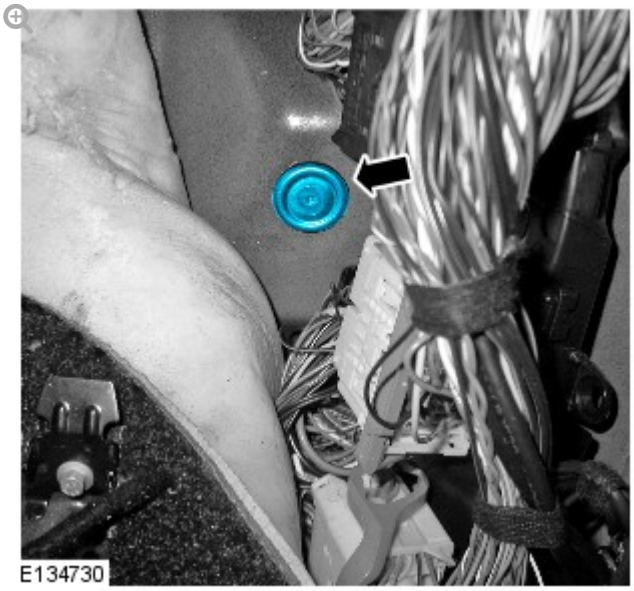

Remove the grommet.

- Reposition the floor carpet.

10.

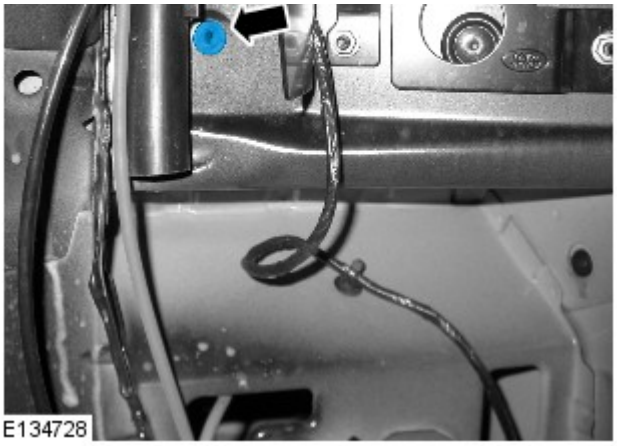

Remove the grommet.

11.

NOTE:

The left hand front camera wiring harness connectors are coloured white, the right hand front camera wiring harness connectors are coloured black.

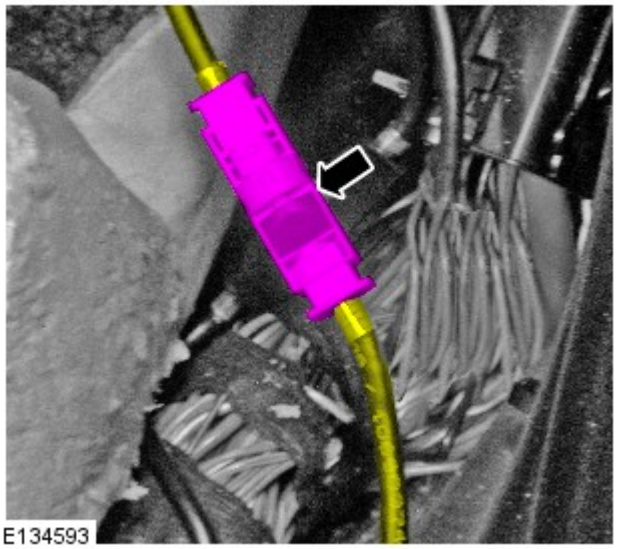

Disconnect the camera wiring harness.

12.

NOTE:

The left hand front camera wiring harness connectors are coloured white, the right hand front camera wiring harness

connectors are coloured black.

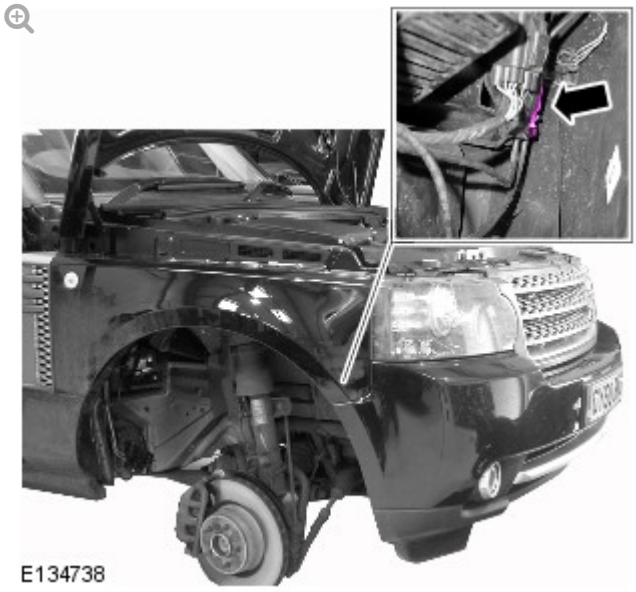

Disconnect the camera wiring harness.

13.

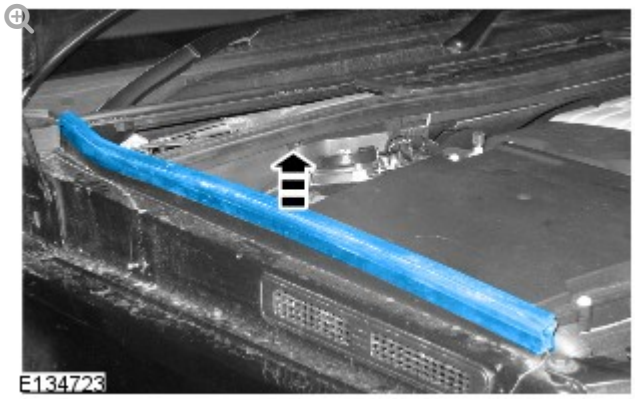

Remove the hood seal.

14.

Release the hood seal.

INSTALLATION

1.

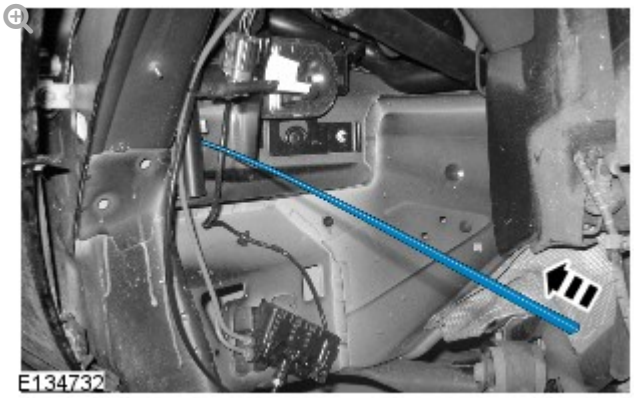

Install a suitable rod through the both holes.

2.

NOTE:

Some variation in the illustrations may occur, but the essential information is always correct.

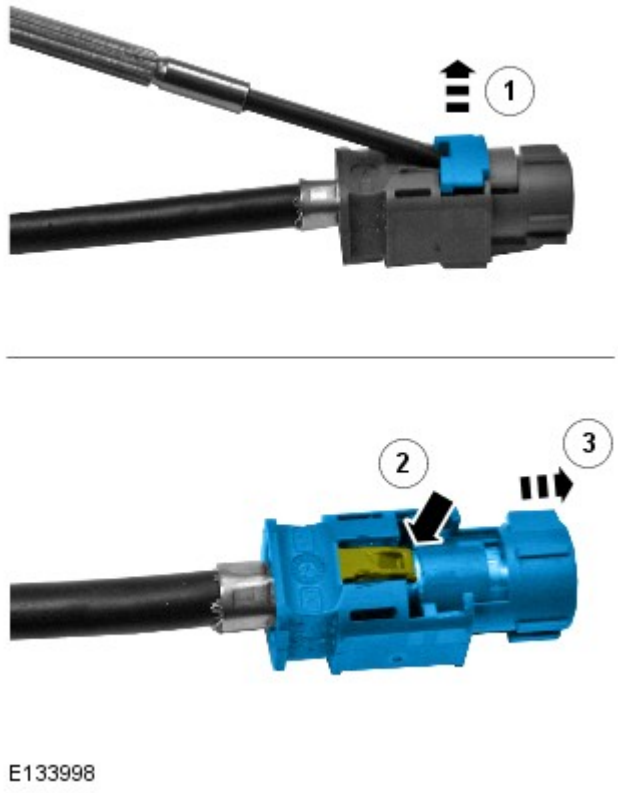

Remove the connectors from the camera overlay wiring harness.

- Remove the locking tab.
- Carefully release the clip.
- Apply suitable tape to protect the end of the camera overlay wiring harness.

3.

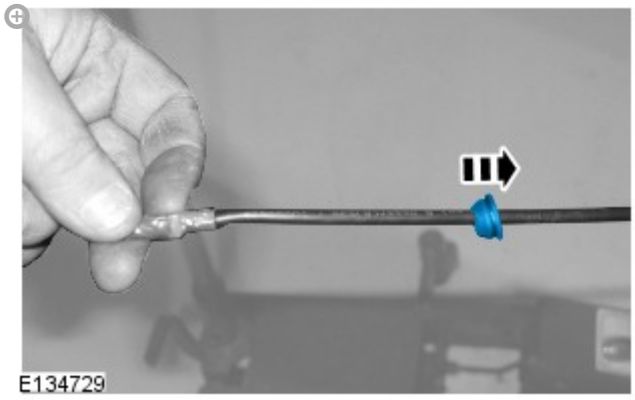

Using a suitable tool, install the grommet to the camera overlay wiring harness.

- Using a suitable tool, make a hole in the centre of the grommet.

4.

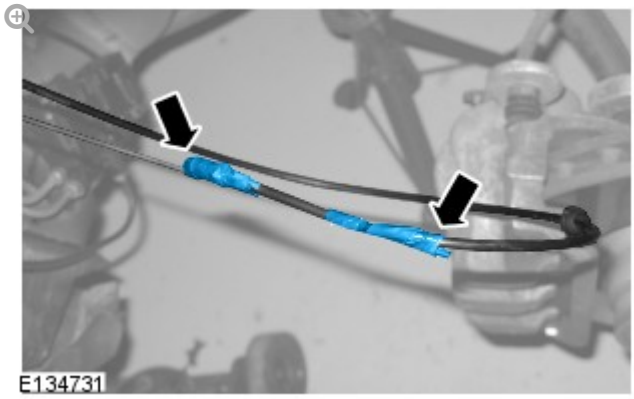

Using suitable tape, secure the camera overlay wiring harness to the end of the rod in the wheel arch area.

5.

CAUTION:

Make sure that the camera overlay wiring harness is not bent

excessively during this procedure. Failure to follow this instruction may result in damage to the harness.

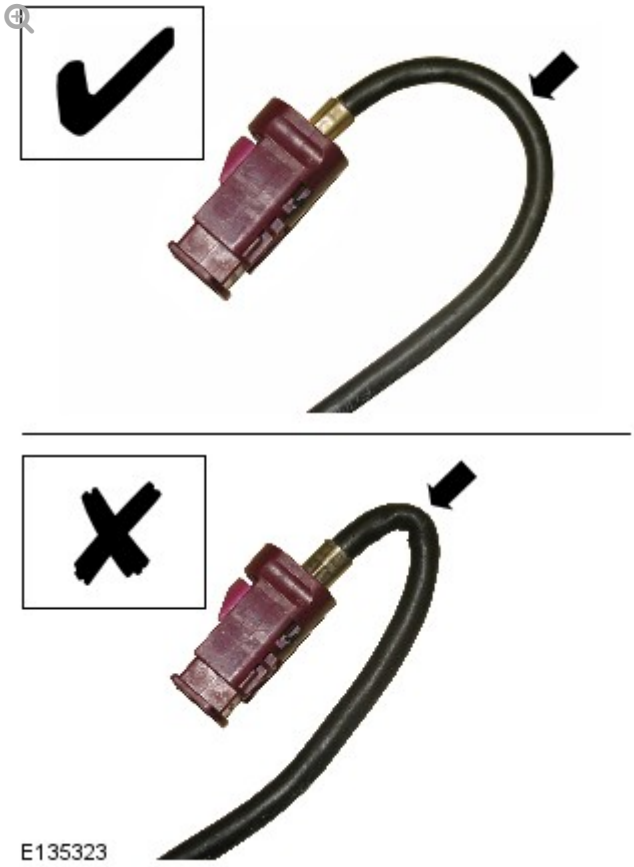

Install the camera overlay wiring harness.

6.

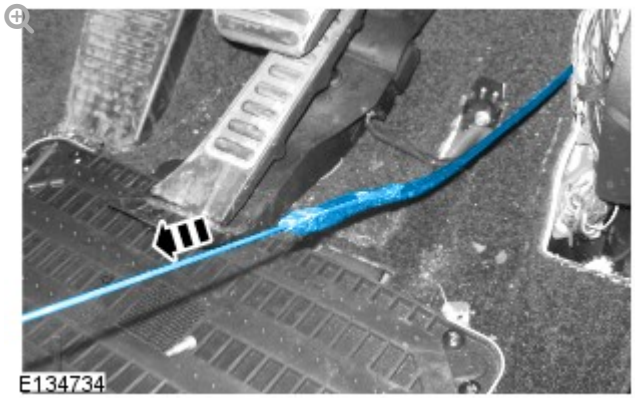

Install the camera overlay wiring harness through the 2 holes.

- Carefully pull the rod through in to the foot well area until the camera overlay wiring harness is through both holes.
- Release the rod from the camera overlay wiring harness.

7.

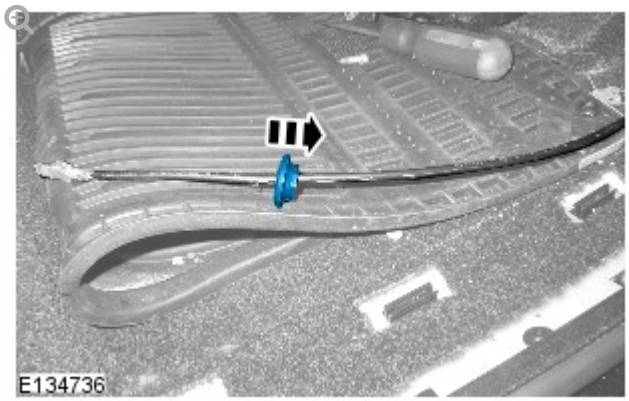

Using a suitable tool, install the grommet to the camera overlay wiring harness.

- Using a suitable tool, make a hole in the centre of the grommet.

8.

NOTE:

Some variation in the illustrations may occur, but the essential information is always correct.

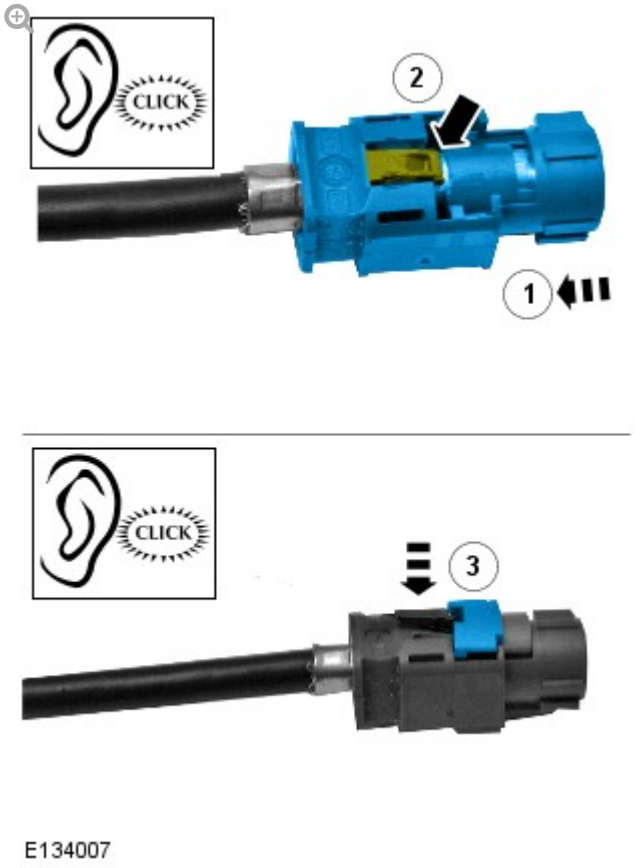

Install the connector to the camera overlay wiring harness.

- Remove the protective tape.
- Install the electrical connector.
- Secure the locking tab.

9.

NOTE:

The left hand front camera wiring harness connectors are coloured white, the right hand front camera wiring harness connectors are coloured black.

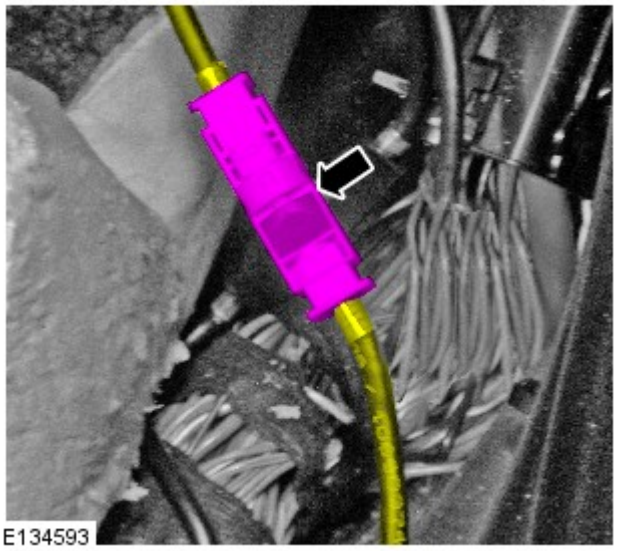

Connect the camera overlay wiring harness.

10.

Secure the grommet.

11.

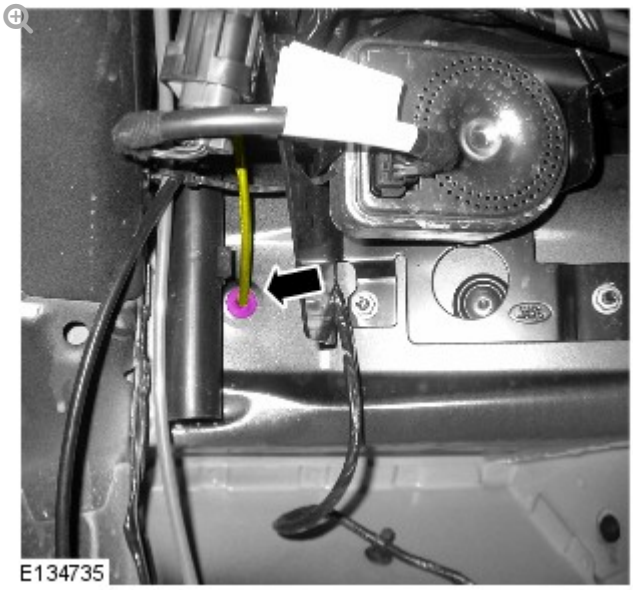

Secure the grommet.

12.

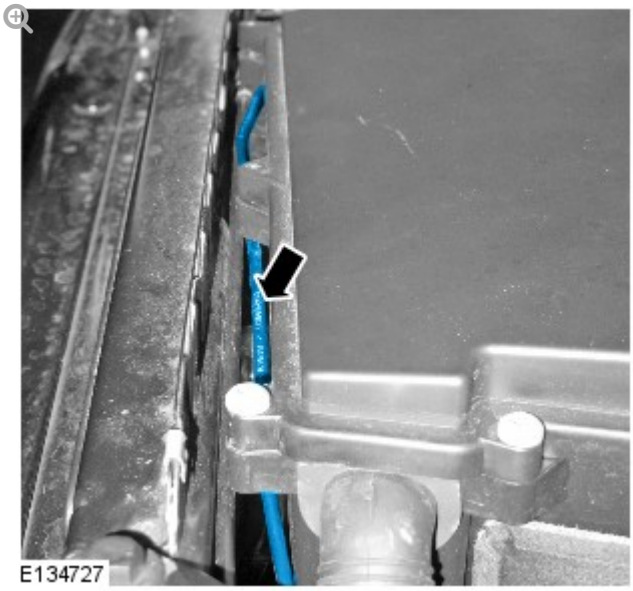

Feed the camera overlay wiring harness along the existing engine compartment wiring harness to the RH front of the bumper.

13.

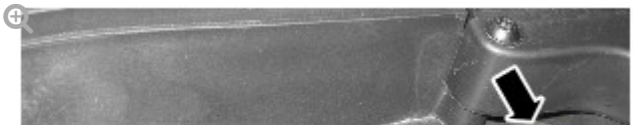

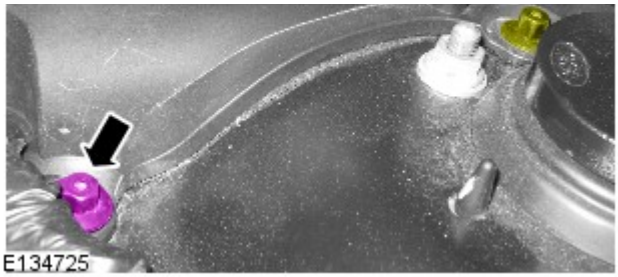

Release the bracket.

- Remove the nut.
- Release the nut.

14.

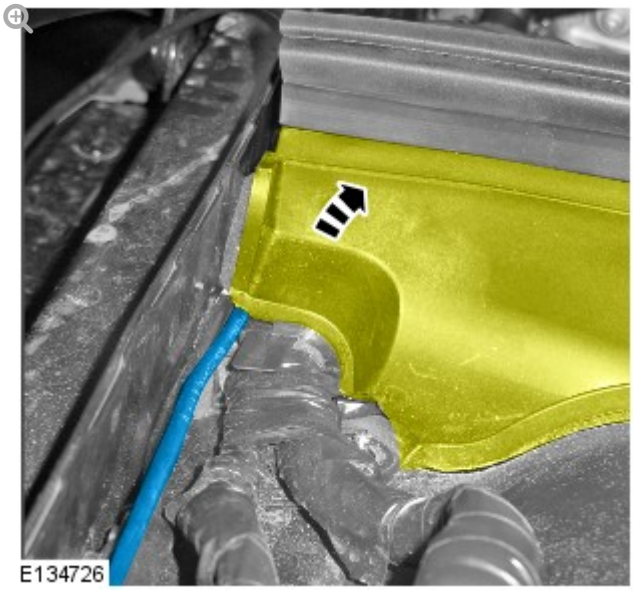

Carefully feed the camera overlay wiring harness under the bracket.

15.

Secure the bracket.

- Tighten the nuts.

16.

Secure the hood seal.

17.

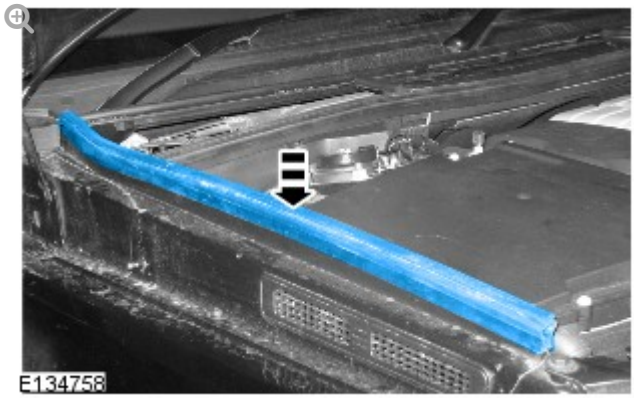

Install the hood seal.

18.

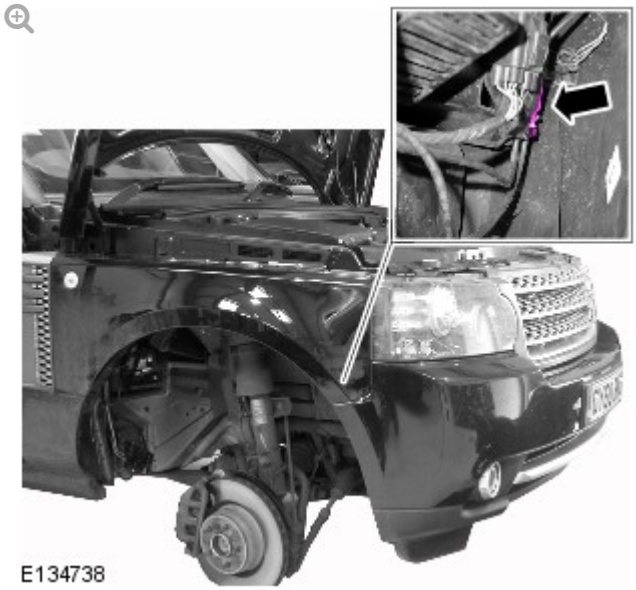

Connect the camera overlay wiring harness.

19.

CAUTION:

CAUTION:

> Make sure that any tie straps used are not tightened excessively on the camera wiring harness and link leads, Failure to follow this instruction may result in damage to the harness.

Using suitable tie straps, secure the camera overlay wiring harness to the main body wiring harness.

20.

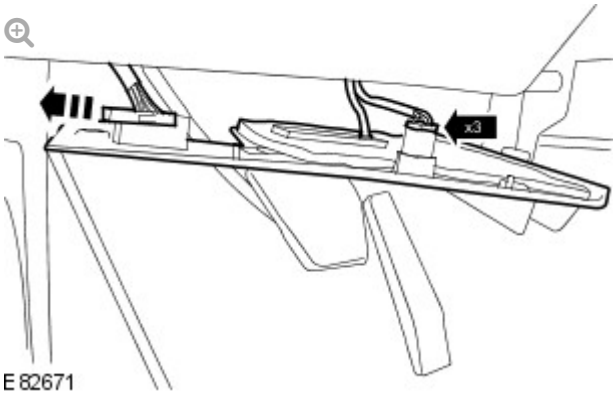

Install the right hand closing trim panel.

- Secure the vehicle diagnostic socket.
- Connect the 2 electrical connectors.

21.

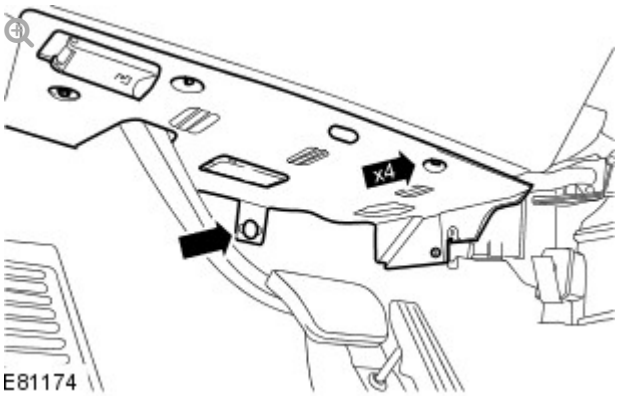

Secure the right hand closing trim panel.

- Secure the clip.
- Install the 4 screws.

22.

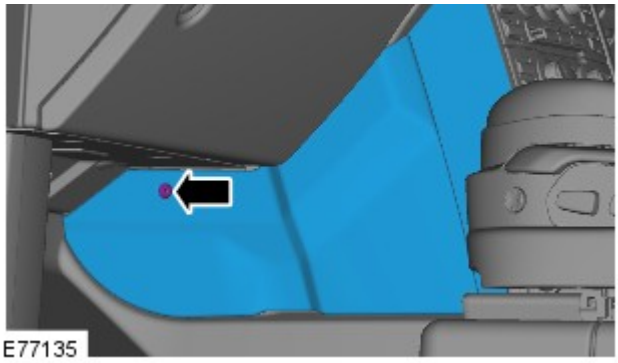

Install the right hand floor console extension.

- Secure the 2 clips.
- Install the screw.

23. Install the cowl side trim panel. For additional information, refer to: Cowl Side Trim Panel (501-05 Interior Trim and Ornamentation, Removal and Installation).

24.

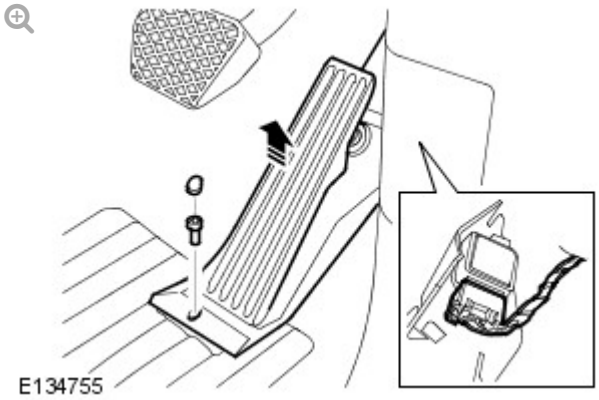

Install the pedal assembly.

- Connect the electrical connector.
- Install and tighten the bolt.

Install the bolt cover.

25. Install the front RH wheel arch liner.

26. Install the RH front wheel.

WIRING HARNESSES

RIGHT HAND PARKING AID CAMERA WIRING HARNESS

(G1371949)

REMOVAL AND INSTALLATION

REMOVAL

CAUTION:

Make sure that the camera overlay wiring harness is not bent excessively during this procedure. Failure to follow this instruction may result in damage to the harness.

1. Remove the LH B-pillar trim panel.
   For additional information, refer to: B-Pillar Trim Panel (501-05 Interior Trim and Ornamentation, Removal and Installation).

2. Repeat procedure for the other side.

3. 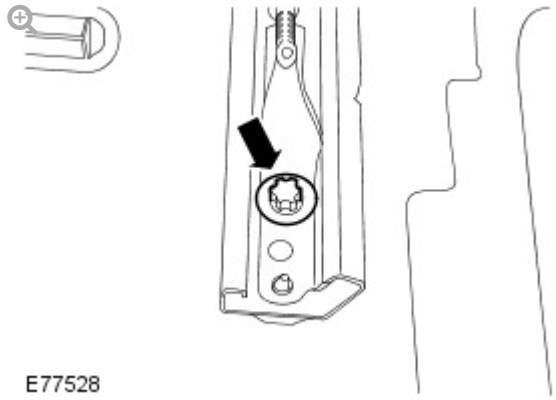

Remove the 2 rear bolts from the LH front seat.

4.

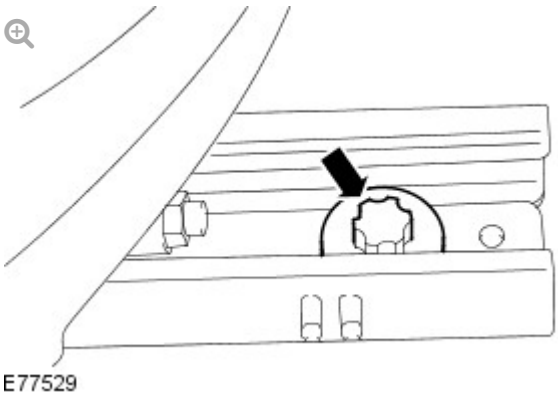

Release the LH front seat.

- Move the LH front seat fully backwards.
- Remove the 2 front seat front bolts.

5. Remove the RH front seat.
For additional information, refer to: Front Seat (501-10 Seating, Removal and Installation).

6.

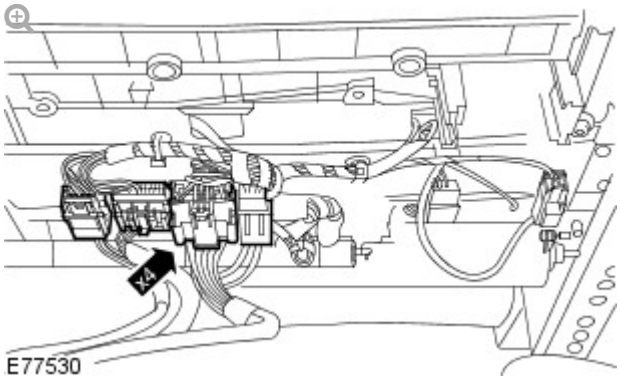

With assistance remove the LH front seat.

- Disconnect the 4 electrical connectors.

7.

NOTE:

Left-hand shown, right-hand similar.

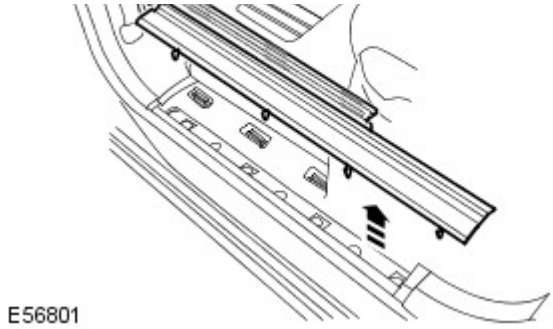

Remove the front scuff plate trim panel.

- Release the 7 clips.
- Repeat to the other side.

8.

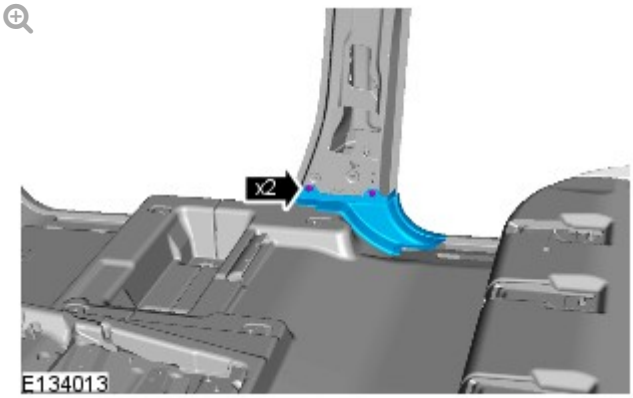

Remove the B-pillar floor covering trim panel.

- Remove the 2 clips.
- Repeat to the other side.

9.

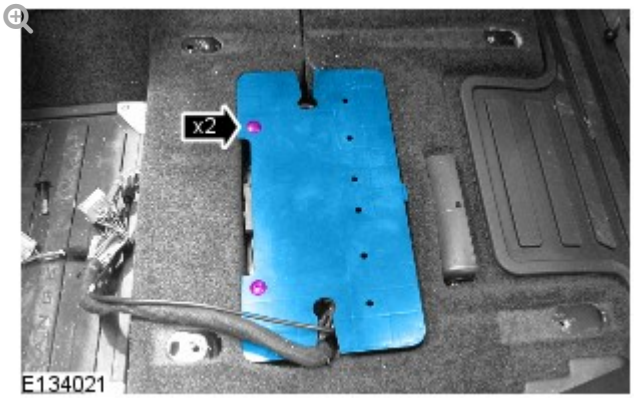

Remove the parking aid camera module cover.

- Remove the 2 scrivets.
- Repeat to the other side.

- Repeat to the other side.

10.

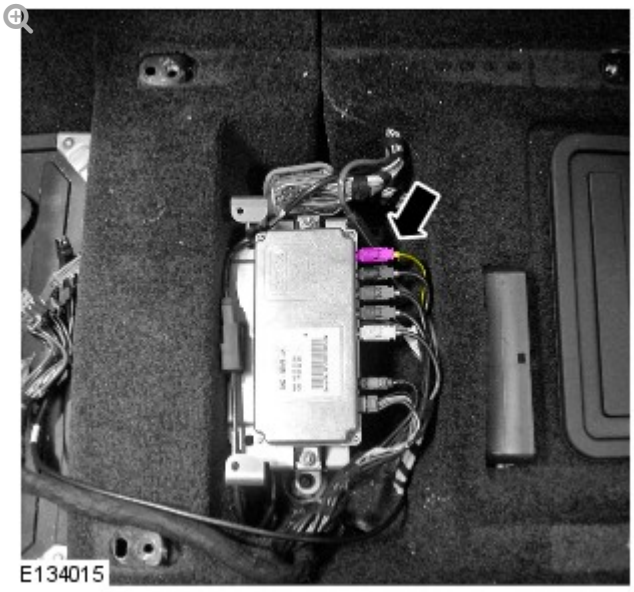

Disconnect the camera wiring harness.

11.

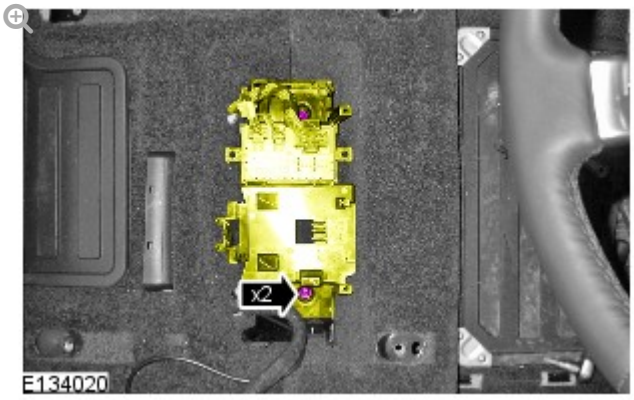

Release the seat heating module bracket.

- Remove the 2 nuts.

12.

NOTE:

Left-hand shown, right-hand similar.

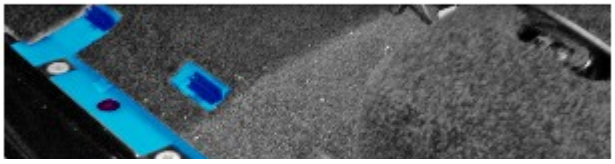

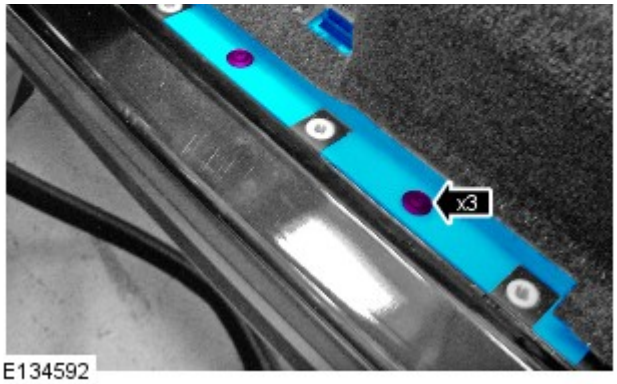

E134592

Remove the RH wiring harness cover.

- Remove the 3 clips.

13. Remove the cowl side trim panel.For additional information, refer to: Cowl Side Trim Panel (501-05 Interior Trim and Ornamentation, Removal and Installation).

14. **NOTE:**

Door shown removed for clarity.

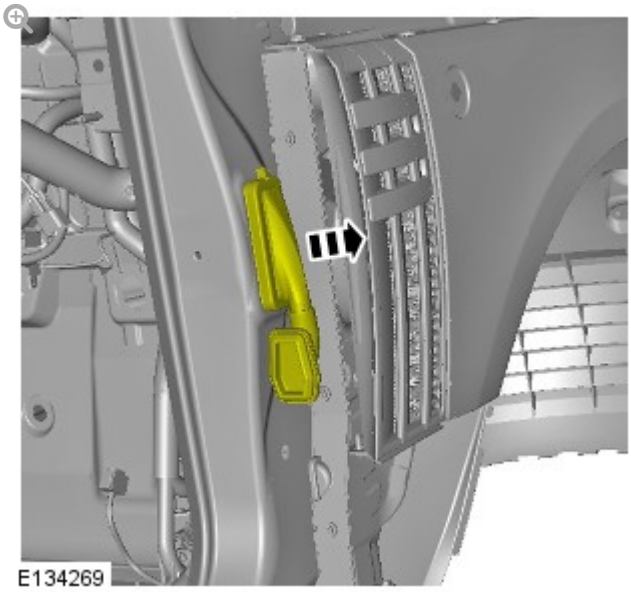
E134269

Release the gaiter.

15.

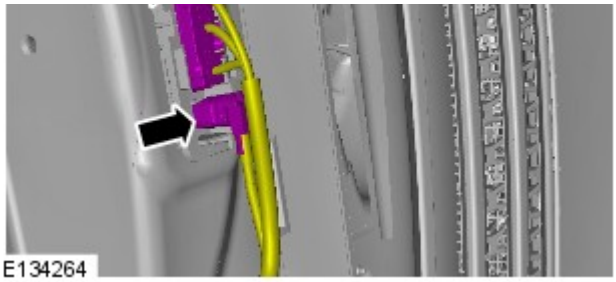

Disconnect the 2 electrical connectors.

16.

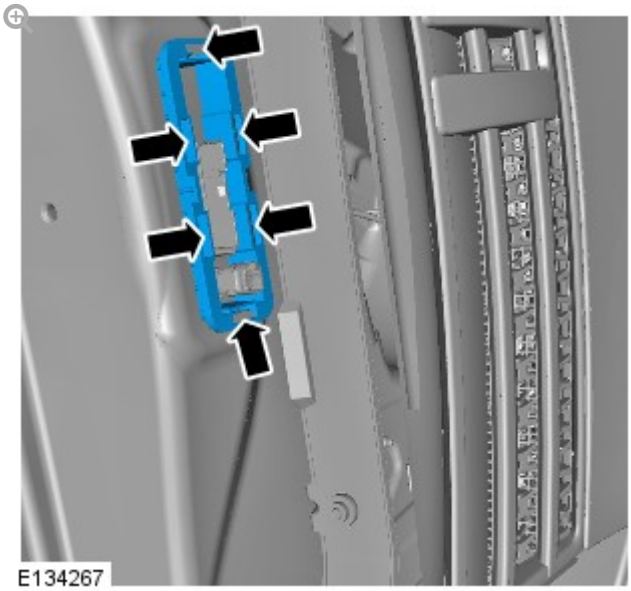

Remove the gaiter mounting bracket.

- Carefully release the 6 clips.

17.

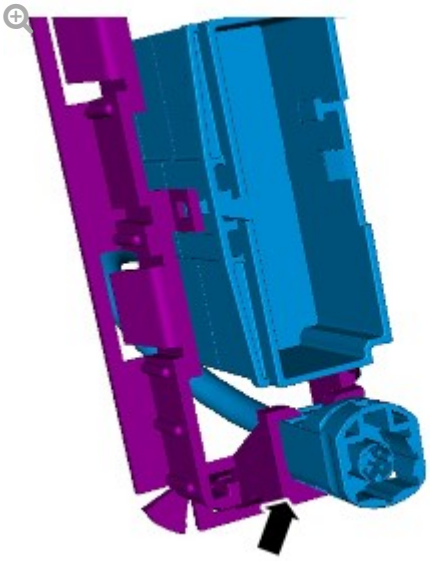

Release the electrical connector from the bracket.

18.

NOTE:

Some variation in the illustrations may occur, but the essential information is always correct.

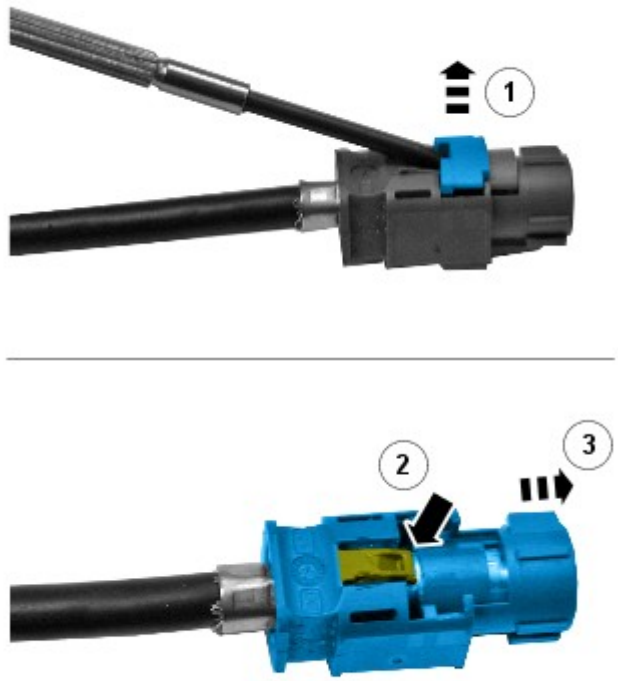

E133998

Remove the connector from the camera overlay wiring harness.

- Remove the locking tab.
- Carefully release the clip.
- Repostition the camera wiring harness through the A-pillar aperture.

INSTALLATION

1.

NOTE:

Some variation in the illustrations may occur, but the essential

information is always correct.

Remove the connectors from the camera overlay wiring harness.

2. **CAUTION:**

Make sure that the camera overlay wiring harness is not bent excessively during this procedure. Failure to follow this instruction may result in damage to the harness.

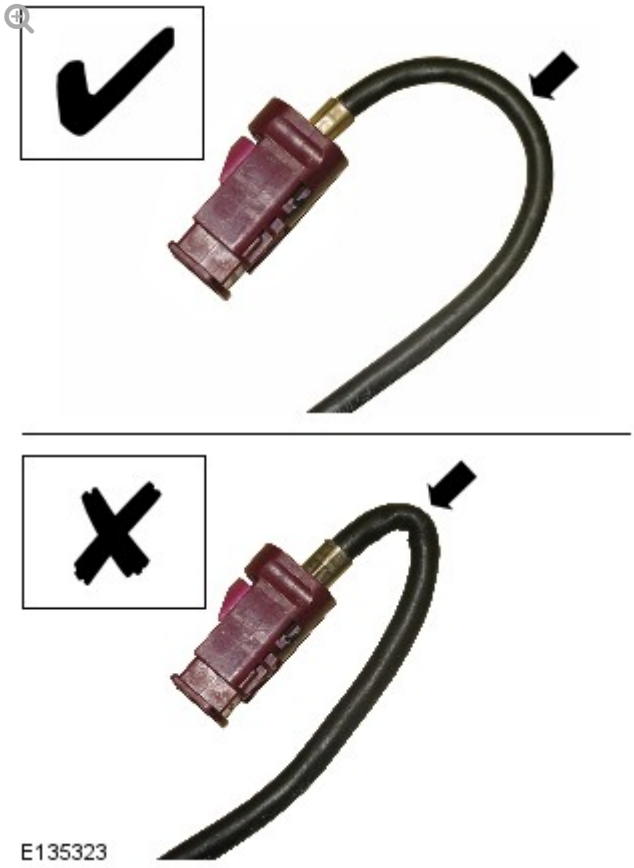

Install the camera overlay wiring harness.

3.

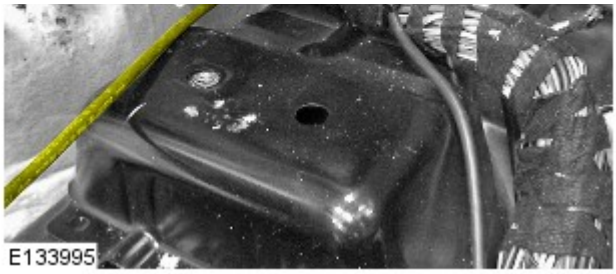

Insert the camera overlay wiring harness under the floor console.

- Route the camera overlay wiring harness along the main body wiring harness up to the parking aid camera module.

4.

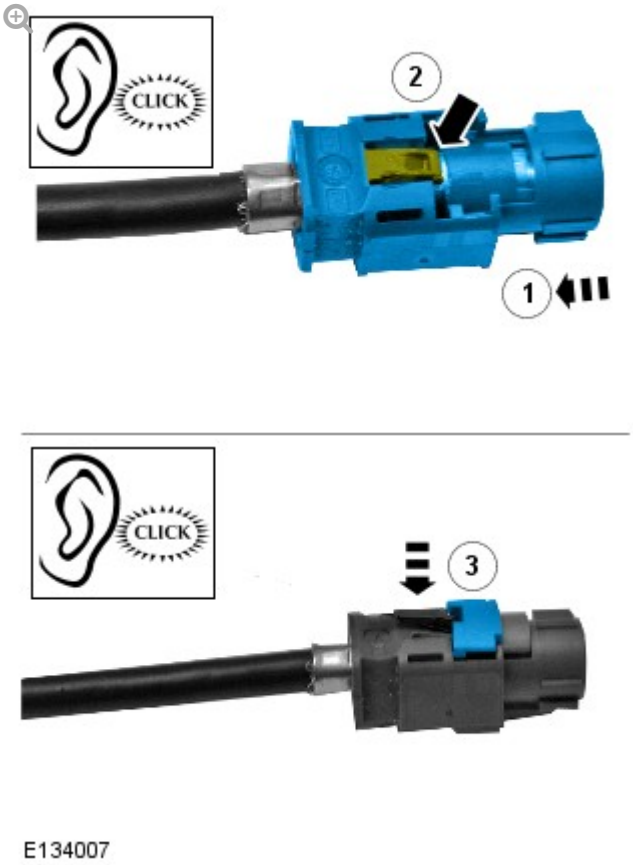

Install the connector to the camera overlay wiring harness.

- Remove the protective tape.
- Install the electrical connector.
- Secure the locking tab.

5.

Connect the camera overlay wiring harness.

6.

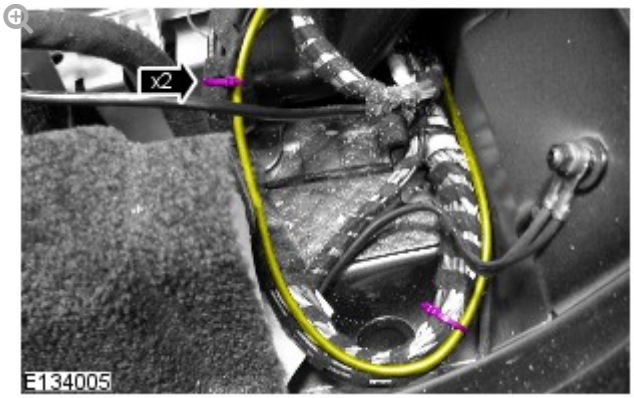

Using suitable tie straps, secure the camera overlay wiring harness to the main body wiring harness.

7. Feed the camera overlay wiring harness through the A-pillar aperture.

8.

NOTE:

Some variation in the illustrations may occur, but the essential information is always correct.

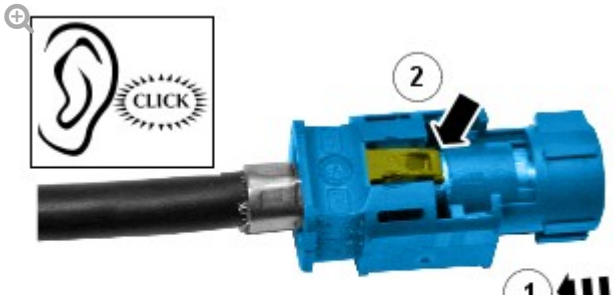

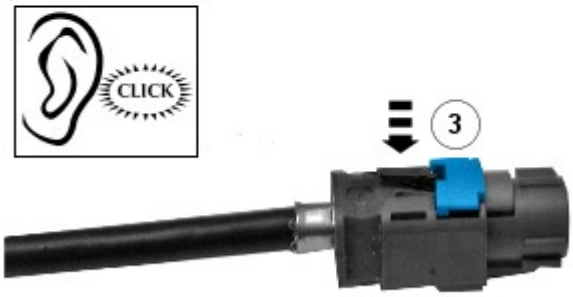

E134007

Install the connector to the camera overlay wiring harness.

- Remove the protective tape.
- Install the electrical connector.
- Secure the locking tab.

9.

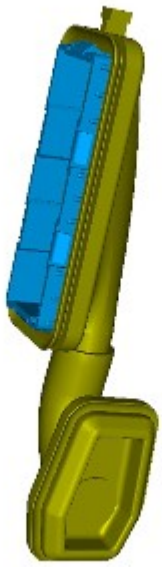

E134266

Secure the gaiter to the gaiter bracket.

10.

CAUTION:

Make sure the electrical connectors are correctly installed and secured.

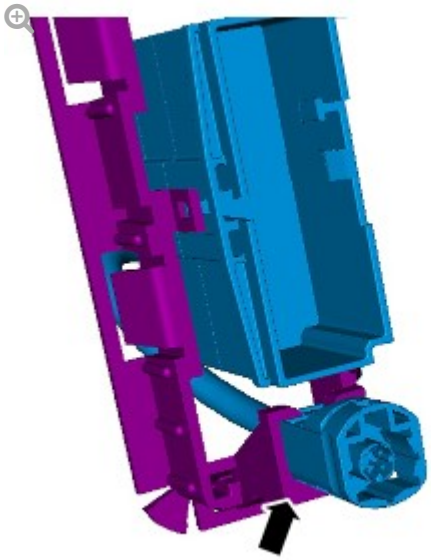

E134268

Secure the camera wiring harness.

11.

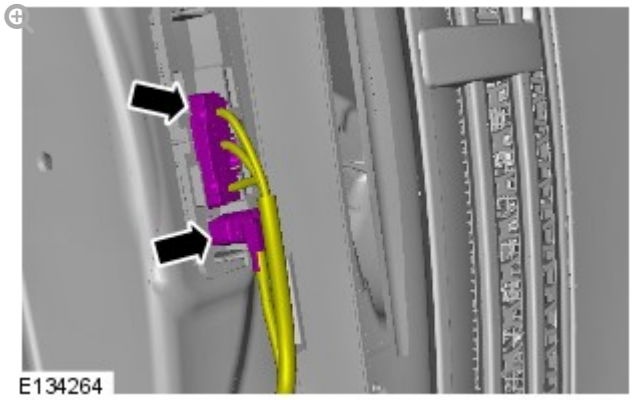

E134264

Connect the 2 electrical connectors.

12.

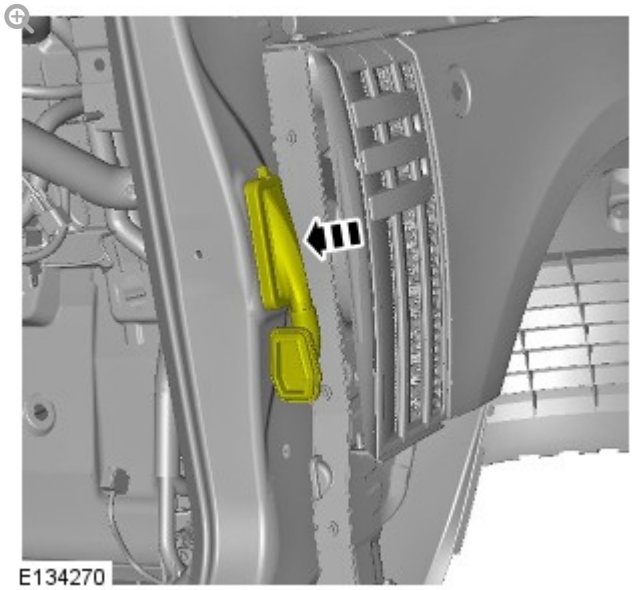

E134270

Secure the gaiter mounting bracket.

- Secure the 6 clips.

13. **NOTE:**

Left-hand shown, right-hand similar.

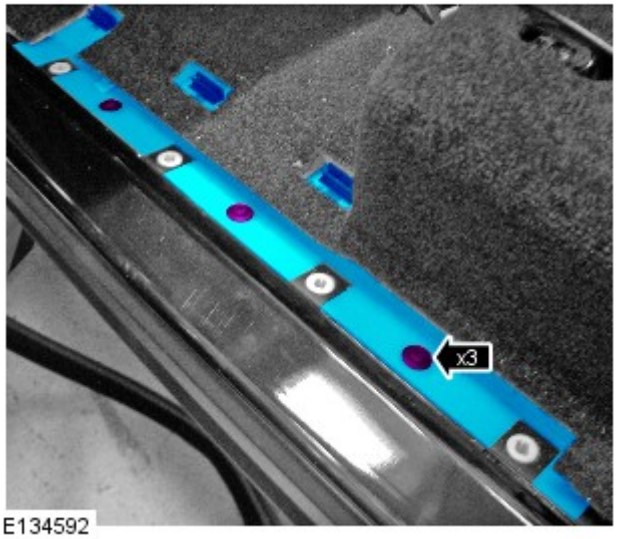

Install the RH wiring harness cover.

- Secure the 3 clips.

14. Install the cowl side trim panel. For additional information, refer to: Cowl Side Trim Panel (501-05 Interior Trim and Ornamentation, Removal and Installation).

15.

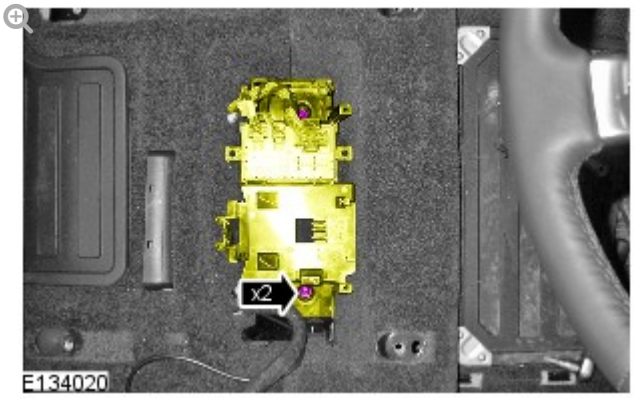

Secure the seat heating module bracket.

- Install the 2 nuts.

16.

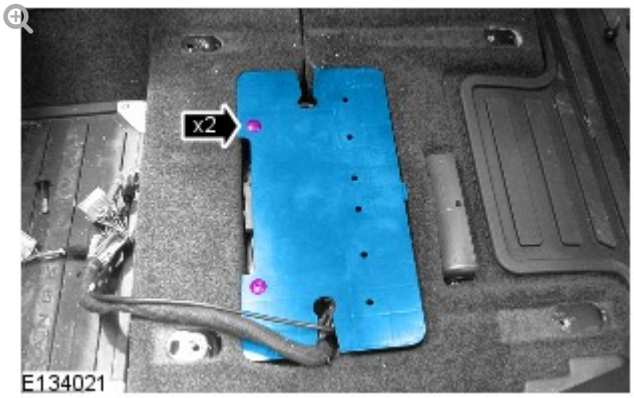

Install the parking aid camera module cover.

- Install the 2 scrivets.

17.

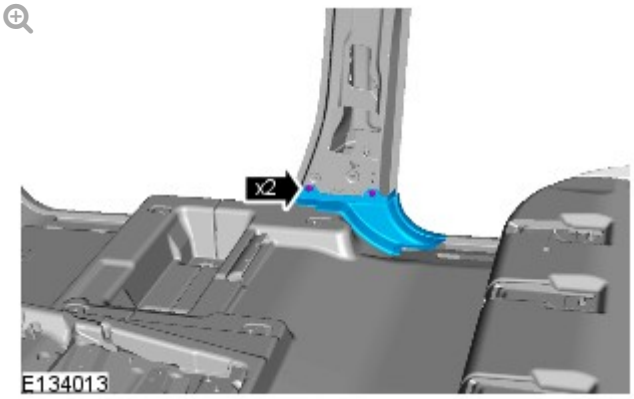

Install the B-pillar floor covering trim panel.

- Secure the 2 clips.
- Repeat to the other side.

18. Install the front scuff plate trim panel.

- Secure the 7 clips.
- Repeat to the other side.

19.

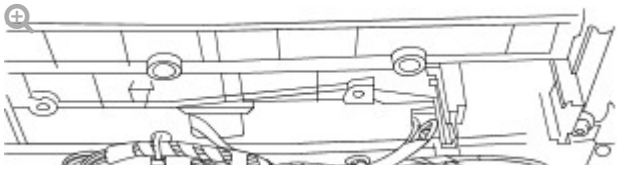

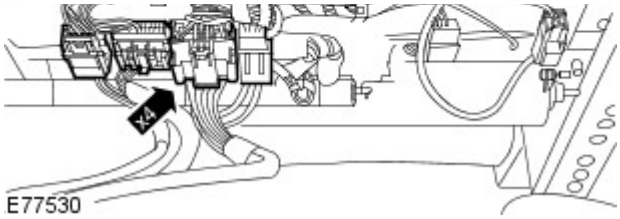

With assistance, install the LH front seat.

- Connect the 4 electrical connectors.

20. Install the RH front seat.
For additional information, refer to: Front Seat (501-10 Seating, Removal and Installation).

21. **NOTE:**

Make sure the 3 seat rail covers are fitted to their original positions. Note: The inner front seat rail does not have a seat rail cover.

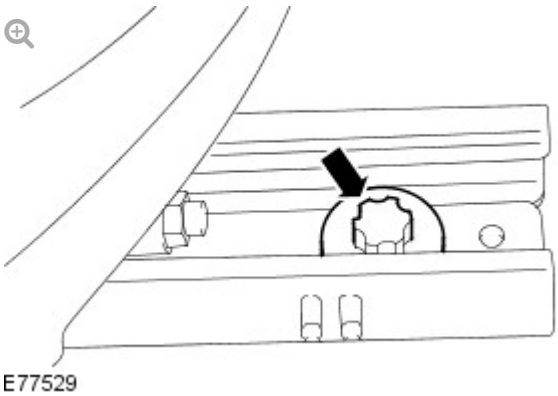

Install the 2 front bolts to the front seat.

- Align the front seat locating pegs.
- Position the front seat fully rearwards.
- Tighten the front seat front bolts to 45 Nm .

22. **NOTE:**

Make sure the 3 seat rail covers are fitted to their original positions. Note: The inner front seat rail does not have a seat

positions. Note: The inner front seat rail does not have a seat rail cover.

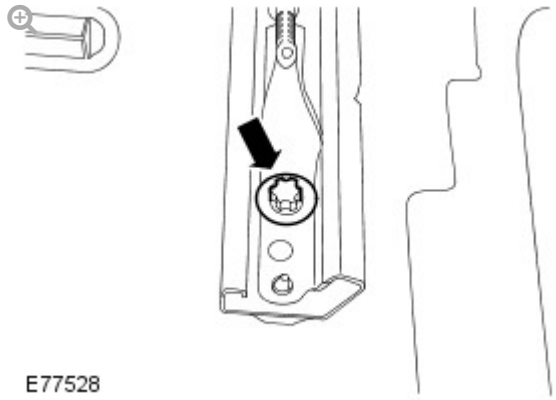

Install the 2 rear bolts to the front seat.

- Position the front seat fully forwards.
- Tighten the front seat rear bolts to 45 Nm.

23. Install the LH B-pillar upper trim panel.
For additional information, refer to: B-Pillar Trim Panel (501-05 Interior Trim and Ornamentation, Removal and Installation).

24. Repeat procedure for the other side.

2012.0 RANGE ROVER (LM), 418-02

WIRING HARNESSES

REAR PARKING AID CAMERA WIRING HARNESS (G1371950)

REMOVAL AND INSTALLATION

REMOVAL

REMOVAL

CAUTION:

Make sure that the camera overlay wiring harness is not bent excessively during this procedure. Failure to follow this instruction may result in damage to the harness.

1. Remove the liftgate upper trim panel.
   For additional information, refer to: Liftgate Upper Trim Panel (501-05 Interior Trim and Ornamentation, Removal and Installation).

2. Remove the LH rear quarter trim panel.
   For additional information, refer to: Rear Quarter Trim Panel (501-05 Interior Trim and Ornamentation, Removal and Installation).

3. Repeat procedure for the other side.

4. **NOTE:**

   LH illustration shown, RH is similar.

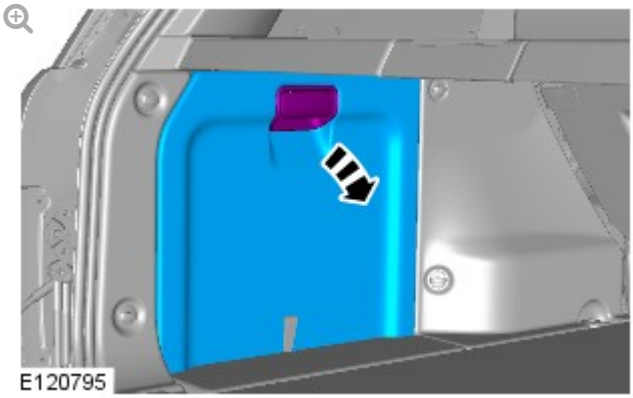

   Remove the RH loadspace trim panel.

5. 

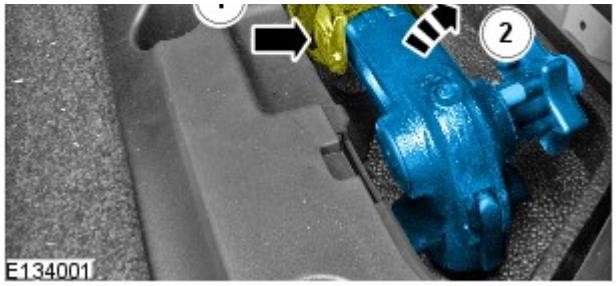

Remove the towing ball.

- Release the strap.

6.

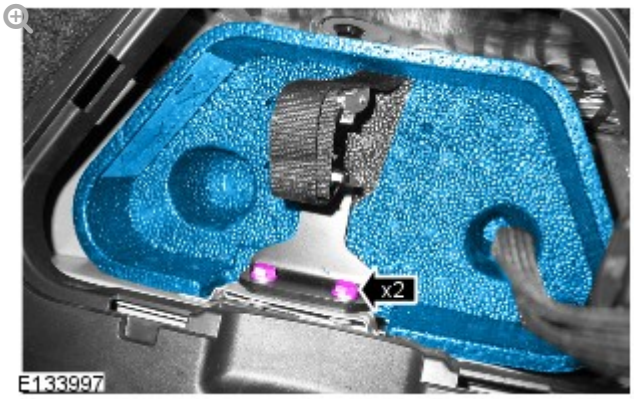

Remove the towing ball holder.

- Remove the 2 bolts.

7.

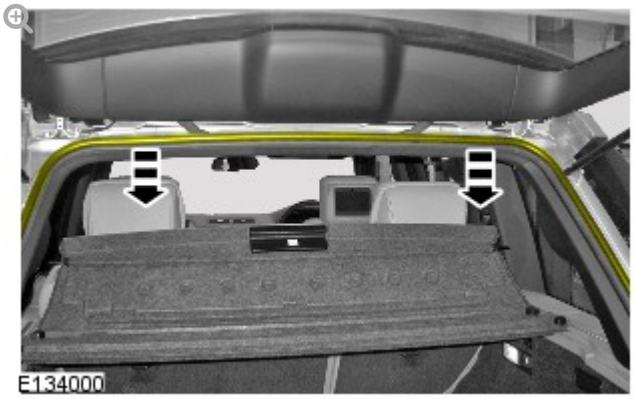

Release the liftgate aperture seal.

8.

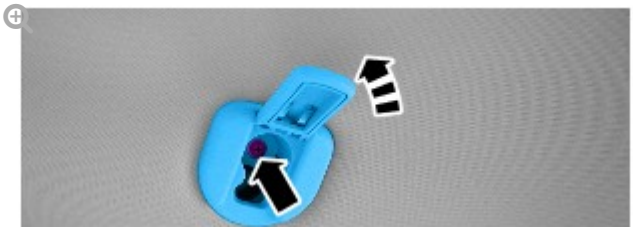

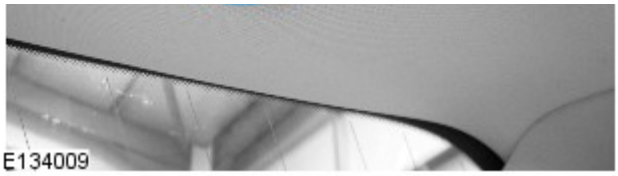

Remove the headliner retainer.

- Remove the Torx bolt.
- Repeat to the other side.

9.

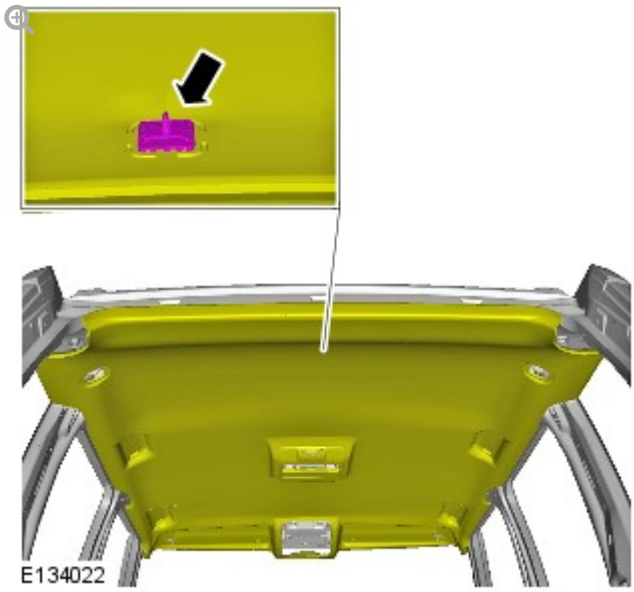

Carefully release the headliner for access.

- Carefully release the clip.

10. Remove the rear seats.
For additional information, refer to: Rear Seat (501-10 Seating, Removal and Installation).

11. Remove the C-pillar lower trim panel
For additional information, refer to: C-Pillar Lower Trim Panel (501-05 Interior Trim and Ornamentation, Removal and Installation).

12. Repeat procedure for the other side.

13. Remove the B-pillar trim panel.
For additional information, refer to: B-Pillar Trim Panel (501-05 Interior Trim and Ornamentation, Removal and Installation).

14. Repeat procedure for the other side.

15.

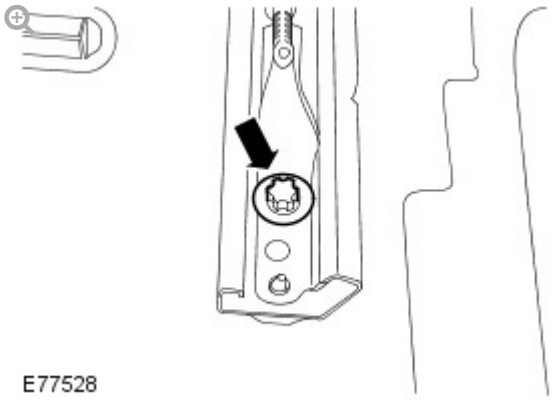

Remove the 2 rear bolts from the LH front seat.

16.

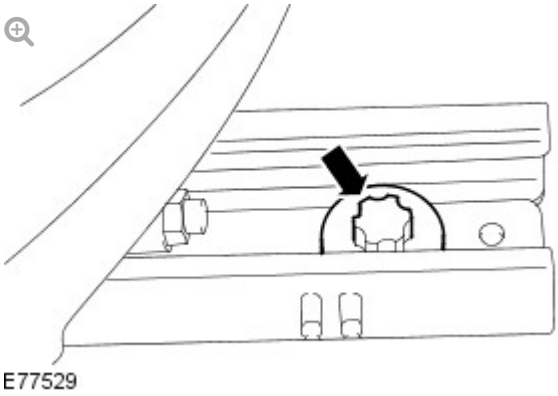

Release the LH front seat.

- Move the LH front seat fully backwards.
- Remove the 2 front seat front bolts.

17. Remove the RH front seat.
For additional information, refer to: Front Seat (501-10 Seating, Removal and Installation).

18.

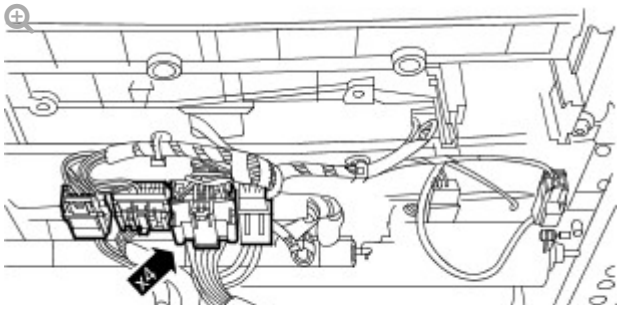

With assistance remove the LH front seat.

- Disconnect the 4 electrical connectors.

19.

NOTE:

Left-hand shown, right-hand similar.

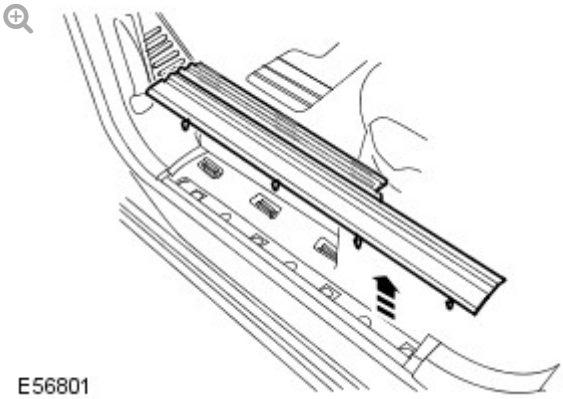

Remove the front scuff plate trim panel.

- Release the 7 clips.
- Repeat to the other 3 scuff plate trim panels.

20.

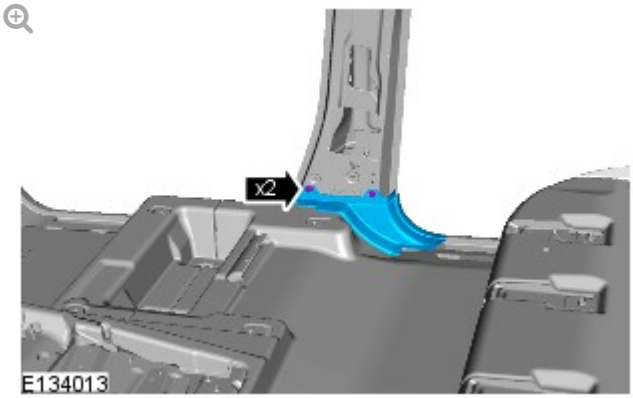

Remove the B-pillar floor covering trim panel.

- Remove the 2 clips.
- Repeat to the other side.

21.

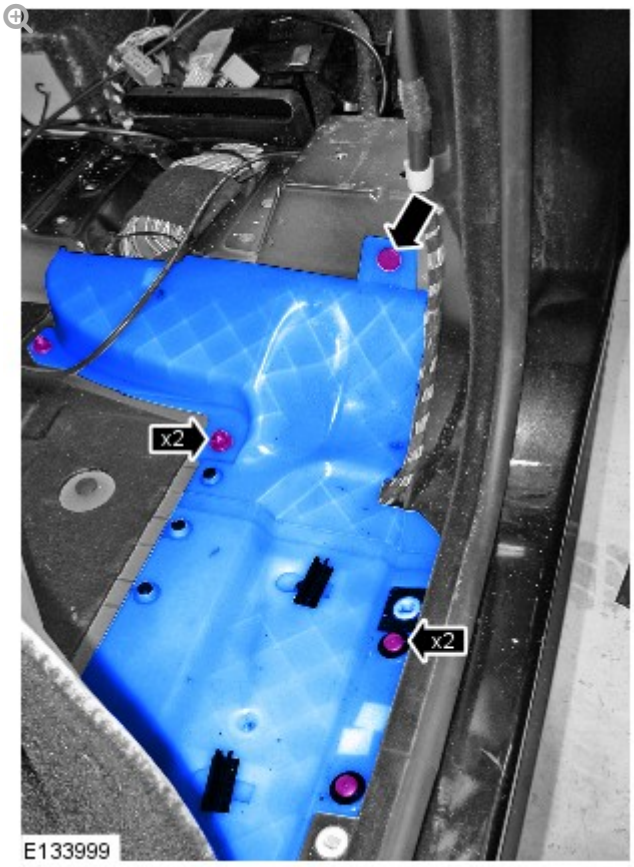

Remove the 2 center wiring harness covers.

- Remove the 4 clips.
- Remove the nut.

22.

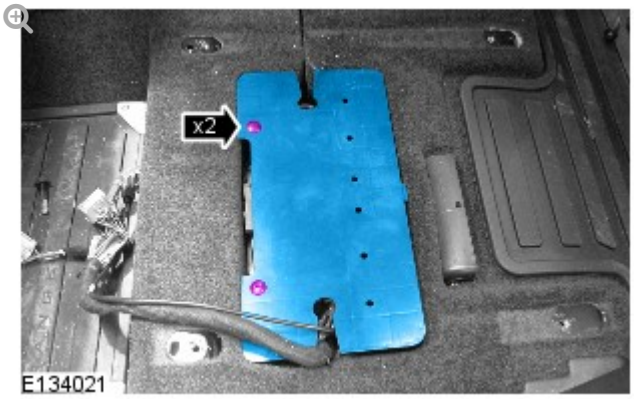

Remove the parking aid camera module cover.

- Remove the 2 scrivets.
- Repeat to the other side.

23.

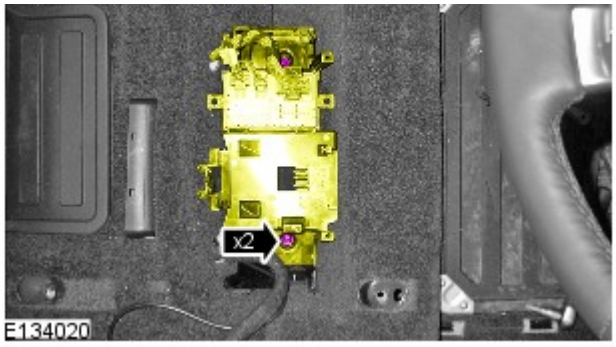

Release the seat heating module bracket.

- Remove the 2 nuts.

24.

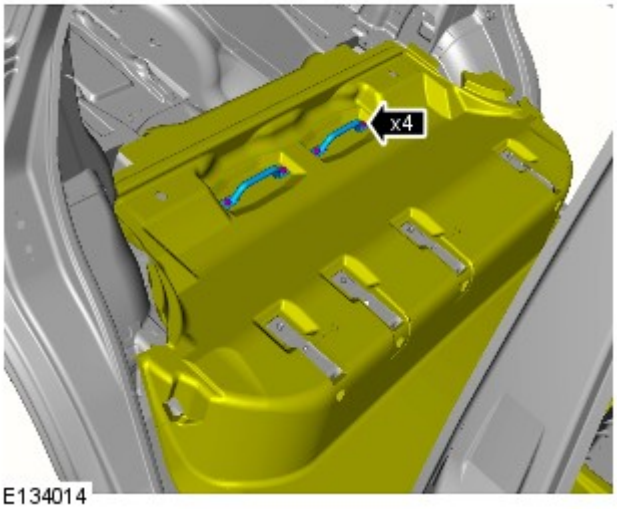

Remove the rear seat brackets.

- Remove the 4 Torx bolts.

25.

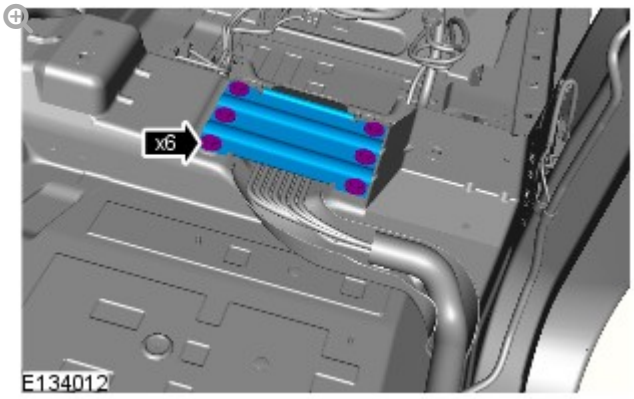

Remove the wiring harness cover.

- Remove the 6 bolts.

26.

NOTE:

Some variation in the illustrations may occur, but the essential information is always correct.

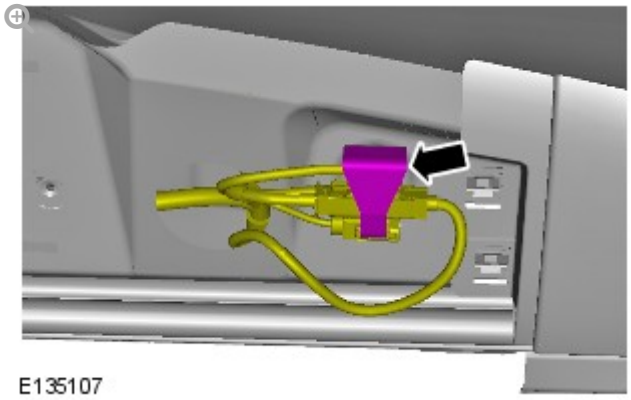

E135107

If installed, release the wiring harness clip.

27.

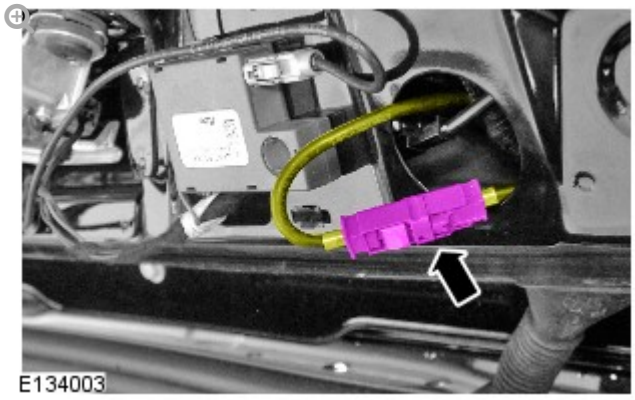

E134003

Disconnect the camera wiring harness.

28.

Disconnect the camera wiring harness.

INSTALLATION

1.

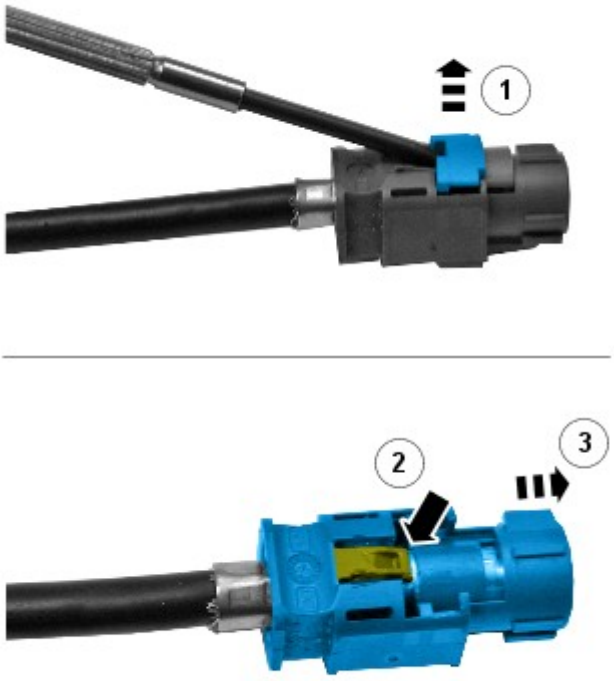

E133998

Remove the connectors from the camera overlay wiring harness.

- Remove the locking tab.
- Carefully release the clip.
- Apply suitable tape to protect the end of the camera overlay wiring harness.
- Repeat to the other connector.

2.

CAUTION:

Make sure that the camera overlay wiring harness is not bent excessively during this procedure. Failure to follow this instruction may result in damage to the harness.

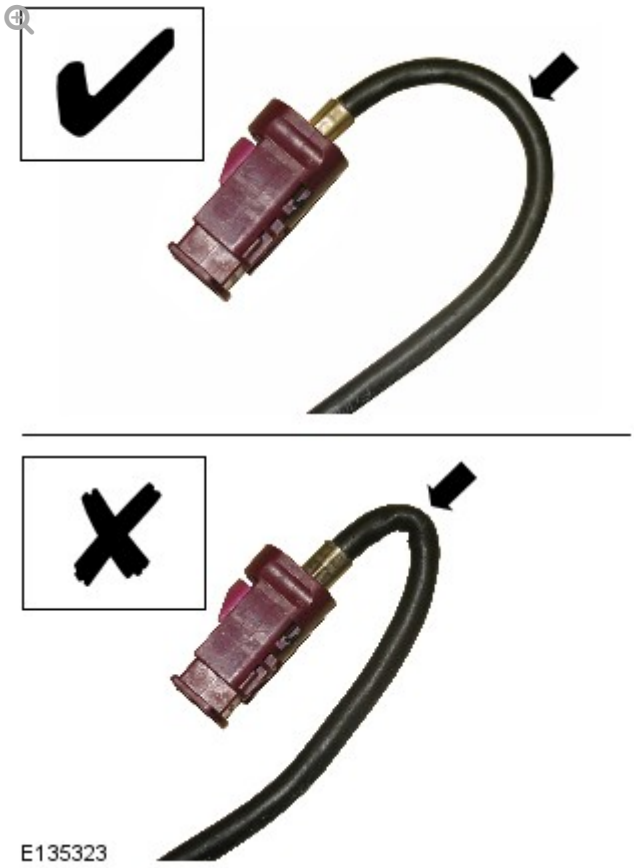

Install the camera overlay wiring harness.

3.

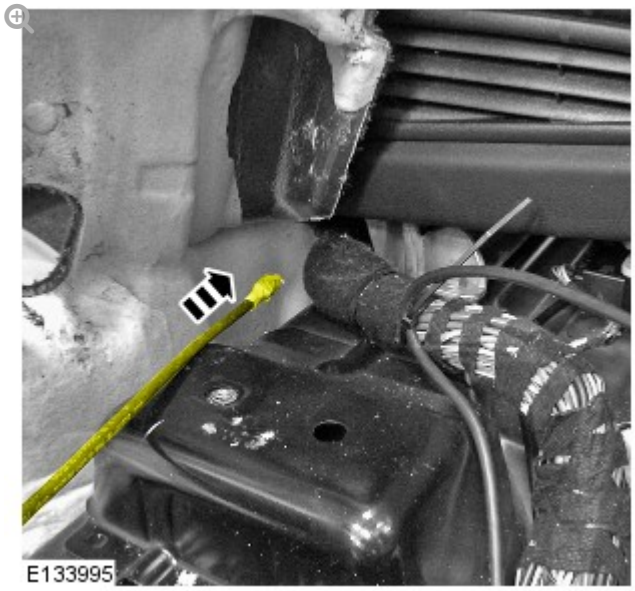

Insert the camera overlay wiring harness under the floor console.

- Route the camera overlay wiring harness along the main body wiring harness up to the parking camera module.

4.

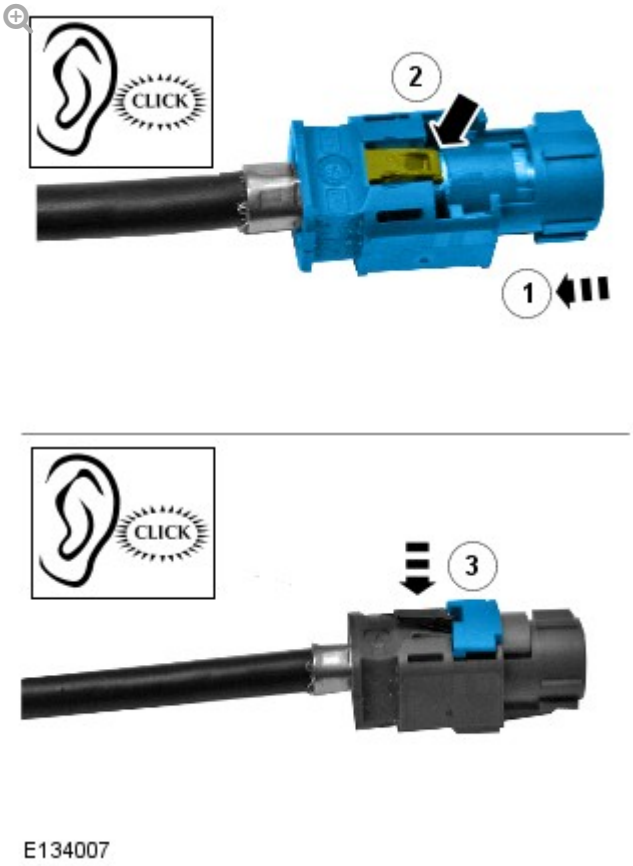

Install the connector to the camera overlay wiring harness.

- Remove the protective tape.
- Install the electrical connector.
- Secure the locking tab.

5.

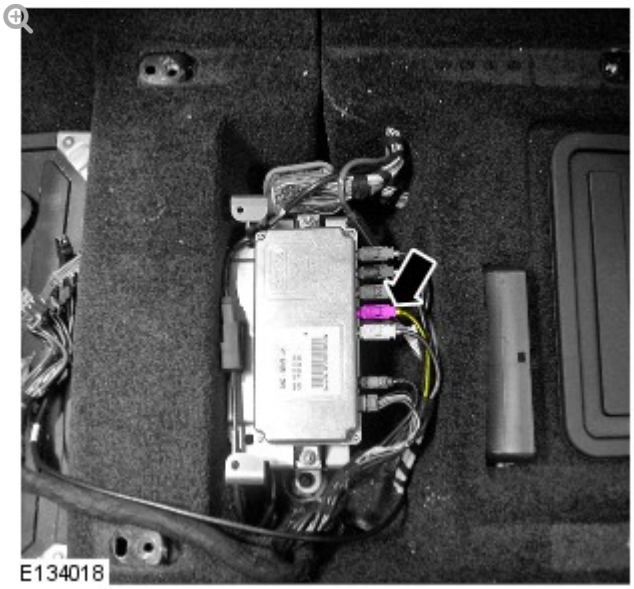

Connect the camera overlay wiring harness.

6. **CAUTION:**

> Make sure that excessive force is not used when installing the tie straps to the wiring harness. Failure to follow this instruction may result in damage to the harness.

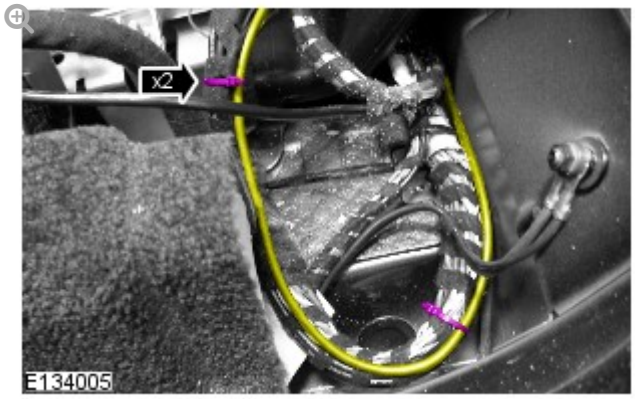

Using suitable tie straps, secure the camera overlay wiring harness to the main body wiring harness.

7. Feed the camera overlay wiring harness to the rear of the vehicle along the main body wiring harness.

8. 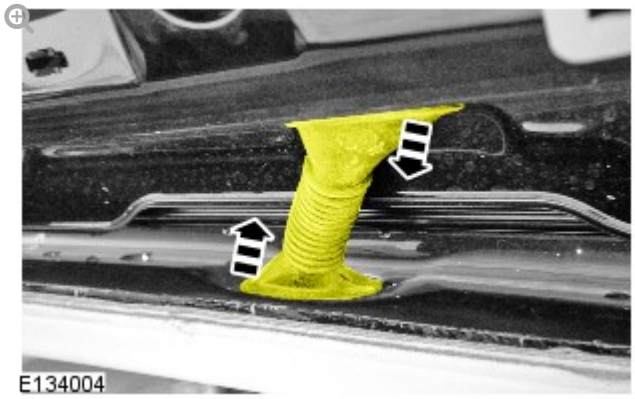

Release the liftgate conduit.

- Release the 2 grommets.

9.

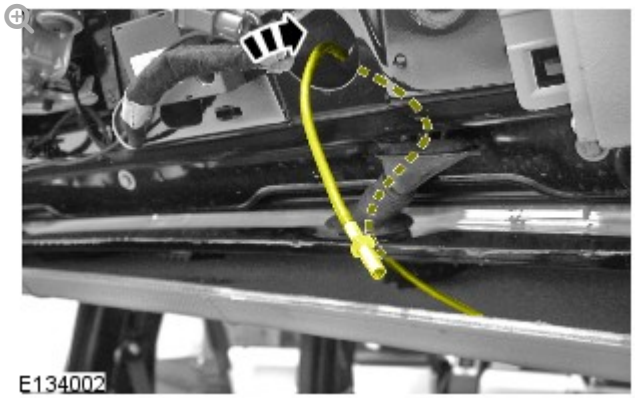

Feed the camera overlay wiring harness through the liftgate conduit.

10.

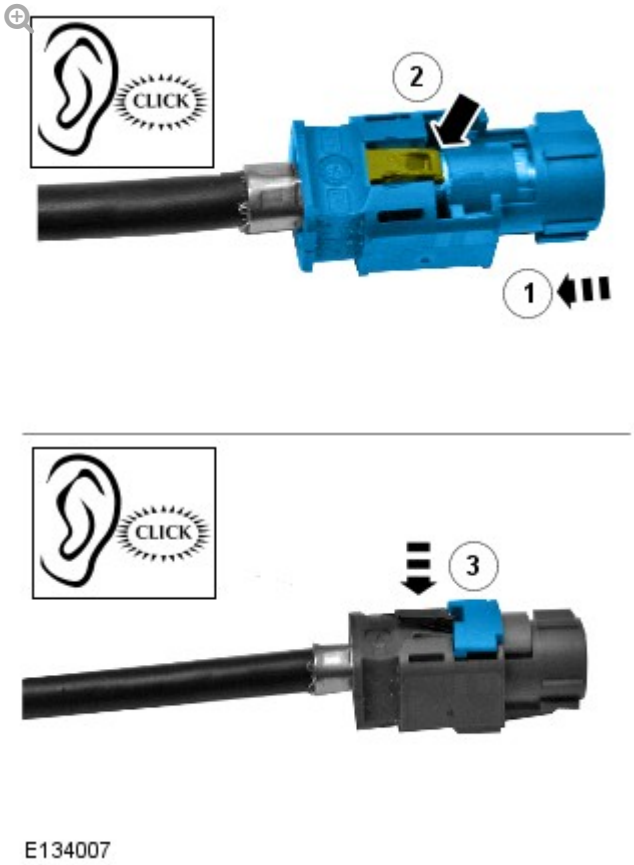

Install the connector to the camera overlay wiring harness.

- Remove the protective tape.
- Install the electrical connector.
- Secure the locking tab.
- Make sure the camera overlay wiring harness protrudes the same distance as the existing camera wiring harness.

11.

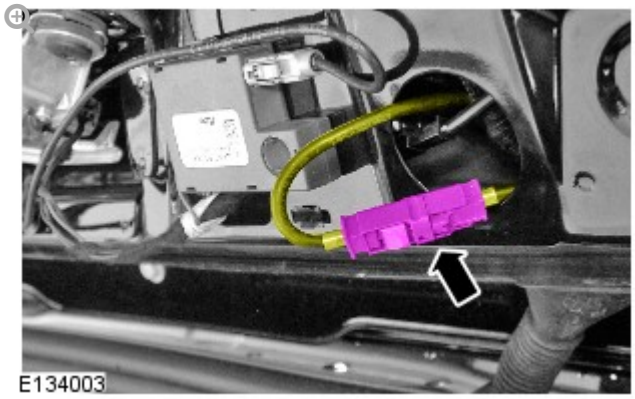

Connect the camera overlay wiring harness.

12.

CAUTION:

Make sure that a wiring harness clip is installed to the vehicle. Failure to follow this instruction may result in damage to the vehicle.

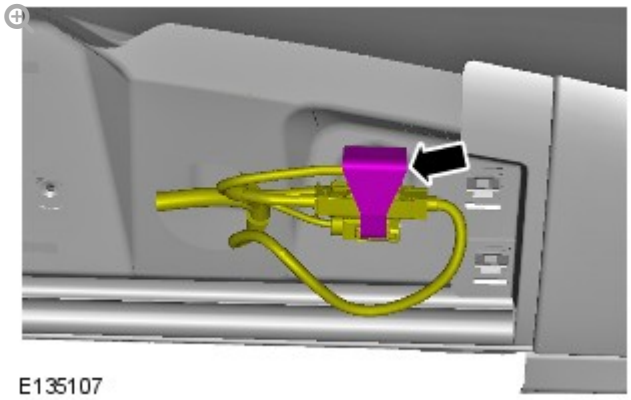

Secure the camera overlay wiring harness.

13.

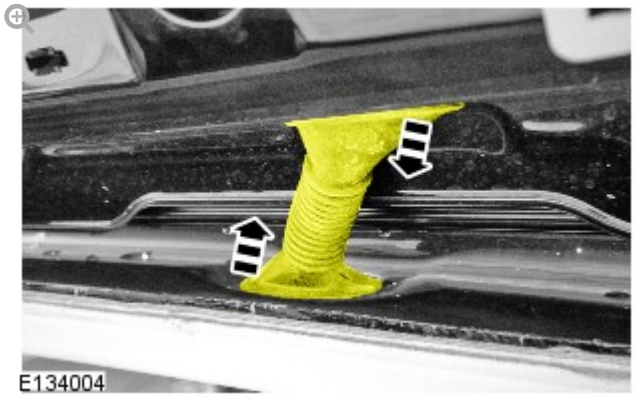

Secure the liftgate conduit.

- Secure the 2 grommets.

14.

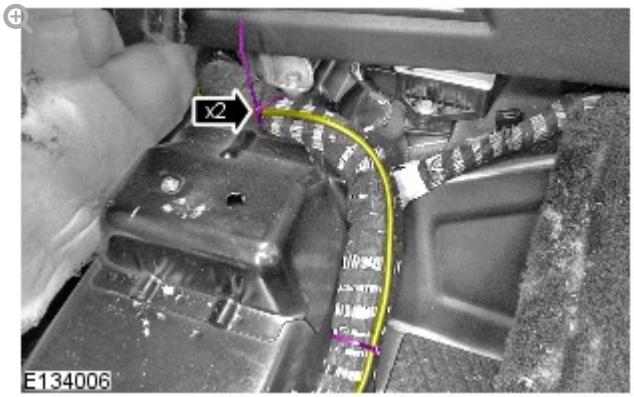

Using suitable tie straps, secure the camera overlay wiring harness to the main body wiring harness.

15.

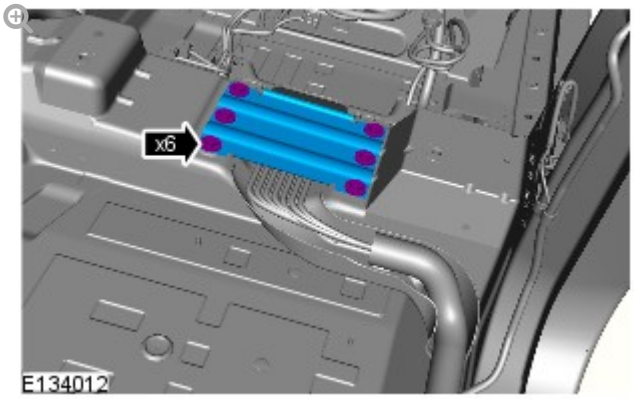

Install the wiring harness cover.

- Tighten the 6 bolts to 25 Nm.

16. Install the floor covering.

17.

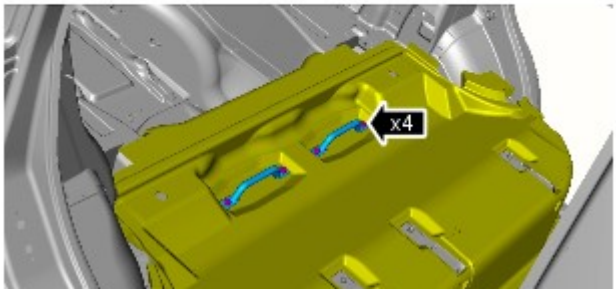

Install the rear seat backrest retaining brackets.

- Tighten the 4 Torx bolts to 45 Nm.

18.

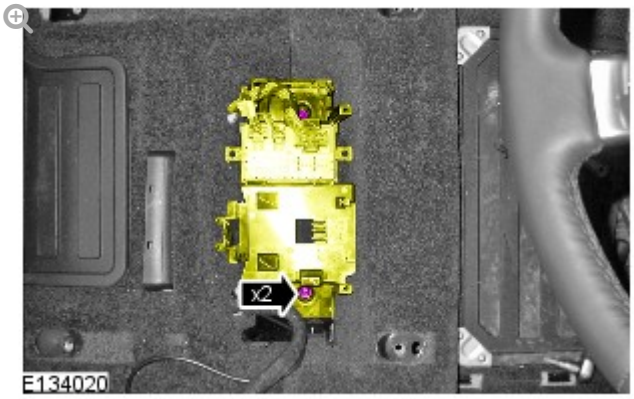

Secure the seat heating module bracket.

- Install the 2 nuts.

19.

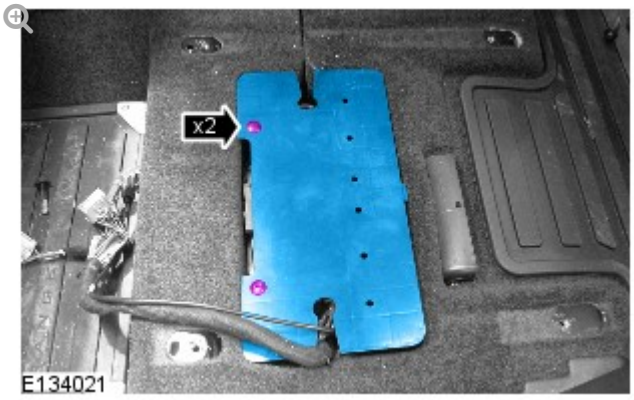

Install the parking aid camera module cover.

- Install the 2 scrivets.

20.

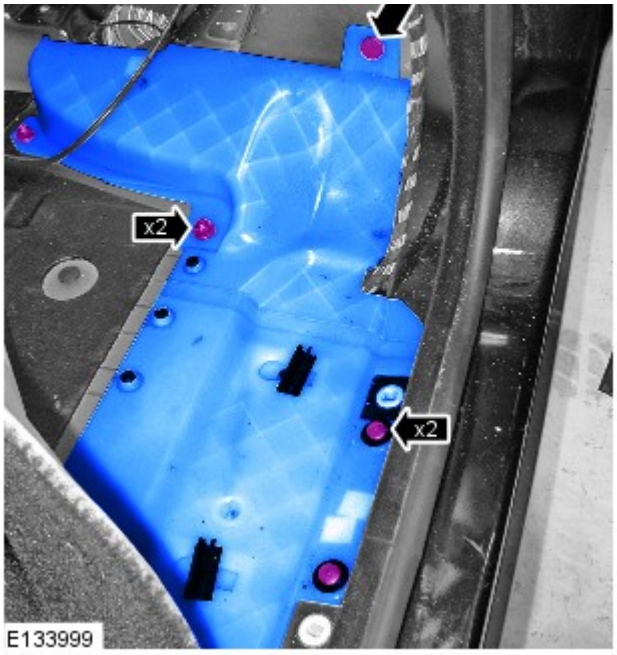

Install the 2 center wiring harness covers.

- Install the nut.
- Secure the 4 clips.

21.

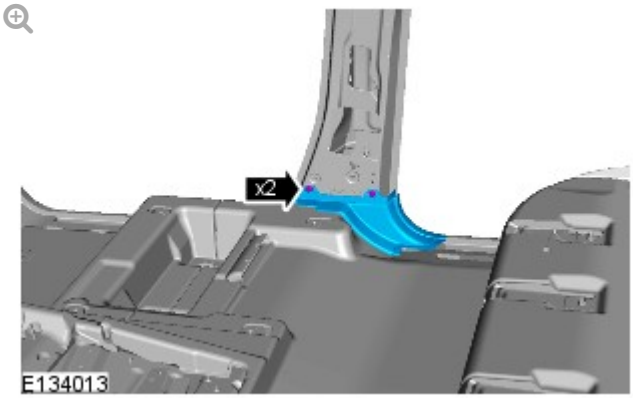

Install the B-pillar floor covering trim panel.

- Secure the 2 clips.
- Repeat to the other side.

22.

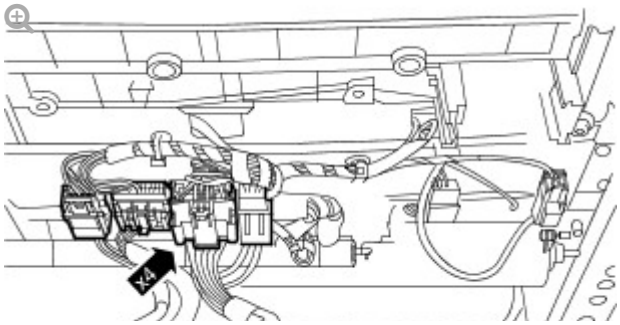

With assistance, install the LH front seat.

- Connect the 4 electrical connectors.

23. Install the RH front seat.
For additional information, refer to: Front Seat (501-10 Seating, Removal and Installation).

24. **NOTE:**

Make sure the 3 seat rail covers are fitted to their original positions. Note: The inner front seat rail does not have a seat rail cover.

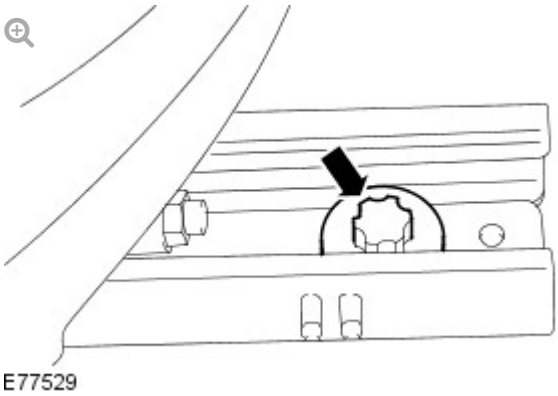

Install the 2 front bolts to the front seat.

- Align the front seat locating pegs.
- Position the front seat fully rearwards.
- Tighten the front seat front bolts to 45 Nm.

25. **NOTE:**

Make sure the 3 seat rail covers are fitted to their original positions. Note: The inner front seat rail does not have a seat rail cover.

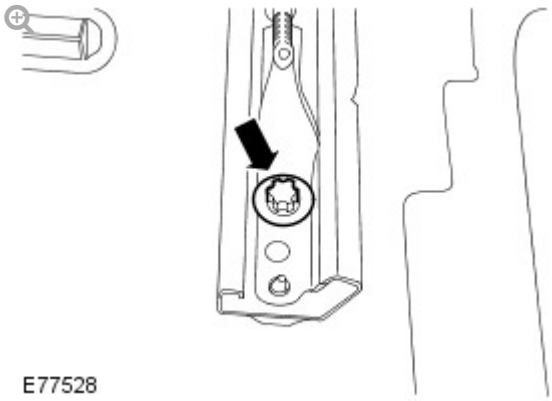

Install the 2 rear bolts to the front seat.

- Position the front seat fully forwards.
- Tighten the front seat rear bolts to 45 Nm.

26. Install the LH B-pillar upper trim panel.
For additional information, refer to: B-Pillar Trim Panel (501-05 Interior Trim and Ornamentation, Removal and Installation).

27. **CAUTION:**

Make sure the safety belt is secure and correctly installed.

Install the RH B-pillar trim panel.

28.

NOTE:

Make sure the safety belt is operating correctly.

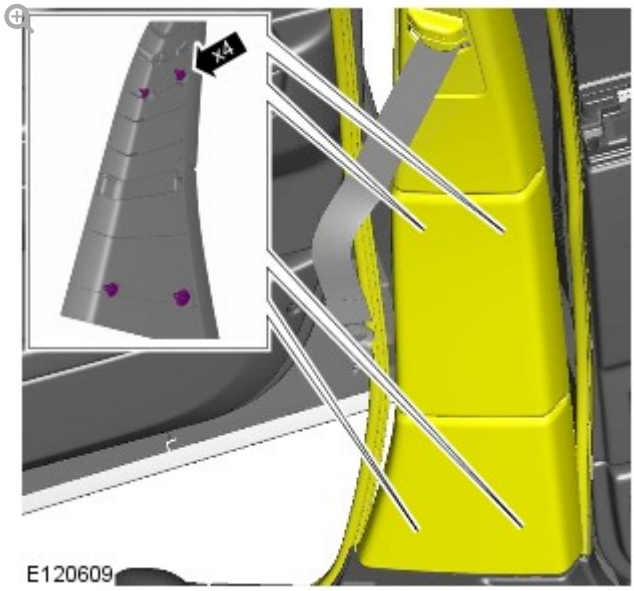

Secure the RH B-pillar trim panel.

- Secure the 4 clips.
- Secure the front and rear door aperture weatherstrips.

29.

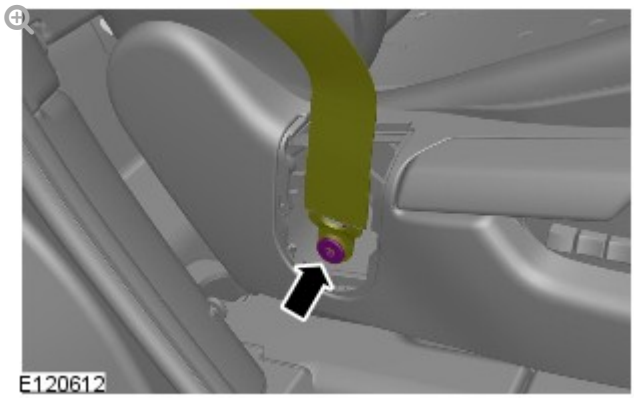

Attach the RH safety belt lower anchor to the seat.

- Install a new bolt and tighten to 45 Nm.

- Install a new bolt and tighten to 45 Nm.

30.

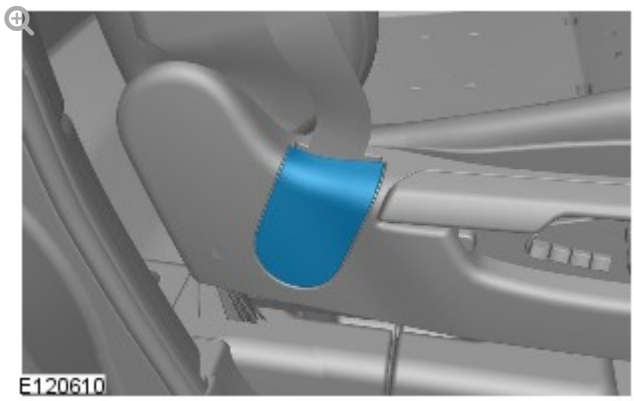

Install the safety belt lower anchor bolt cover.

31. Install the C-pillar lower trim panel.
For additional information, refer to: C-Pillar Lower Trim Panel (501-05 Interior Trim and Ornamentation, Removal and Installation).

32. Repeat procedure for the other side.

33. Install the rear seats. For additional information, refer to: Rear Seat (501-10 Seating, Removal and Installation).

34.

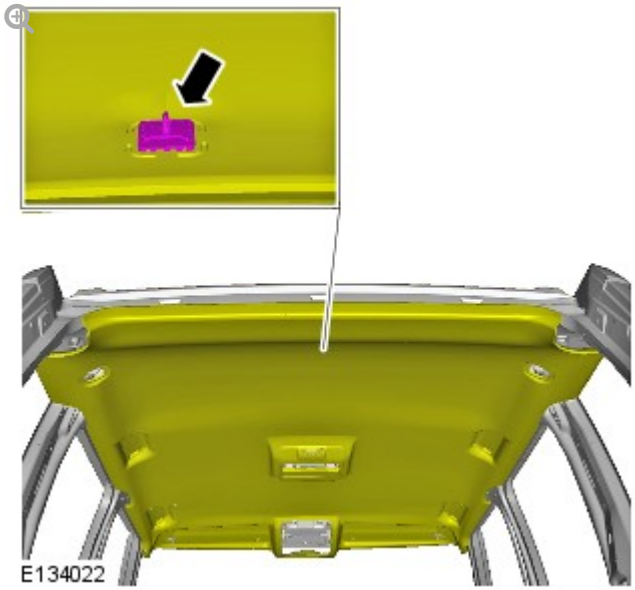

Secure the headliner.

- Secure the clip.

35.

Install the headliner retainer.

- Tighten the bolt to 7 Nm.
- Repeat to the other side.

36.

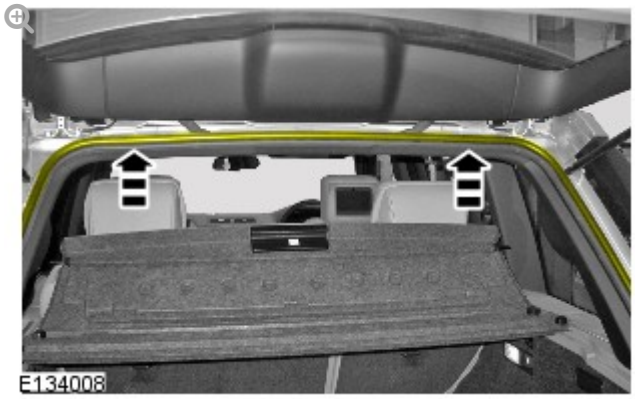

Install the liftgate aperture seal.

37.

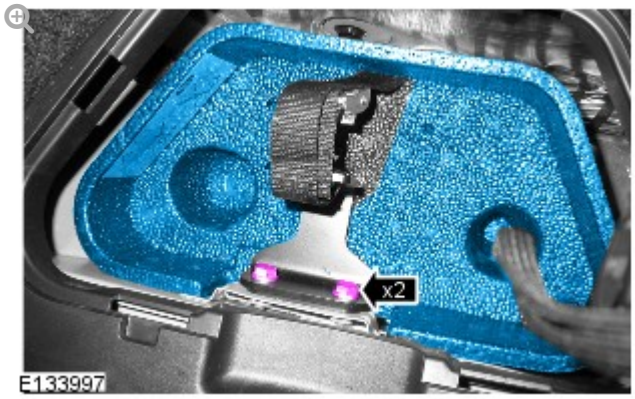

Install the towing ball holder.

- Tighten the 2 bolts to 25 Nm.

38.

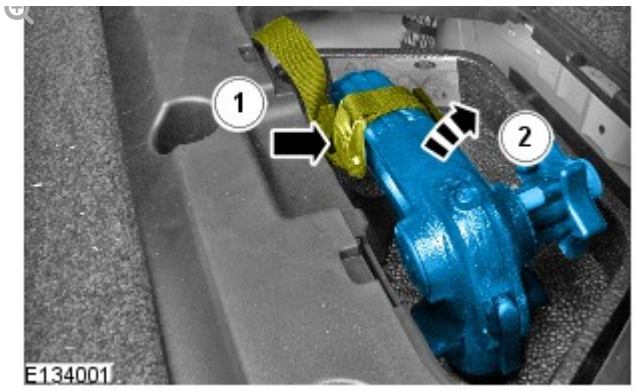

Install the towing ball.

- Secure the retaining strap.

39.

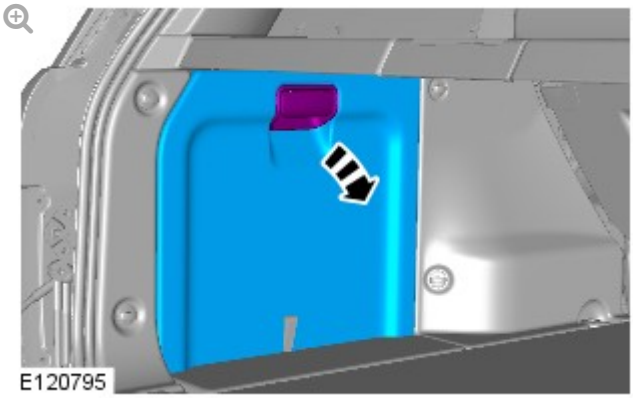

Install the RH loadspace trim panel.

40. Install the LH rear quarter trim panel.
For additional information, refer to: Rear Quarter Trim Panel (501-05 Interior Trim and Ornamentation, Removal and Installation).

41. Repeat procedure for the other side.

42. Install the liftgate upper trim panel.
For additional information, refer to: Liftgate Upper Trim Panel (501-05 Interior Trim and Ornamentation, Removal and Installation).

WIRING HARNESSES

LEFT HAND PARKING AID CAMERA WIRING HARNESS

(G1371951)

REMOVAL AND INSTALLATION

REMOVAL

CAUTION:

Make sure that the camera overlay wiring harness is not bent excessively during this procedure. Failure to follow this instruction may result in damage to the harness.

1. Remove the LH B-pillar trim panel.
   For additional information, refer to: B-Pillar Trim Panel (501-05

For additional information, refer to: B-Pillar Trim Panel (501-05 Interior Trim and Ornamentation, Removal and Installation).

2. Remove the LH front seat.
   For additional information, refer to: Front Seat (501-10 Seating, Removal and Installation).

3. 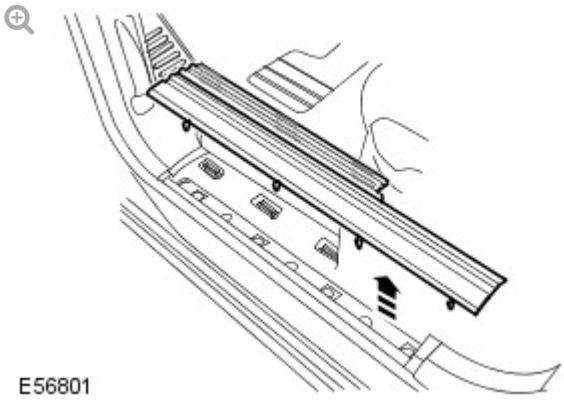

   Remove the front scuff plate trim panel.

   - Release the 7 clips.

4. 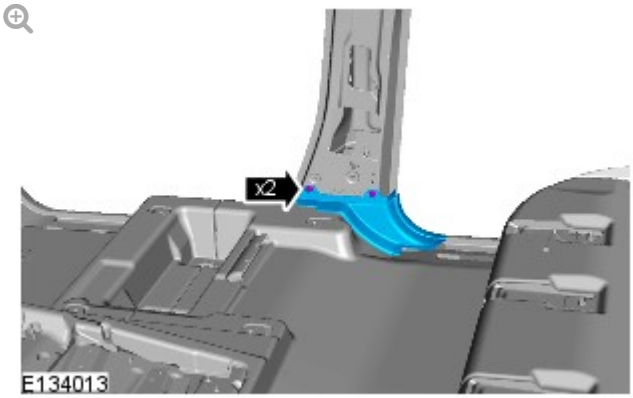

   Remove the B-pillar floor covering trim panel.

   - Remove the 2 clips.

5. 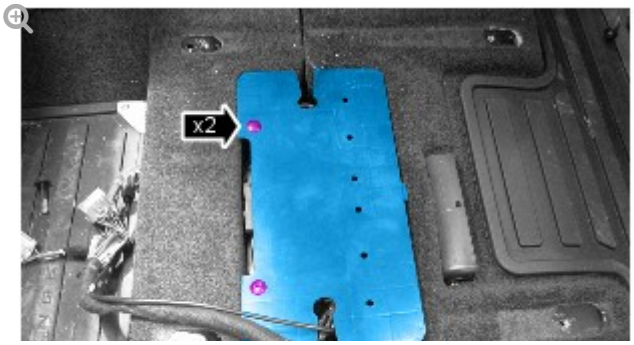

Remove the parking aid camera module cover.

- Remove the 2 scrivets.

6.

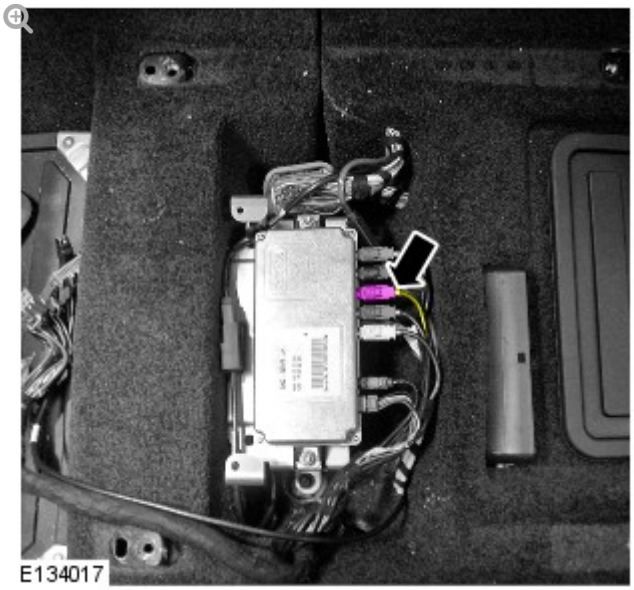

Disconnect the camera wiring harness.

7.

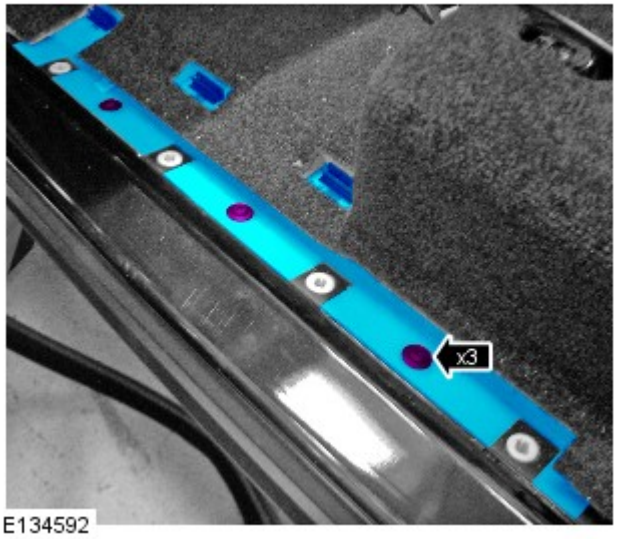

Remove the LH wiring harness cover.

- Remove the 3 clips.

8. Remove the LH cowl side trim panel. For additional information, refer to: Cowl Side Trim Panel (501-05 Interior Trim and

Ornamentation, Removal and Installation).

9. **NOTES:**

- Door shown removed for clarity.
- Right-hand shown, left-hand similar.

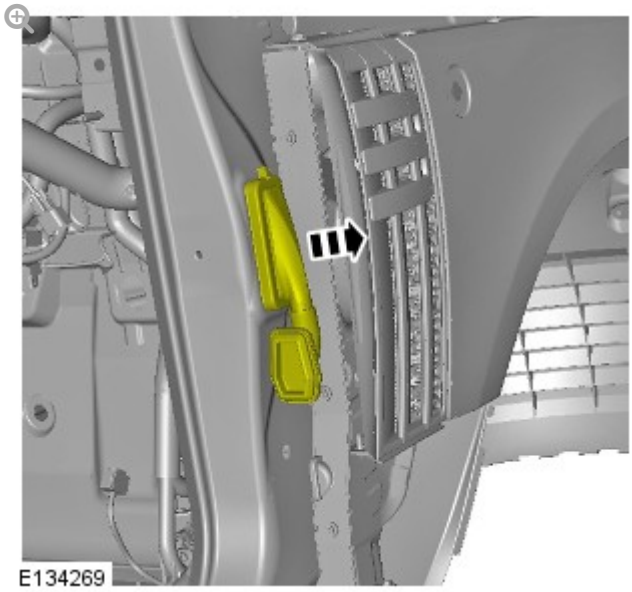

Release the gaiter.

10. **NOTE:**

Right-hand shown, left-hand similar.

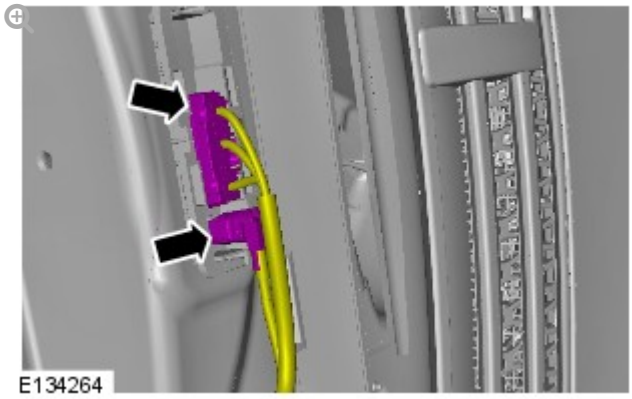

Disconnect the 2 electrical connectors.

Disconnect the 2 electrical connectors.

11.

NOTE:

Right-hand shown, left-hand similar.

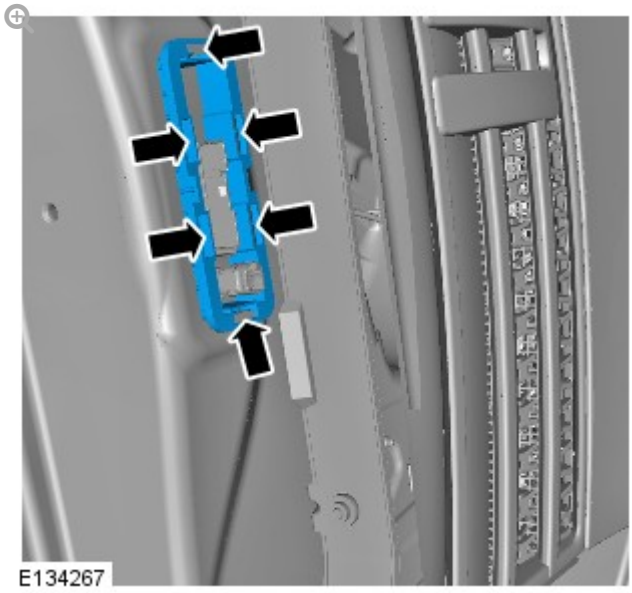

Remove the gaiter mounting bracket.

- Carefully release the 6 clips.

12.

NOTE:

Right-hand shown, left-hand similar.

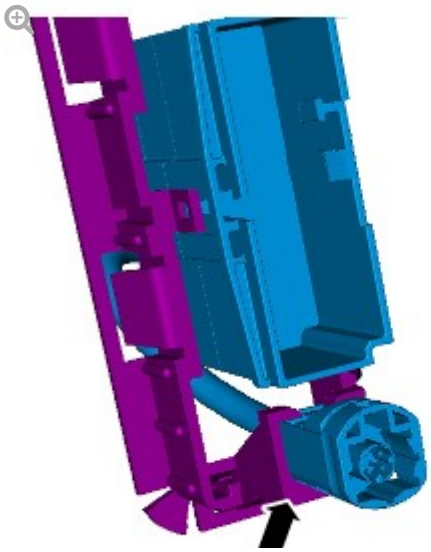

E134268

Release the electrical connector from the bracket.

13.

NOTE:

Some variation in the illustrations may occur, but the essential information is always correct.

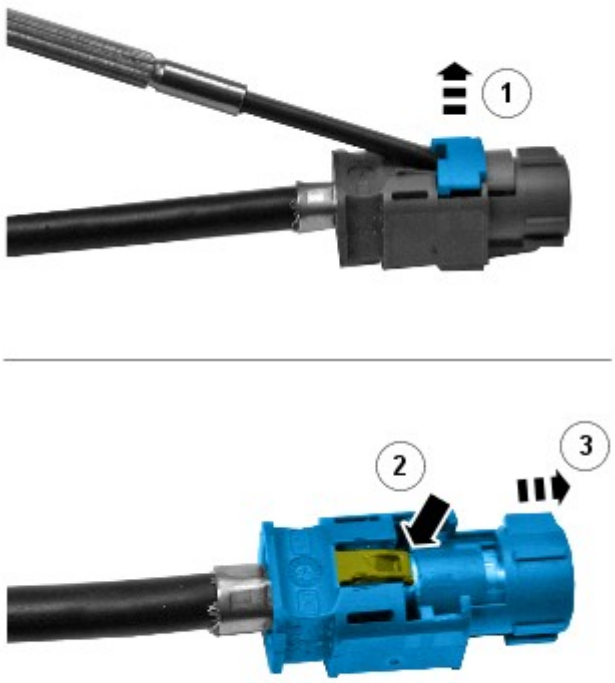

E133998

Remove the connector from the camera wiring harness.

- Remove the locking tab.
- Carefully release the clip.
- Repostition the camera wiring harness through the A-pillar aperture.

INSTALLATION

1.

CAUTION:

Make sure that the camera overlay wiring harness is not bent excessively during this procedure. Failure to follow this instruction may result in damage to the harness.

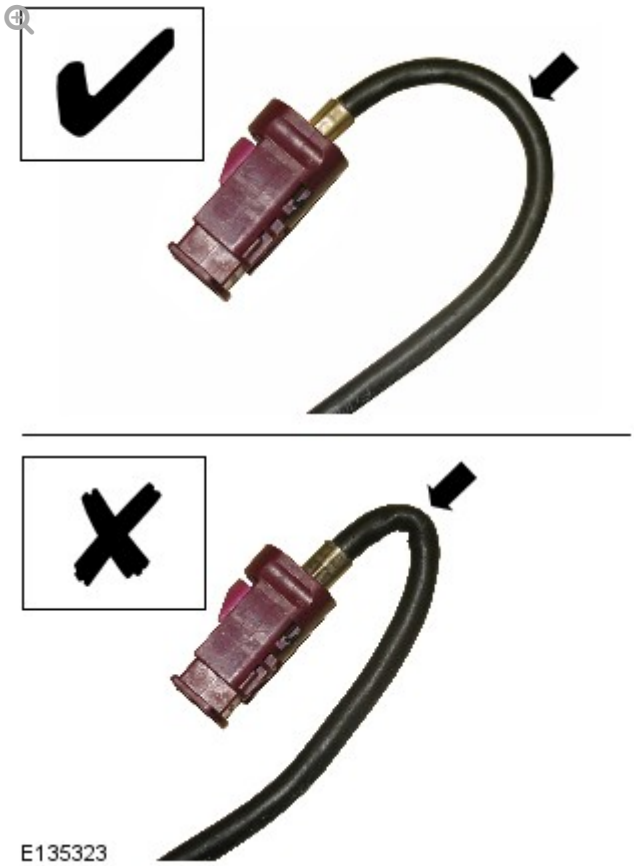

Install the camera overlay wiring harness.

2.

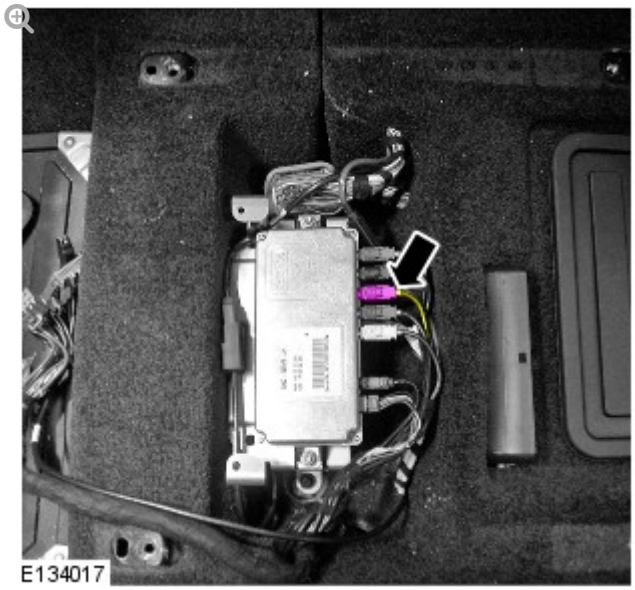

Connect the camera overlay wiring harness.

3.

CAUTION:

Make sure that any tie straps used are not tightened excessively on the camera wiring harness and link leads, Failure to follow this instruction may result in damage to the harness.

Carefully wrap any excess camera overlay wiring harness around the module.

- Using suitable tie straps, secure the camera overlay wiring harness to the main body wiring harness.

4.

NOTE:

Some variation in the illustrations may occur, but the essential information is always correct.

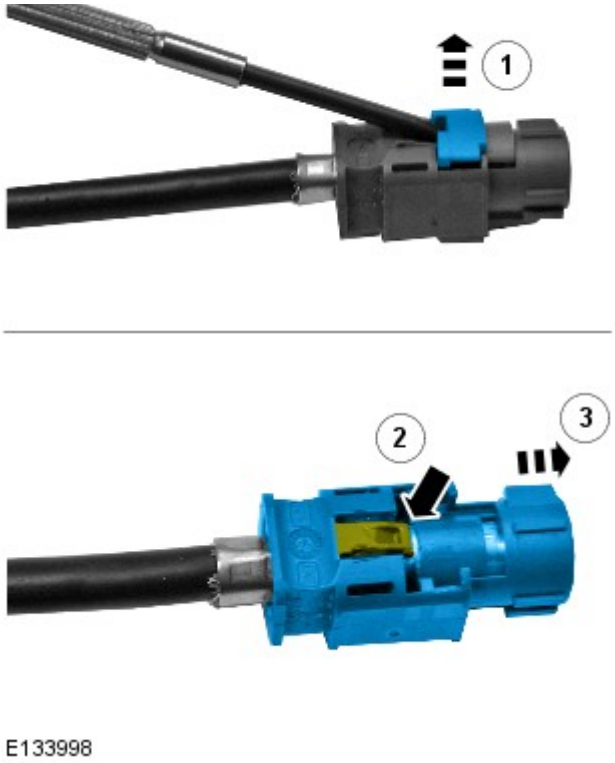

Remove the connector from the camera overlay wiring harness.

- Remove the locking tab.
- Carefully release the clip.
- Apply suitable tape to protect the end of the camera overlay wiring harness.

5. Feed the camera overlay wiring harness through the A-pillar aperture.

6. **NOTE:**

Some variation in the illustrations may occur, but the essential information is always correct.

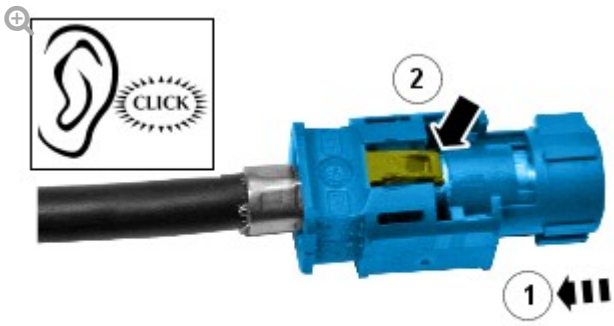

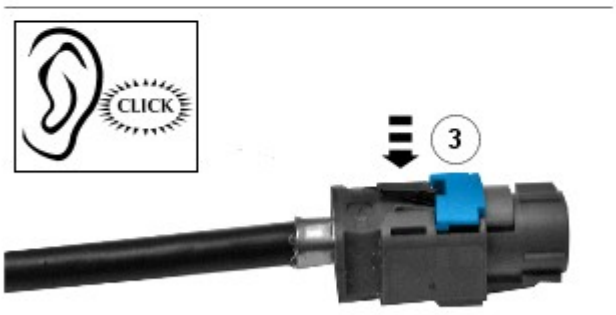

E134007

Install the connector to the camera overlay wiring harness.

- Remove the protective tape.
- Install the electrical connector.
- Secure the locking tab.

7.

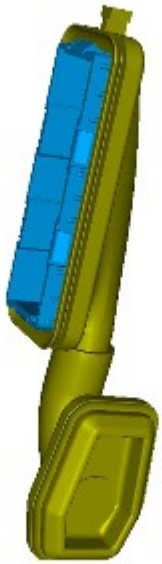

E134266

Secure the gaiter to the gaiter bracket.

8.

CAUTION:

Make sure the electrical connectors are correctly installed and secured.

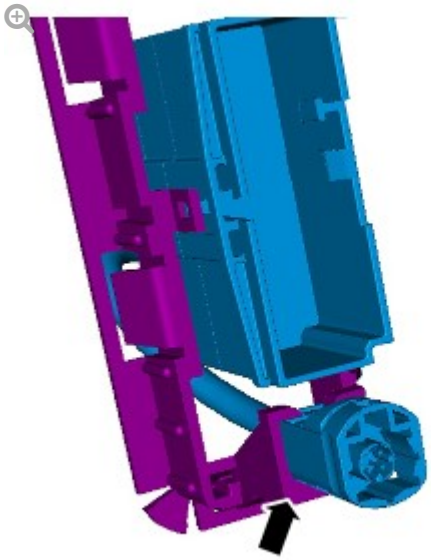

E134268

Secure the camera wiring harness.

9.

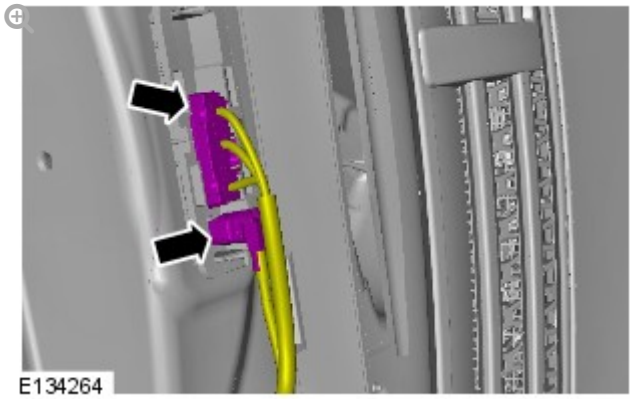

E134264

Connect the 2 electrical connectors.

10.

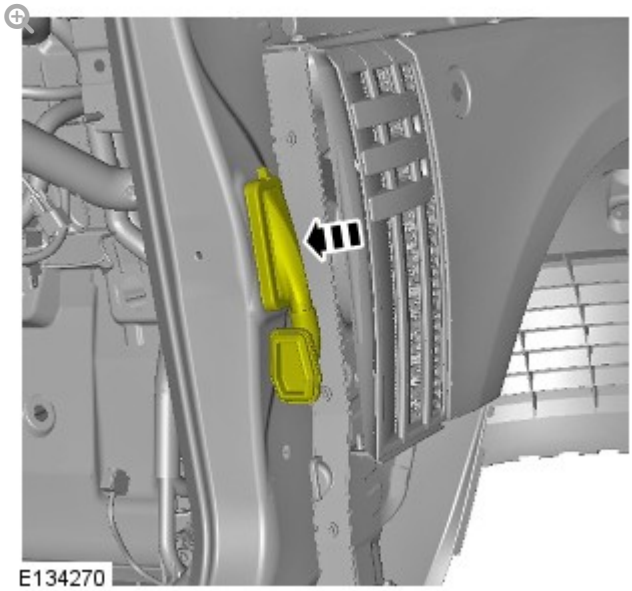

E134270

Secure the gaiter mounting bracket.

- Secure the 6 clips.

11. Install the LH cowl side trim panel. For additional information, refer to: Cowl Side Trim Panel (501-05 Interior Trim and Ornamentation, Removal and Installation).

12. **NOTE:**

Left-hand shown, right-hand similar.

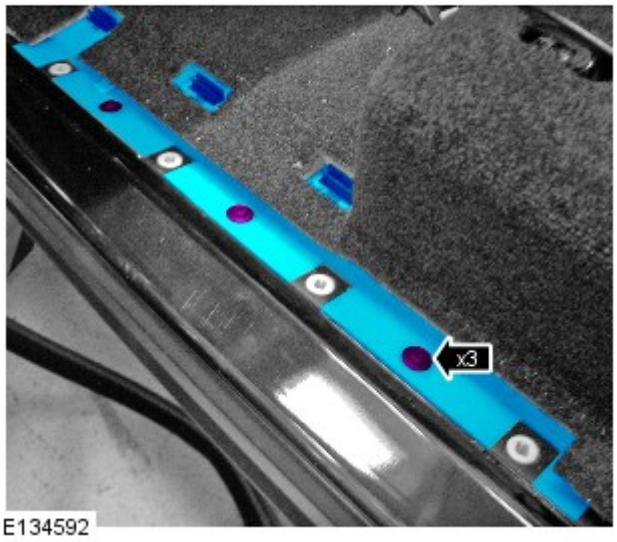

Install the LH wiring harness cover.

- Secure the 3 clips.

13.

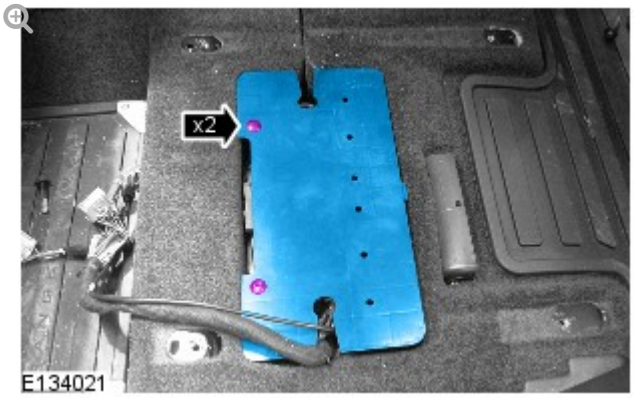

Install the parking aid camera module cover.

Install the parking aid camera module cover.

- Install the 2 scrivets.

14.

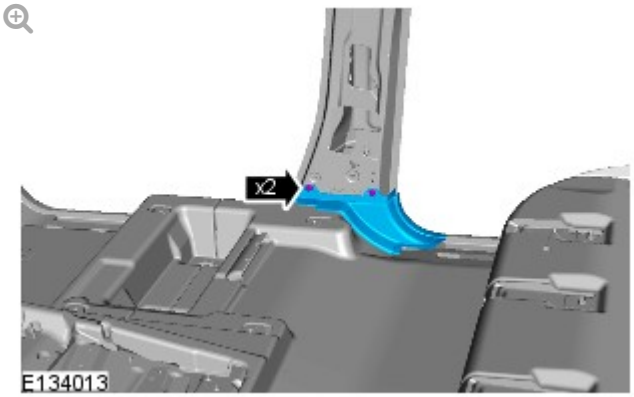

Install the B-pillar floor covering trim panel.

- Secure the 2 clips.
- Repeat to the other side.

15. Install the front scuff plate trim panel.

- Secure the 7 clips.

16. Install the LH front seat.
For additional information, refer to: Front Seat (501-10 Seating, Removal and Installation).

17. Install the LH B-pillar upper trim panel.
For additional information, refer to: B-Pillar Trim Panel (501-05 Interior Trim and Ornamentation, Removal and Installation).

WIRING HARNESSES

FRONT PARKING AID CAMERA WIRING HARNESS – MAIN BODY SECTION (G1371952)

REMOVAL AND INSTALLATION

REMOVAL

CAUTION:

Make sure that the camera overlay wiring harness is not bent excessively during this procedure. Failure to follow this instruction may result in damage to the harness.

1. Remove the LH B-pillar trim panel.
   For additional information, refer to: B-Pillar Trim Panel (501-05 Interior Trim and Ornamentation, Removal and Installation).

2. Repeat procedure for the other side.

3. 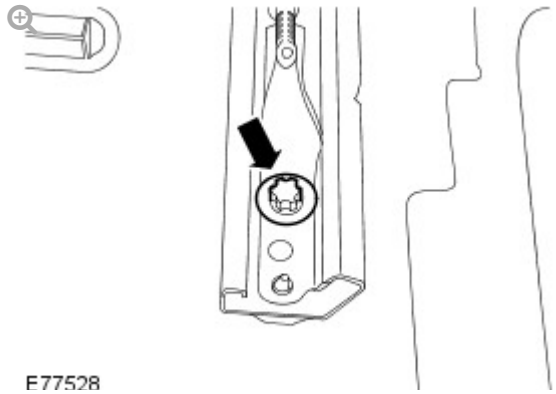

Remove the 2 rear bolts from the LH front seat.

4.

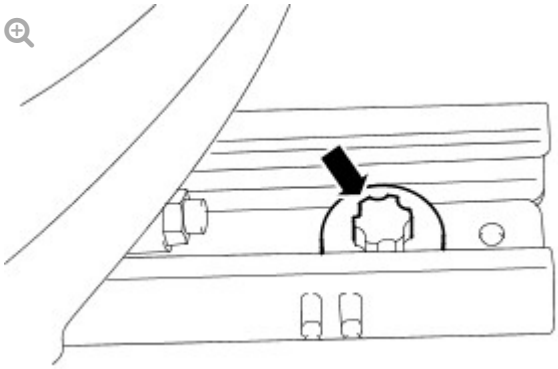

Release the LH front seat.

- Move the LH front seat fully backwards.
- Remove the 2 front seat front bolts.

5. Remove the RH front seat.
For additional information, refer to: Front Seat (501-10 Seating, Removal and Installation).

6.

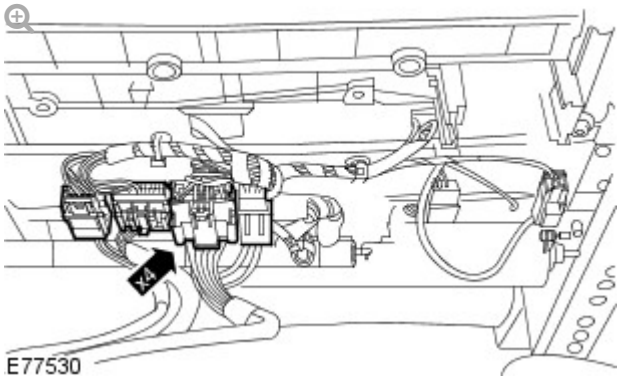

With assistance remove the LH front seat.

- Disconnect the 4 electrical connectors.

7.

NOTE:

Left-hand shown, right-hand similar.

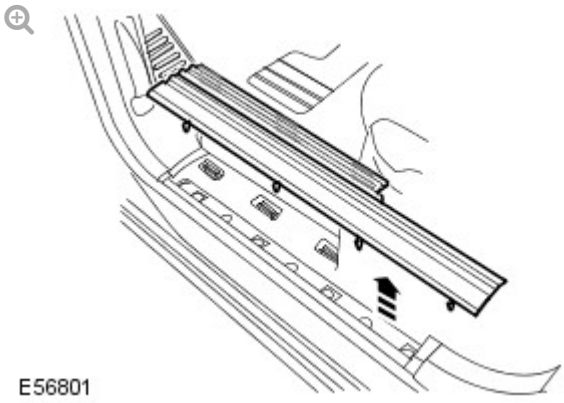

Remove the front scuff plate trim panel.

- Release the 7 clips.
- Repeat to the other side.

8.

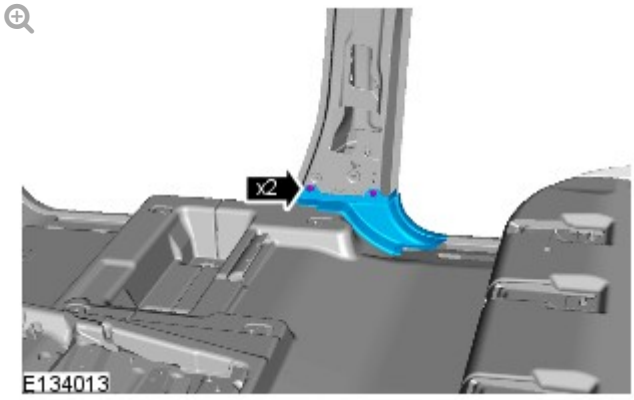

Remove the B-pillar floor covering trim panel.

- Remove the 2 clips.
- Repeat to the other side.

9.

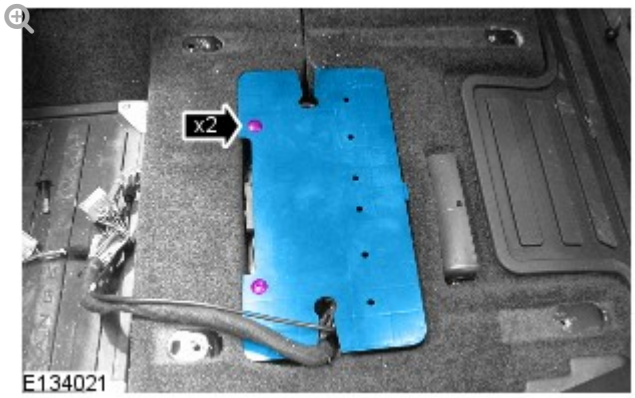

Remove the parking aid camera module cover.

- Remove the 2 scrivets.
- Repeat to the other side.

10.

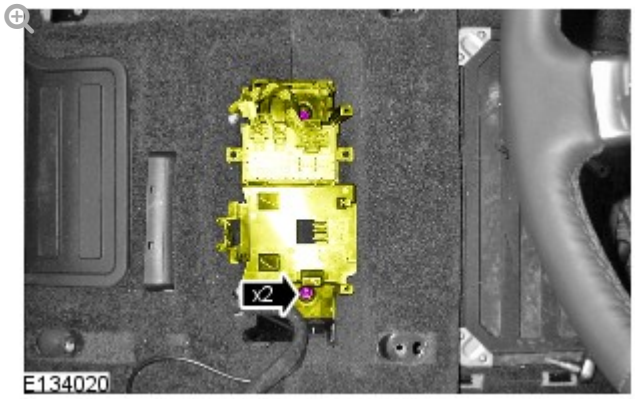

Release the seat heating module bracket.

- Remove the 2 nuts.

11.

NOTE:

Left hand shown, right hand similar.

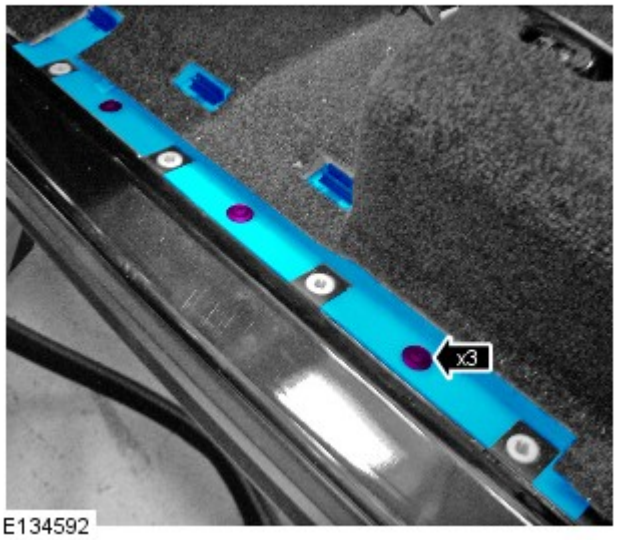

Remove the RH wiring harness cover.

- Remove the 3 clips.

12. Remove the A-pillar trim panel. For additional information, refer to:

A-Pillar Trim Panel (501-05 Interior Trim and Ornamentation

A-Pillar Trim Panel (501-05 Interior Trim and Ornamentation, Removal and Installation).

13.

NOTE:

The left hand front camera wiring harness connectors are coloured white, the right hand front camera wiring harness connectors are coloured black.

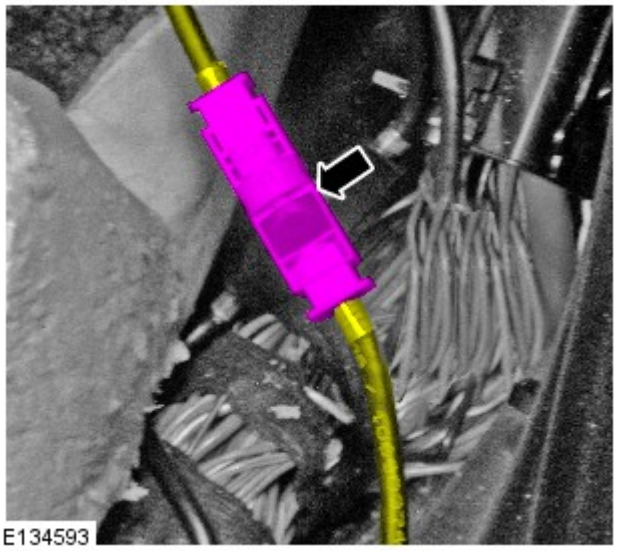

Disconnect the parking aid camera wiring harness.

14.

NOTE:

The left hand front camera wiring harness connectors are coloured white, the right hand front camera wiring harness connectors are coloured black.

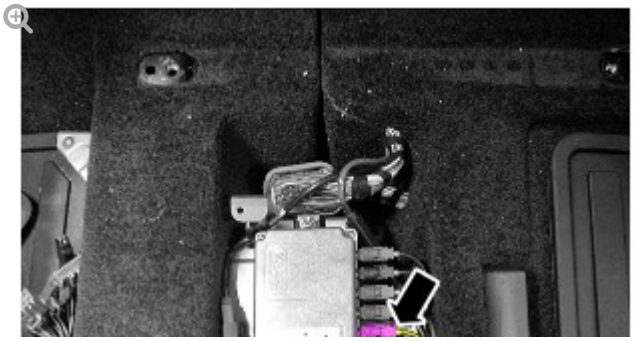

Disconnect the parking aid camera wiring harness.

INSTALLATION

1. **NOTE:**

> Some variation in the illustrations may occur, but the essential information is always correct.

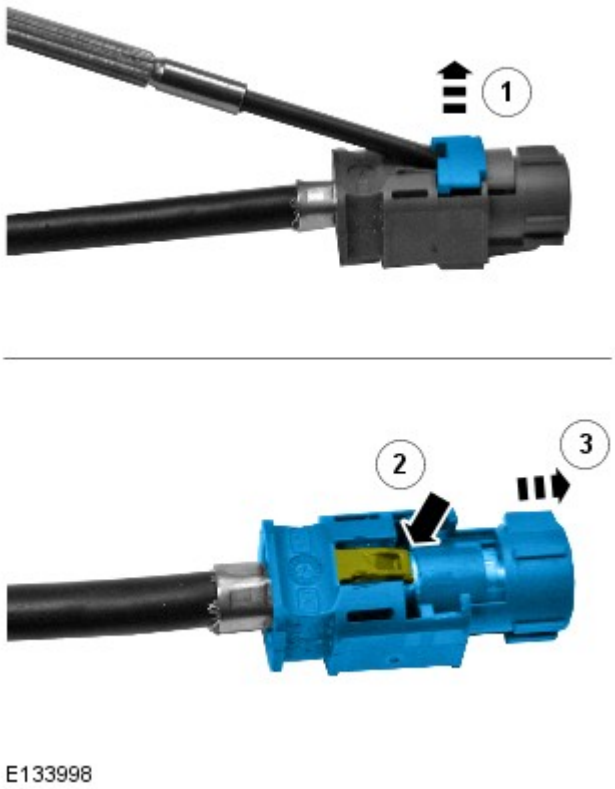

Remove the connector from the module end of the camera overlay wiring harness.

- Remove the locking tab.

- Carefully release the clip.
- Apply suitable tape to protect the end of the camera overlay wiring harness.

2.

CAUTION:

Make sure that the camera overlay wiring harness is not bent excessively during this procedure. Failure to follow this instruction may result in damage to the harness.

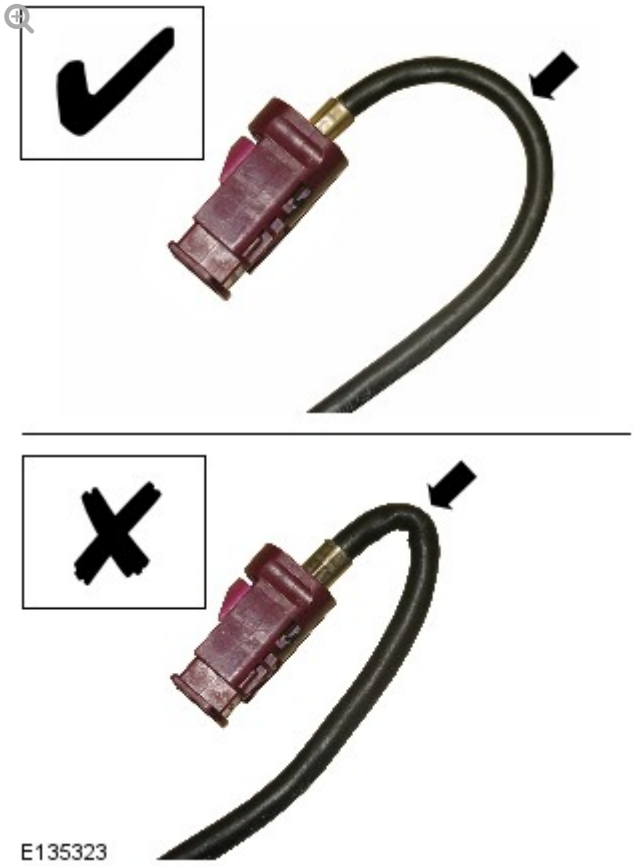

Install the camera overlay wiring harness.

3.

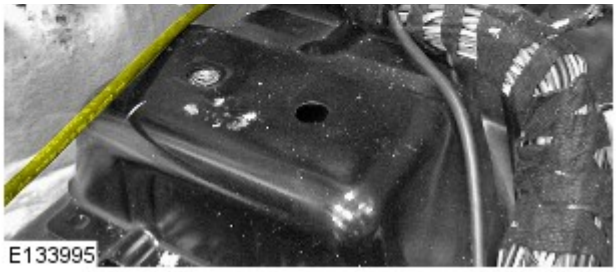

Insert the camera wiring harness under the floor console.

- Route the camera overlay wiring harness along the main body wiring harness up to the camera module.

4.

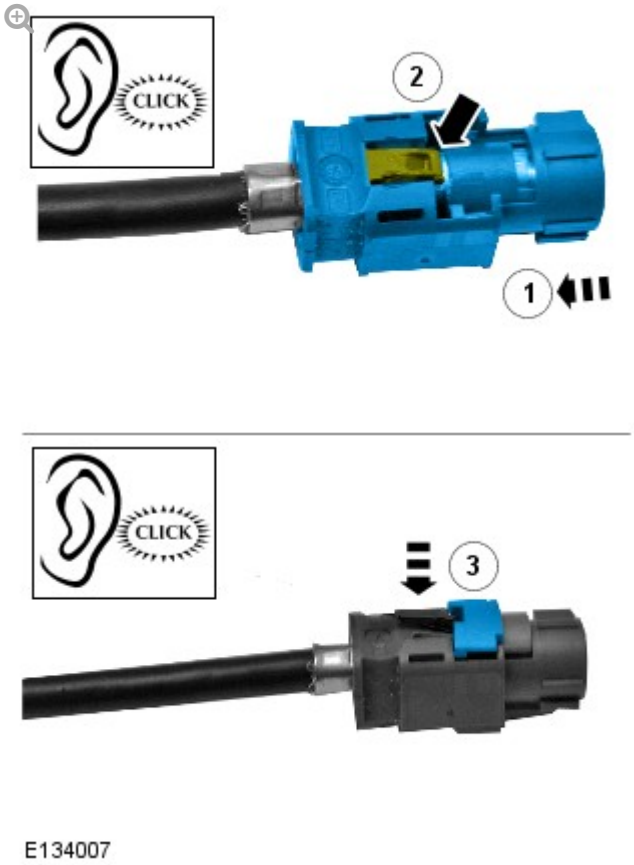

Install the connector to the camera overlay wiring harness.

- Remove the protective tape.
- Install the electrical connector.
- Secure the locking tab.

5.

NOTE:

The left hand front camera wiring harness connectors are

coloured white, the right hand front camera wiring harness connectors are coloured black.

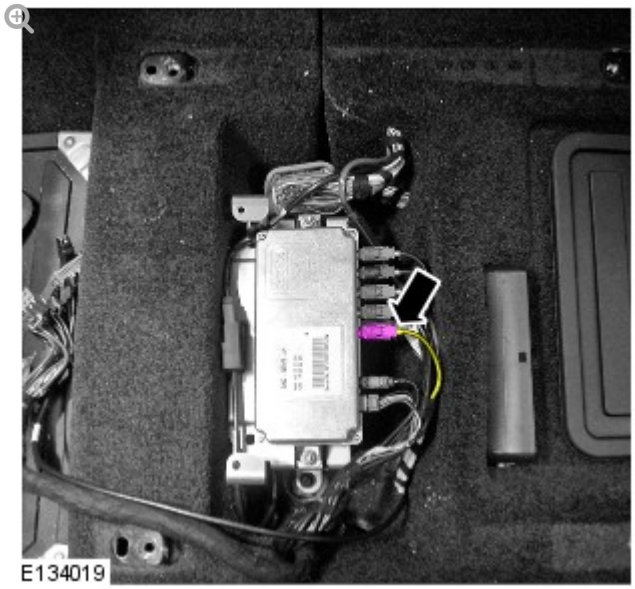

Connect the camera overlay wiring harness.

6.

CAUTION:

Make sure that any tie straps used are not tightened excessively on the camera wiring harness and link leads, Failure to follow this instruction may result in damage to the harness.

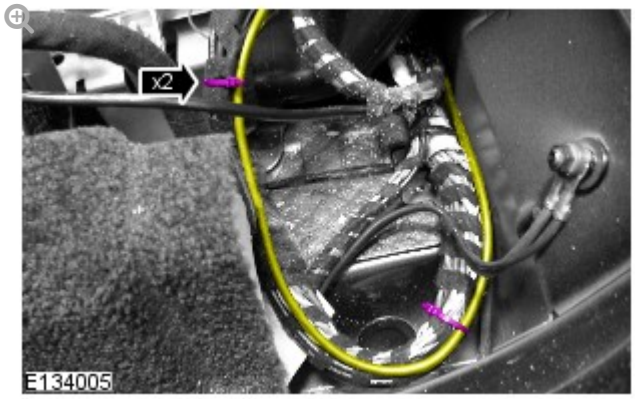

Using suitable tie straps, secure the camera overlay wiring harness to the main body wiring harness.

7. **NOTE:**

The left hand front camera wiring harness connectors are coloured white, the right hand front camera wiring harness connectors are coloured black.

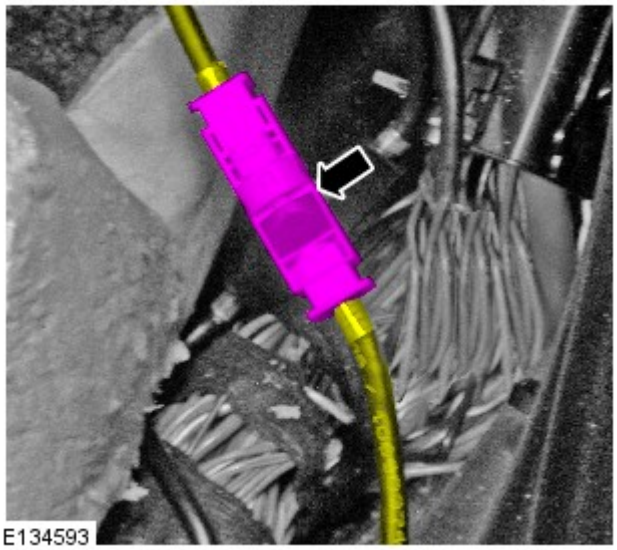

Connect the camera overlay wiring harness.

8. Install the A-pillar trim panel. For additional information, refer to: A-Pillar Trim Panel (501-05 Interior Trim and Ornamentation, Removal and Installation).

9. **NOTE:**

Left hand shown, right hand similar.

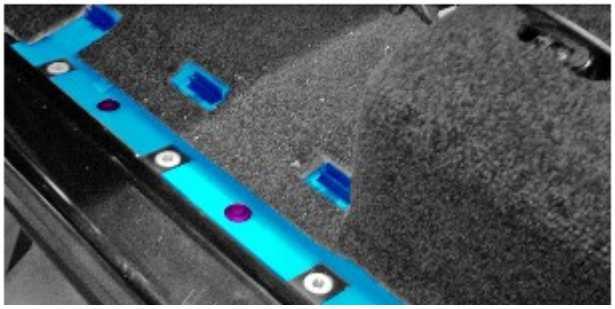

Install the RH wiring harness cover.

- Secure the 3 clips.

10.

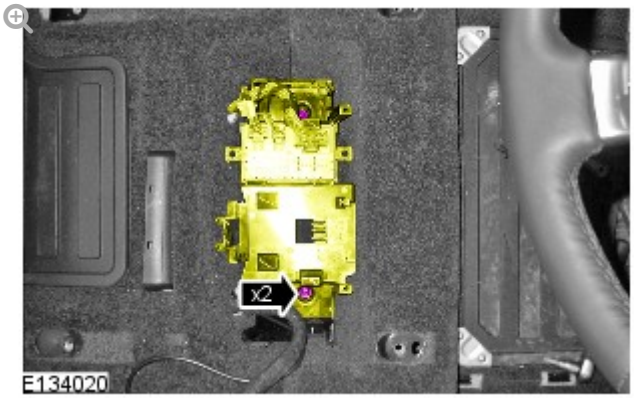

Secure the seat heating module bracket.

- Install the 2 nuts.

11.

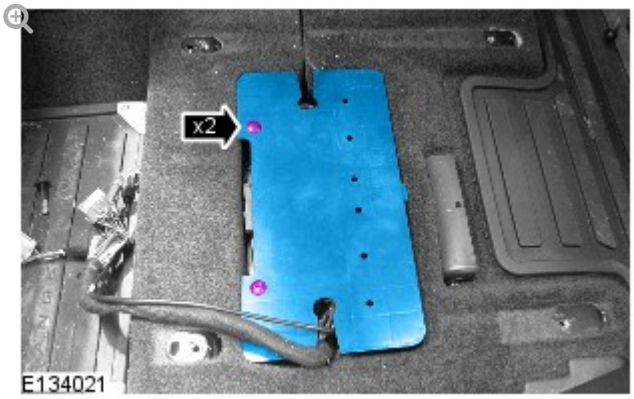

Install the parking aid camera module cover.

- Install the 2 scrivets.

12.

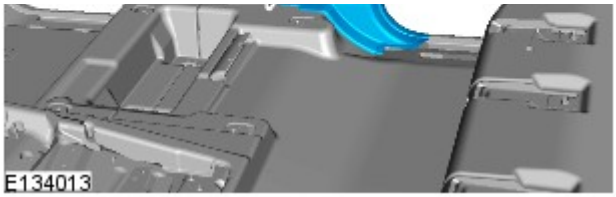

Install the B-pillar floor covering trim panel.

- Secure the 2 clips.
- Repeat to the other side.

13. Install the front scuff plate trim panel.

- Secure the 7 clips.
- Repeat to the other side.

14.

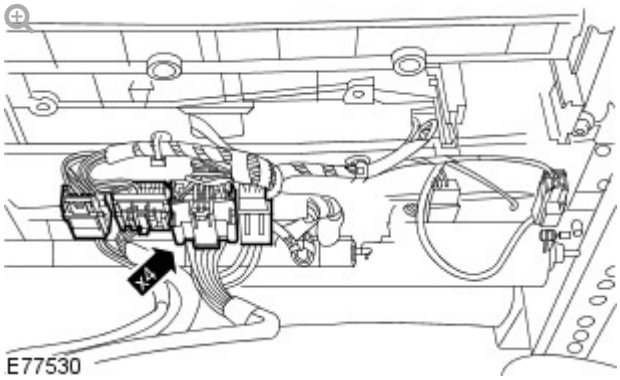

With assistance, install the LH front seat.

- Connect the 4 electrical connectors.

15. Install the RH front seat.
For additional information, refer to: Front Seat (501-10 Seating, Removal and Installation).

16.

NOTE:

Make sure the 3 seat rail covers are fitted to their original positions. Note: The inner front seat rail does not have a seat rail cover.

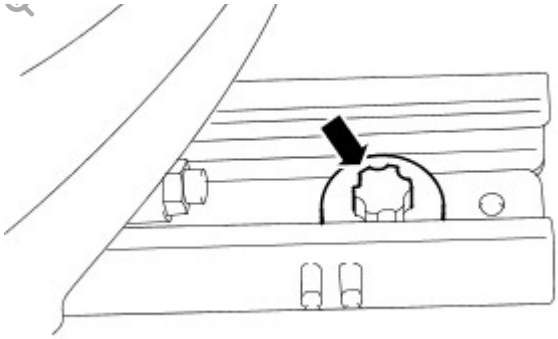

E77529

Install the 2 front bolts to the front seat.

- Align the front seat locating pegs.
- Position the front seat fully rearwards.
- Tighten the front seat front bolts to 45 Nm.

17. **NOTE:**

Make sure the 3 seat rail covers are fitted to their original positions. Note: The inner front seat rail does not have a seat rail cover.

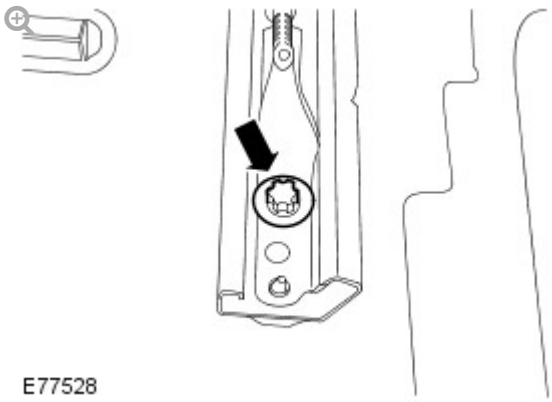

E77528

Install the 2 rear bolts to the front seat.

- Position the front seat fully forwards.
- Tighten the front seat rear bolts to 45 Nm.

18. Install the LH B-pillar upper trim panel.
For additional information, refer to: B-Pillar Trim Panel (501-05 Interior Trim and Ornamentation, Removal and Installation).

19.

CAUTION:

Make sure the safety belt is secure and correctly installed.

Install the RH B-pillar trim panel.

20.

NOTE:

Make sure the safety belt is operating correctly.

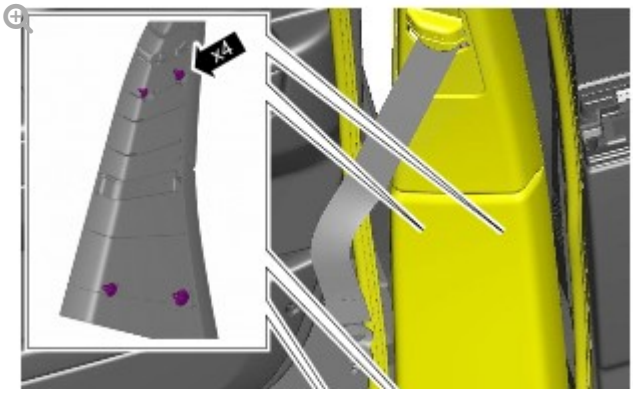

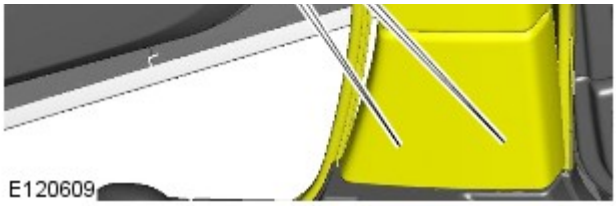

Secure the B-pillar trim panel.

- Secure the 4 clips.
- Secure the front and rear door aperture weatherstrips.

21.

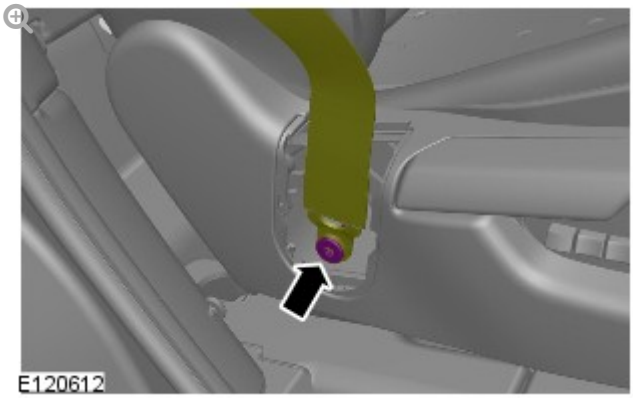

Attach the safety belt lower anchor to the seat.

- Install a new bolt and tighten to 45 Nm.

22.

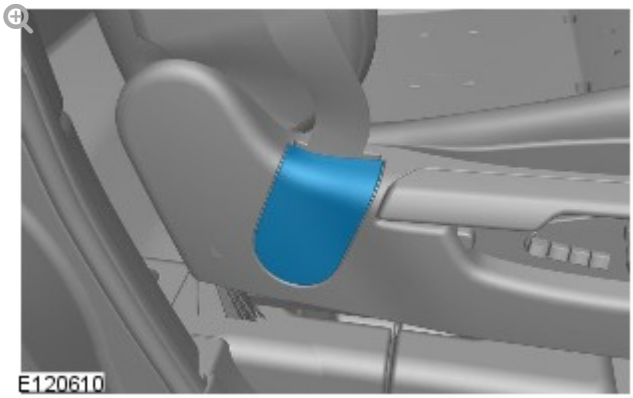

Install the safety belt lower anchor bolt cover.

2012.0 RANGE ROVER (LM), 418-02

WIRING HARNESSES

PARKING AID CAMERA SIGNAL FILTER (G1393969)

REMOVAL AND INSTALLATION

REMOVAL

NOTE:

Identify the correct parking aid camera wiring harness:

- The LH front camera has white connectors.
- The rear camera has blue connectors.
- The LH side view camera has green connectors.
- The RH front camera has black connectors.
- The RH side view camera has magenta connectors.

1.

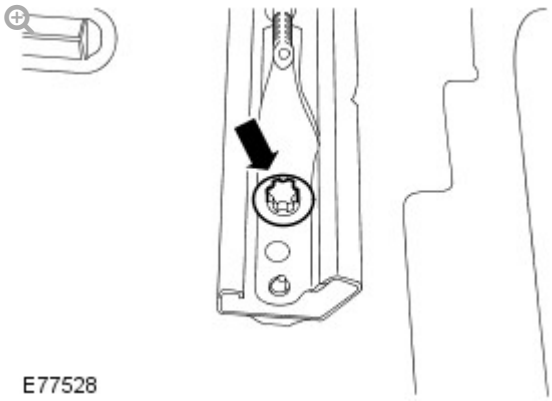

Remove the LH front seat rear bolts.

- Position the seat fully to the fully forward position.
- Remove the 2 bolts.

2.

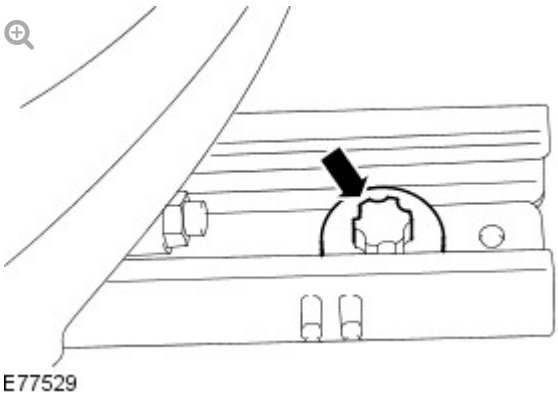

Release the LH front seat.

- Position the seat to the fully rearward position.
- Remove the 2 bolts.

3.

CAUTION:

Make sure that the seat harness is not damaged during the positioning of the seat.

With the aid of another technician, position the seat forwards to access the camera module.

4.

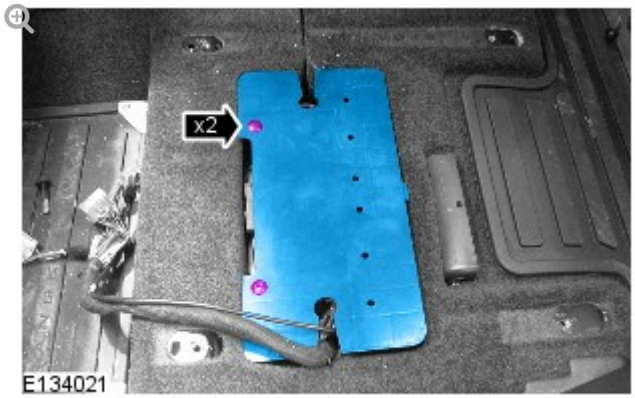

Remove the parking aid camera module cover.

- Remove the 2 scrivets.

INSTALLATION

1.

CAUTION:

Make sure that the camera wiring harness and link leads are not bent excessively during these procedures. Failure to follow this instruction may result in damage to the harness.

Take care when handling the wiring harness and link lead.

2.

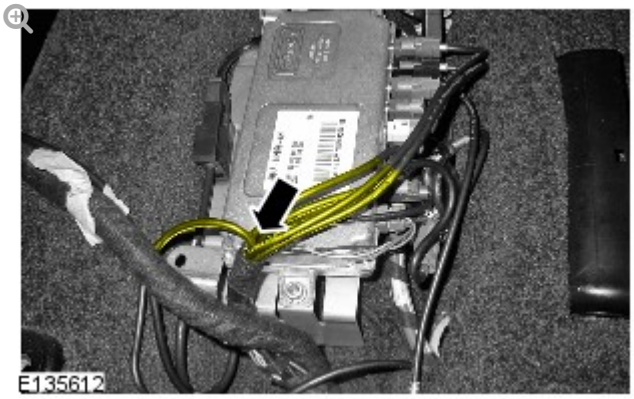

Using a suitable tool remove the camera wiring harness securing tape to the position shown.

3.

Identify the ECU connector on the parking aid camera signal filter.

4.

CAUTION:

Make sure that the correct end of the link lead is installed to the parking aid camera signal filter

NOTE:

LH front camera and rear camera only

E135619

Install the link lead to the connector on the parking aid camera signal filter marked ECU.

5.

CAUTION:

Make sure that the correct end of the link lead is installed to the parking aid camera signal filter

NOTE:

RH front camera, RH side view camera and LH side view camera only

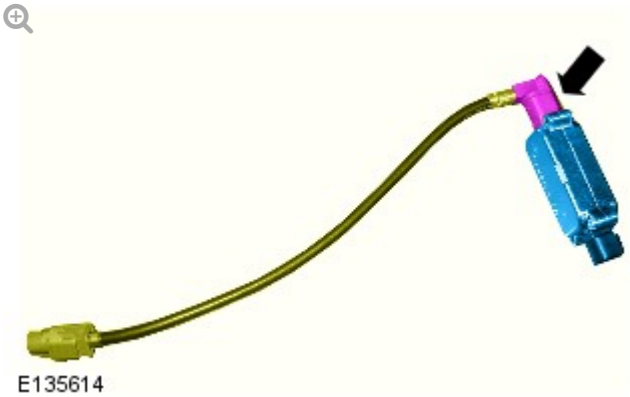

Install the link lead to the connector on the parking aid camera signal filter marked ECU.

6.

CAUTION:

Some variation in the illustrations may occur, but the essential information is always correct.

NOTE:

All parking aid cameras

Install the foam pad to the parking aid camera signal filter.

7.

NOTES:

- LH front camera and rear camera only
- LH front camera shown, rear camera similar.

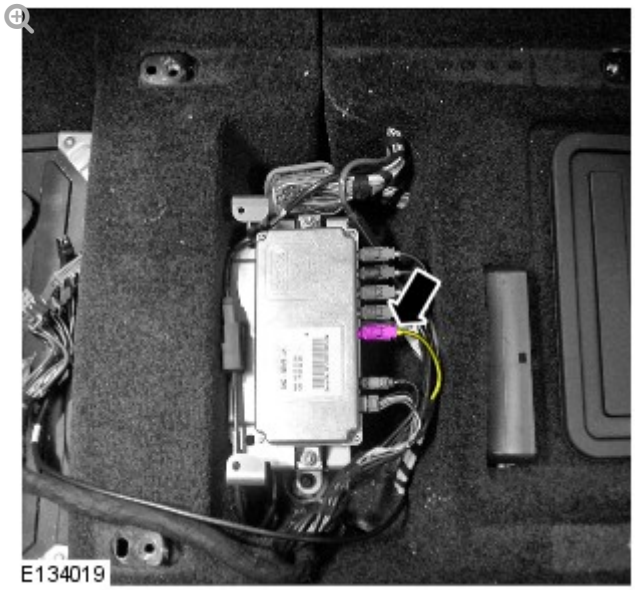

Disconnect the appropriate electrical connector.

8.

NOTES:

- LH front camera only
- Foam pad shown removed for clarity.

Install the parking aid camera signal filter and link lead assembly in the position shown.

- Connect the 2 electrical connectors

9.

NOTES:

- Rear camera only
- Foam pad shown removed for clarity.

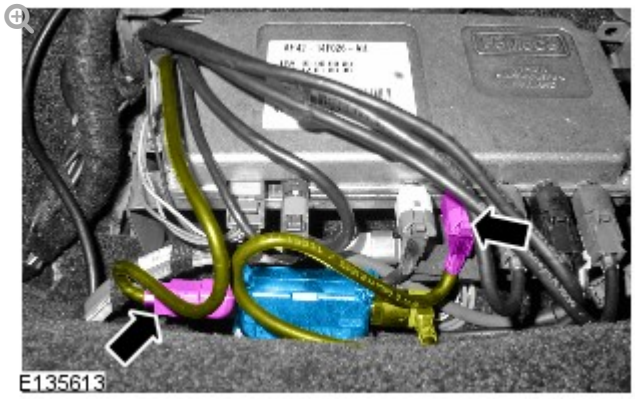

Install the parking aid camera signal filter and link lead assembly in the position shown.

- Connect the 2 electrical connectors

10.

NOTES:

- RH front camera, RH side view camera and LH side view camera only
- LH side view camera shown, RH side view camera and RH front camera similar.

Disconnect the appropriate electrical connector.

11.

NOTES:

- LH side view camera only.
- Foam pad shown removed for clarity.

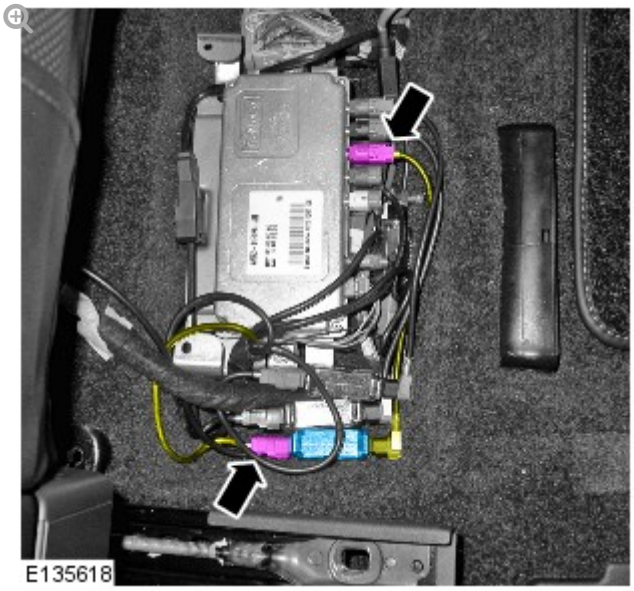

Install the parking aid camera signal filter and link lead assembly in the position shown.

- Connect the 2 electrical connectors

12.

NOTES:

- RH front camera only.
- Foam pad shown removed for clarity.

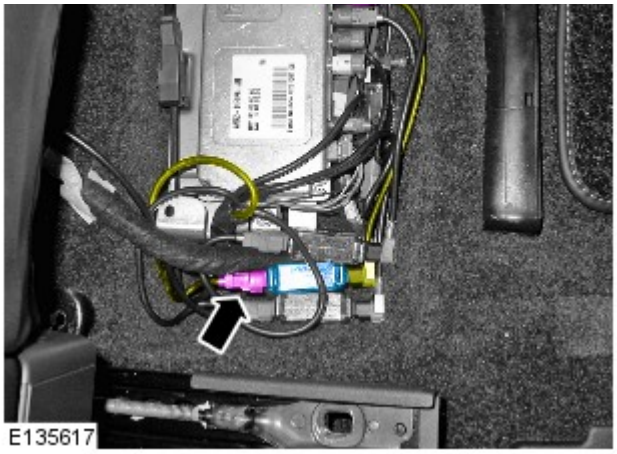

Install the parking aid camera signal filter and link lead assembly in the position shown.

- Connect the 2 electrical connectors

13.

NOTES:

- RH side view camera only.
- Foam pad shown removed for clarity.

Install the parking aid camera signal filter and link lead assembly in the position shown.

- Connect the 2 electrical connectors

14.

NOTE:

NOTE:

All parking aid cameras

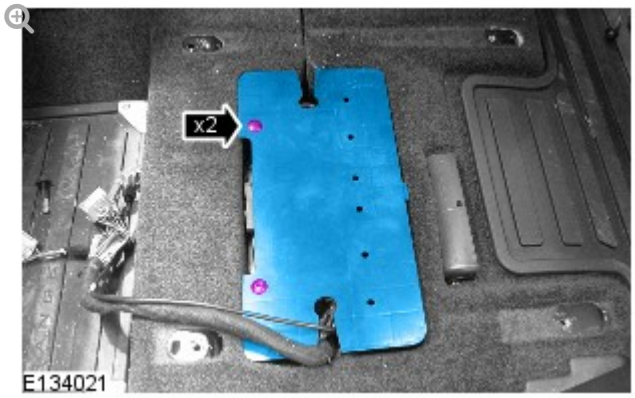

Install the parking aid camera module cover.

- Secure the 2 scrivets.

15.

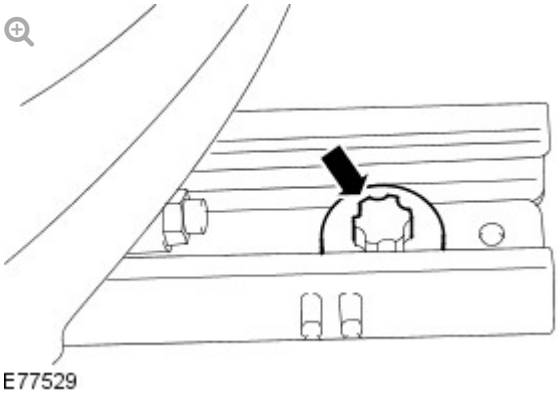

With the aid of another technician, install the LH front seat.

- Align the front seat locating pegs.
- Tighten the bolts to 45 Nm .

16.

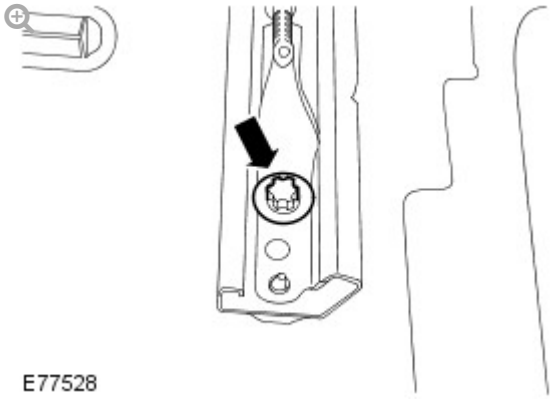

Secure the LH front seat.

- Position the front seat fully forwards.
- Tighten the bolts to 45 Nm .

2012.0 RANGE ROVER (LM), 418-02

WIRING HARNESSES

REAR PARKING AID CAMERA LINK WIRING HARNESS (G1426518)

REMOVAL AND INSTALLATION

REMOVAL

1. Refer to: Rear Spoiler (501-08 Exterior Trim and Ornamentation, Removal and Installation).

2.

INSTALLATION

1. To install, reverse the removal procedure.

FRONT PARKING AID CAMERA WIRING HARNESS – BUMPER SECTION (G1429571)

REMOVAL AND INSTALLATION

REMOVAL

1. **WARNING:**

   Make sure to support the vehicle with axle stands.

   Raise and support the vehicle.

2. Remove the front bumper cover.
   For additional information, refer to: Front Bumper Cover (501-19 Bumpers, Removal and Installation).

3. **NOTES:**

   - Some variation in the illustrations may occur, but the essential information is always correct.
   - Right-hand shown, left-hand similar.

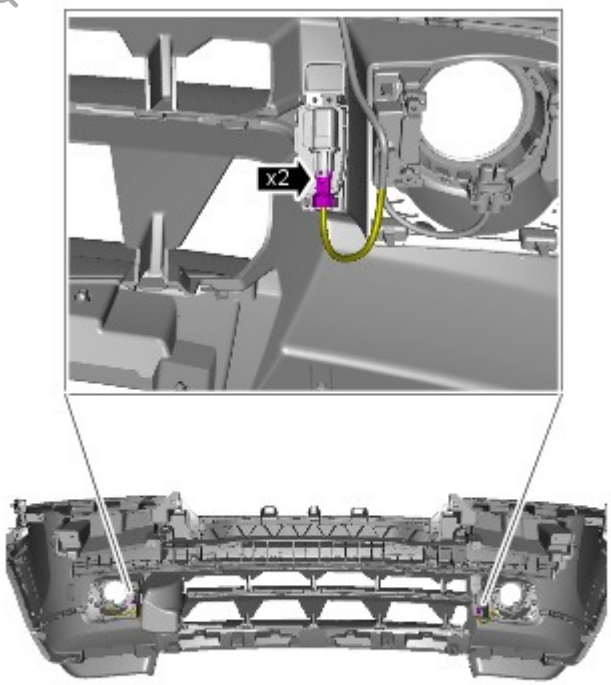

E136471

Disconnect the electrical connector.

INSTALLATION

1. **CAUTION:**

Make sure that the camera overlay wiring harness is not bent excessively during this procedure. Failure to follow this instruction may result in damage to the harness.

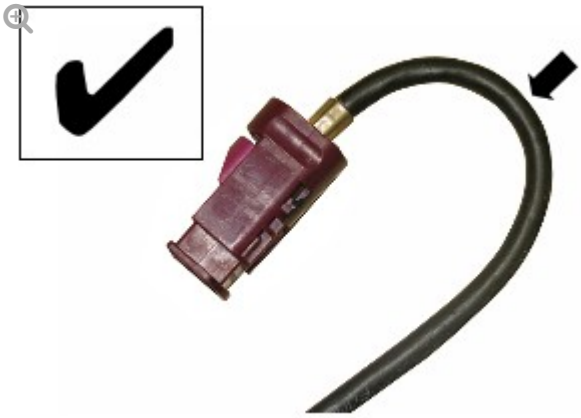

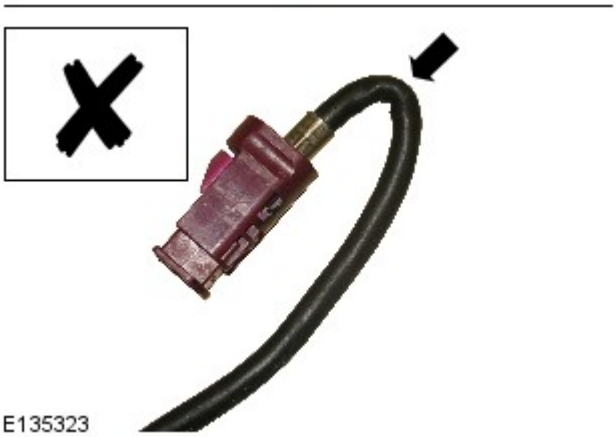

Install the wiring harness

2.

NOTES:

- Some variation in the illustrations may occur, but the essential information is always correct.
- Right-hand shown, left-hand similar.

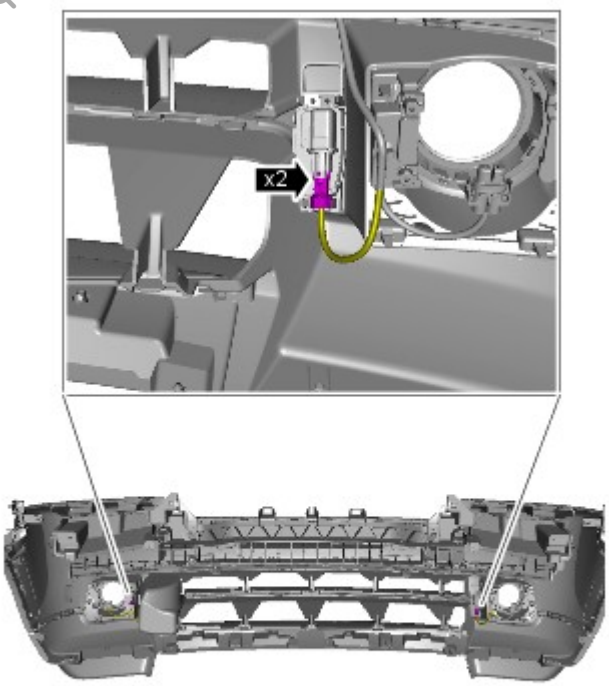

Connect the electrical connector.

3. **CAUTION:**

Make sure that excessive force is not used when installing the tie straps to the wiring harness. Failure to follow this instruction may result in damage to the vehicle.

Using suitable tie straps, secure the camera overlay wiring harness to the bumper wiring harness.

4. Install the front bumper cover.
For additional information, refer to: Front Bumper Cover (501-19 Bumpers, Removal and Installation).

2012.0 RANGE ROVER (LM), 418-02

WIRING HARNESSES

SIDE PARKING AID CAMERA WIRING HARNESS – FRONT DOOR SECTION (G1429572)

REMOVAL

1. **NOTE:**

   Left-hand shown, right-hand similar.

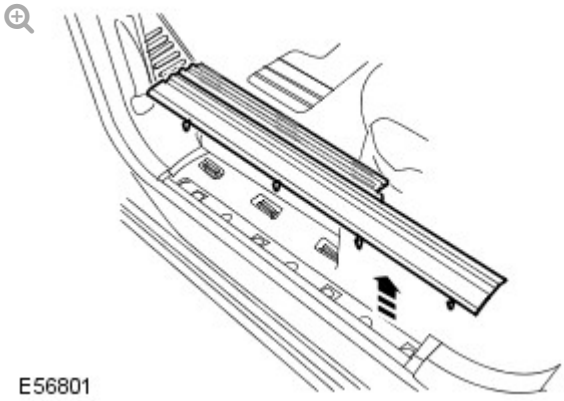

   Remove the front scuff plate trim panel.

   - Release the 7 clips.

2. Remove the cowl side trim panel. For additional information, refer to: Cowl Side Trim Panel (501-05 Interior Trim and Ornamentation, Removal and Installation).

3. **NOTES:**

   - Door shown removed for clarity.
   - Right-hand shown, left-hand similar.

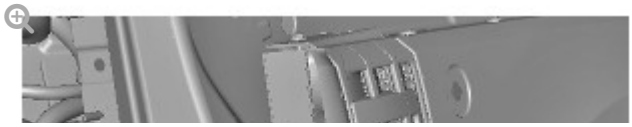

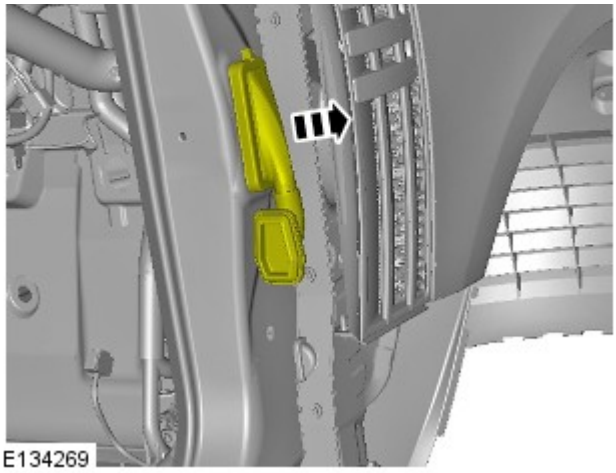

Release the gaiter.

4. **NOTE:**

Right-hand shown, left-hand similar.

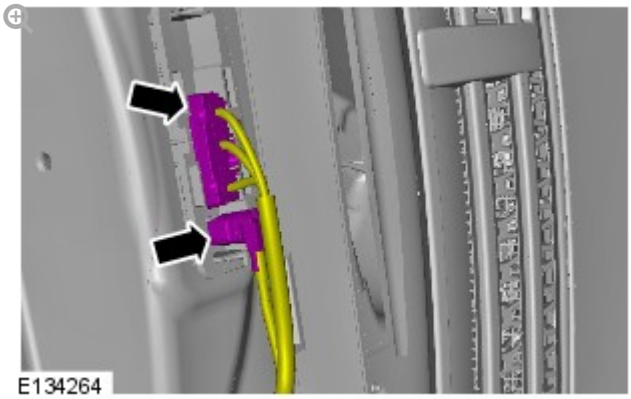

Disconnect the 2 electrical connectors.

5. **NOTE:**

Right-hand shown, left-hand similar.

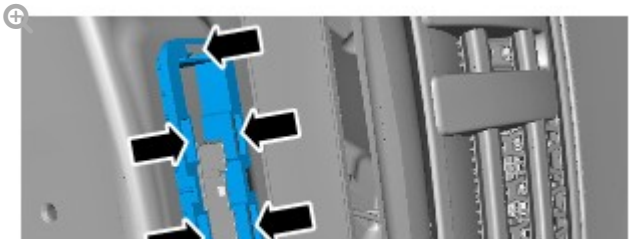

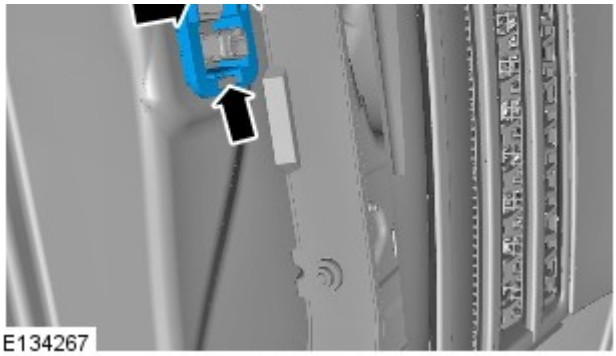

Remove the gaiter mounting bracket.

- Carefully release the 6 clips.

6. **NOTE:**

Right-hand shown, left-hand similar.

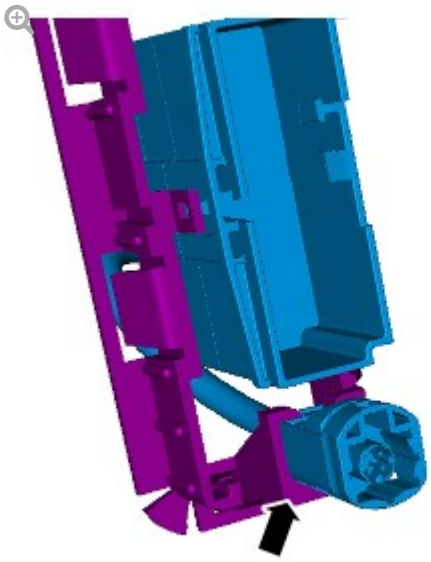

Release the electrical connector from the bracket.

7. Remove the front door speaker.
For additional information, refer to: Front Door Speaker (415-03 Speakers, Removal and Installation).

8.

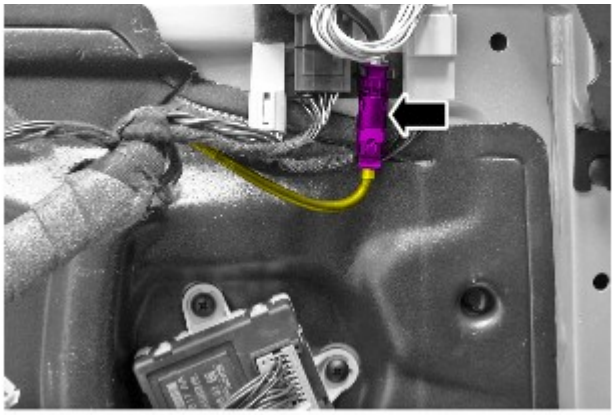

E136474

Disconnect the electrical connector.

INSTALLATION

1. **CAUTION:**

> Make sure that the camera overlay wiring harness is not bent excessively during this procedure. Failure to follow this instruction may result in damage to the harness.

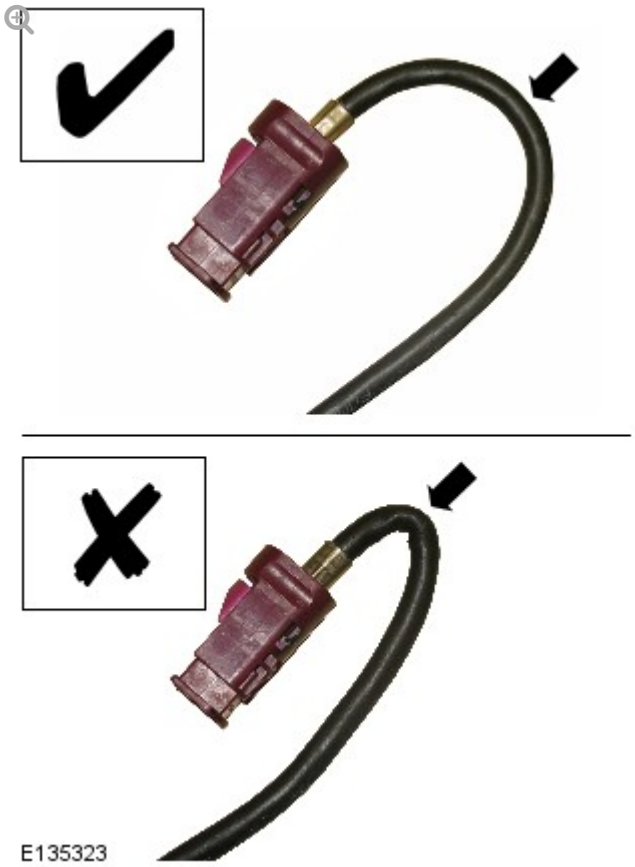

E135323

Install the camera overlay wiring harness.

2.

NOTE:

Some variation in the illustrations may occur, but the essential information is always correct.

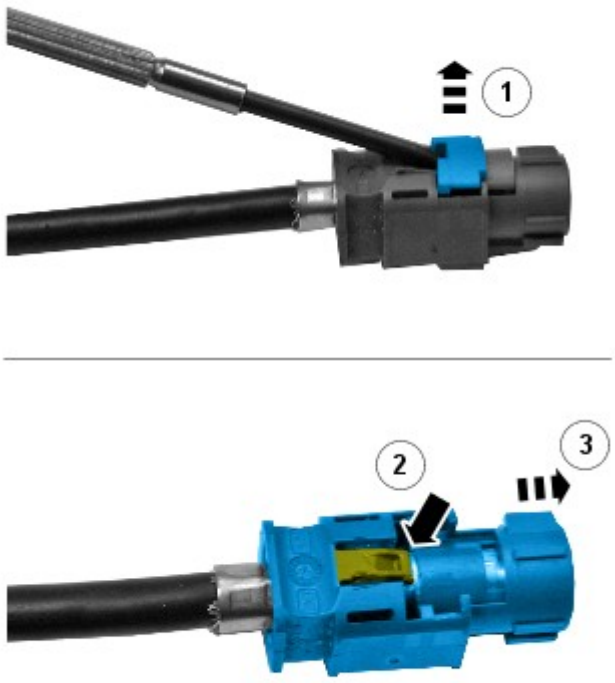

E133998

Remove the connector from the camera wiring harness.

- Remove the locking tab.
- Carefully release the clip.
- Apply suitable tape to protect the end of the camera wiring harness.

3.

E134896

Using suitable tape, secure a suitable rod to the camera overlay wiring harness.

4.

E136473

Carefully feed the camera overlay wiring harness through the gaiter.

5.

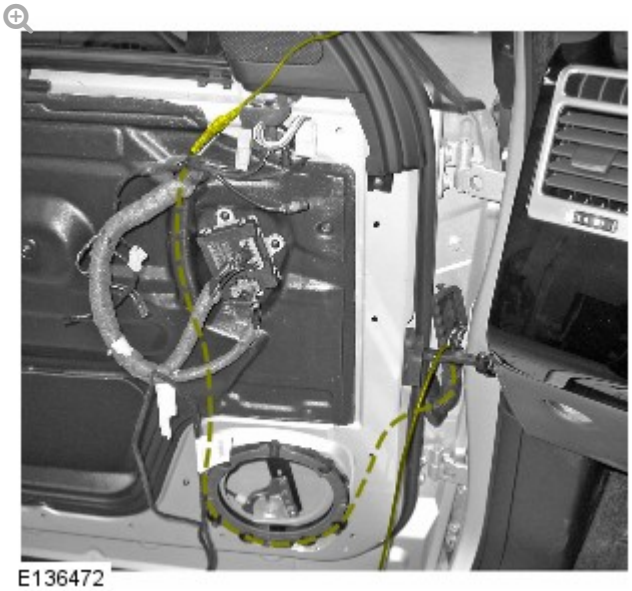

E136472

Carefully feed the camera overlay wiring harness along the door wiring harness to the door mirror.

6.

CAUTIONS:

- Make sure that the camera overlay harness is correctly routed and clear of the front door window regulator and motor. Failure to follow this instruction may result in damage to the vehicle.
- Make sure that excessive force is not used when installing the tie straps to the wiring harness. Failure to follow this instruction may result in damage to the vehicle.

Using suitable tie straps, secure the camera overlay harness to the door wiring harness.

7.

NOTE:

Some variation in the illustrations may occur, but the essential information is always correct.

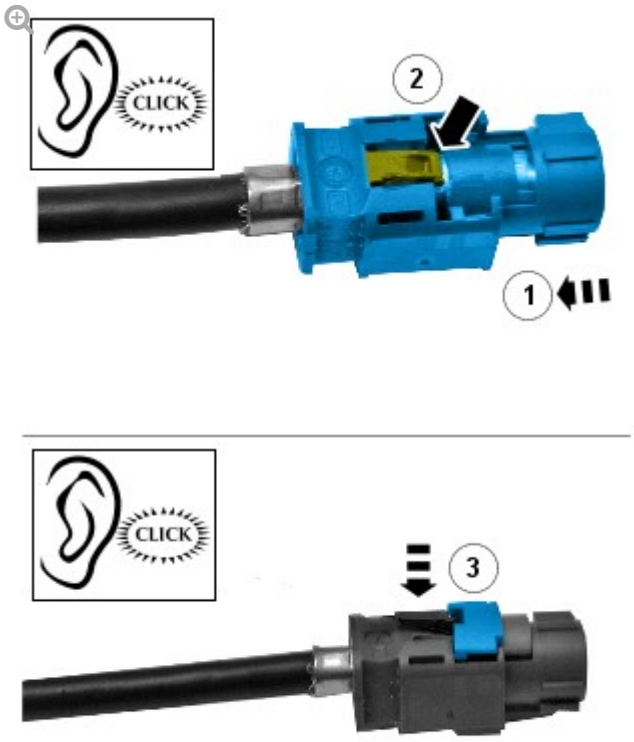

E134007

Install the connector to the camera overlay wiring harness.

- Remove the protective tape.
- Install the electrical connector.
- Secure the locking tab.

8.

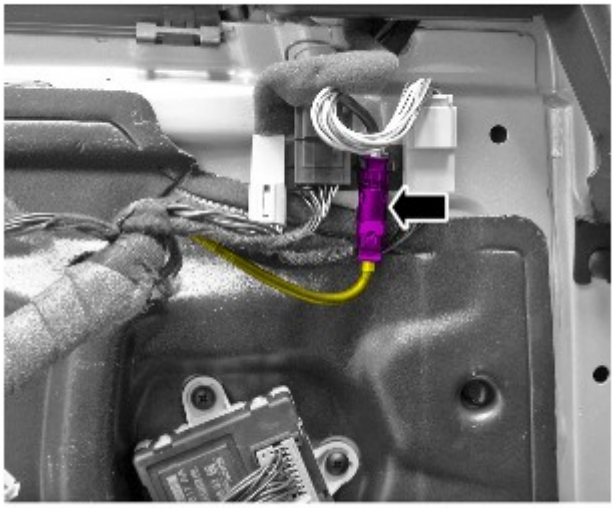

E136474

Connect the electrical connector.

9.

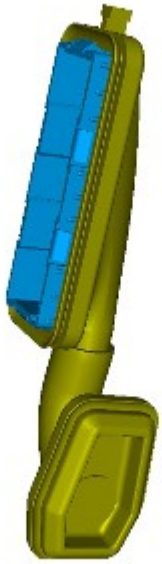

E134266

Secure the gaiter to the gaiter bracket.

10.

CAUTION:

Make sure the electrical connectors are correctly installed and secured.

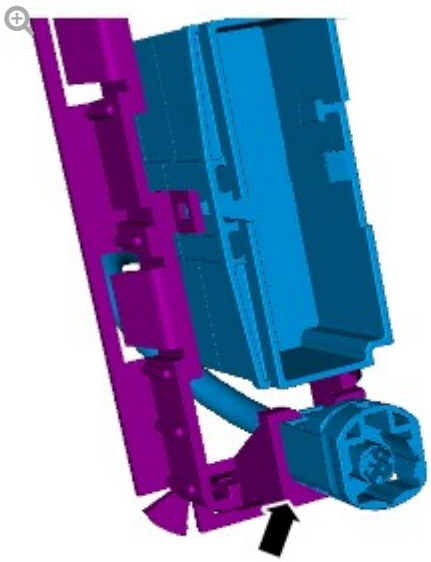

E134268

Secure the camera wiring harness.

11.

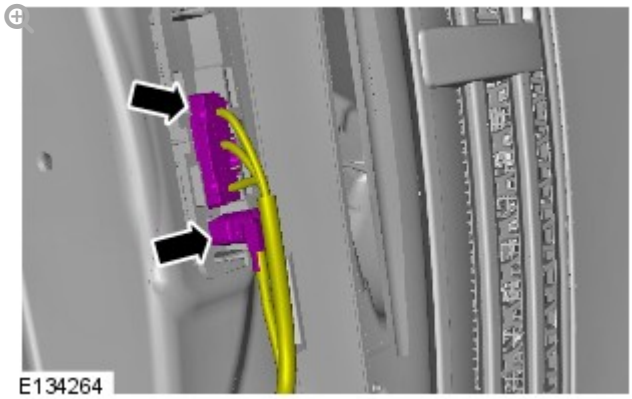

E134264

Connect the 2 electrical connectors.

12.

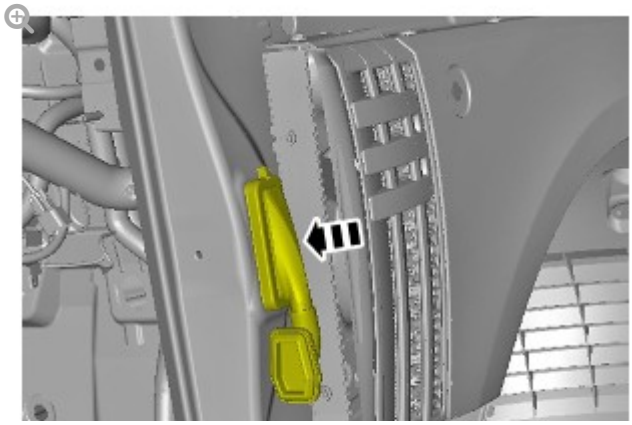

Secure the gaiter mounting bracket.

- Secure the 6 clips.

13. Install the LH cowl side trim panel. For additional information, refer to: Cowl Side Trim Panel (501-05 Interior Trim and Ornamentation, Removal and Installation).

14. **NOTE:**

Left-hand shown, right-hand similar.

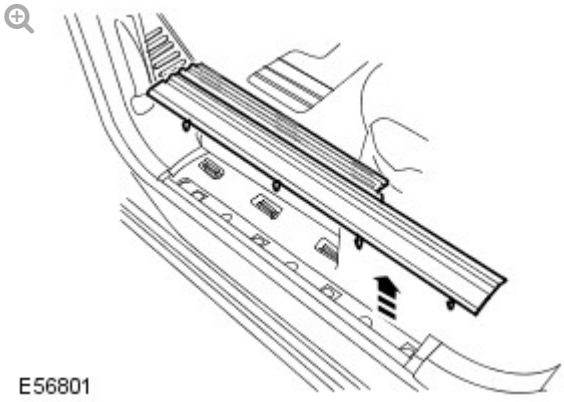

Install the front scuff plate trim panel.

- Secure the 7 clips.

15. Install the front door speaker.
For additional information, refer to: Front Door Speaker (415-03 Speakers, Removal and Installation).

ANTI-THEFT – ACTIVE

Torque Specifications

DESCRIPTION	NM	LB-FT
RH Hood latch Torx bolts	10	7
Security antenna	6	4

2012.0 RANGE ROVER (LM), 419-01

ANTI-THEFT - ACTIVE

DESCRIPTION AND OPERATION

COMPONENT LOCATIONS

NOTE:

right-hand drive (RHD) installation shown, left-hand drive (LHD) installation similar.

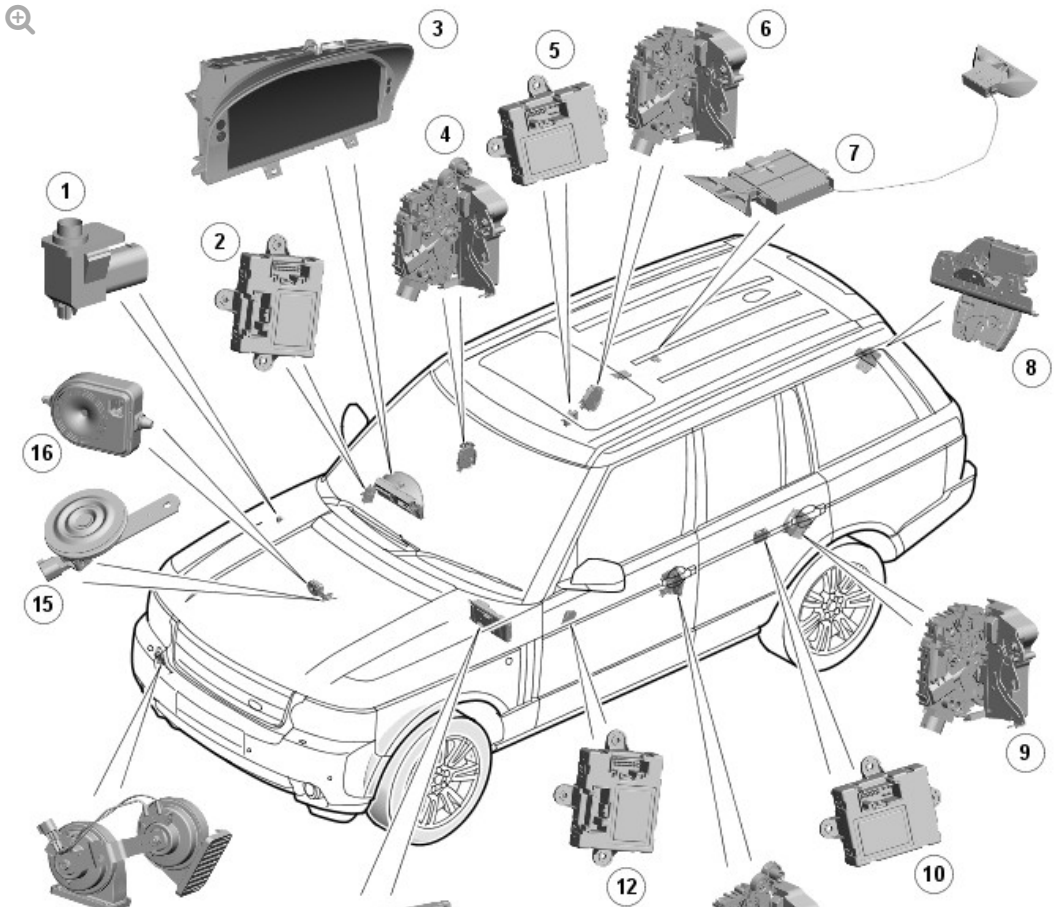

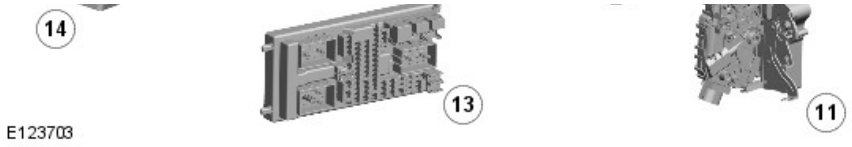

ITEM	DESCRIPTION
1	Hood ajar switch
2	Driver door module
3	Instrument cluster
4	Driver door latch
5	Rear door module
6	Rear door latch
7	Volumetric sensor
8	Upper tailgate latch
9	Rear door latch
10	Rear door module
11	Passenger door latch
12	Passenger door module
13	CJB (central junction box)
14	Horns
15	Passive sounder (if fitted)
16	BBUS/Tilt sensor (if fitted)

GENERAL

The active anti-theft system monitors the hinged panels for unauthorized opening. On some vehicles, the active anti-theft system also incorporates interior monitoring and vehicle tilt sensing functions. If an alarm event is detected, the active anti-theft system generates audible and visual alarm signals. The active anti-theft system is controlled by the CJB and is configured to automatically arm and disarm with operation of the CLS (central locking system).

For additional information, refer to: Handles, Locks, Latches and Entry

Systems (501-14, Description and Operation).

The active anti-theft system incorporates:

- An alarm indicator.
- A BBUS (if fitted).
- A volumetric sensor (if fitted).
- A tilt sensor (if fitted).

The active anti-theft system also uses:

- The CJB.
- The hood, door and tailgate ajar switches.
  For additional information, refer to: Handles, Locks, Latches and Entry Systems (501-14, Description and Operation).

ALARM INDICATOR

The alarm indicator is installed in the instrument cluster to provide a visual indication of the active anti-theft system status. Operation of the alarm indicator is controlled by a hardwired input from the CJB, which pulls the input to ground to illuminate the alarm indicator.

The alarm LED will begin to flash once every 2 seconds to indicate that the vehicle alarm is armed.

BBUS

The BBUS is installed in the engine compartment on the RH (right-hand)side of the bulk head. Depending on the CJB configuration, the BBUS can be used to produce the audio acknowledgment for arming and disarming of the active anti-theft system as well as the audio warning after an alarm has been triggered.

The BBUS is normally operated by a permanent battery feed from the central junction box (CJB). An integral 7.2 V rechargeable battery powers the BBUS if it is disconnected from the vehicle battery.

The BBUS sounds when it receives an alarm or acknowledgment signal from the CJB. While the active anti-theft system is armed, the BBUS also monitors the battery power supply and the arm/disarm signal line from the CJB, and operates the sounder if the battery power supply or the arm/disarm signal line is disconnected. The CJB arms and disarms the BBUS together with the rest of the active anti-theft system.

Once an alarm has been triggered, the BBUS cycles the sounder on for 30 seconds and off for 10 seconds, for 5 minutes or until it receives a disarm signal from the CJB. If the alarm trigger is still present, the 5 minutes of on/off cycles is repeated a further 2 times.

VOLUMETRIC SENSOR (IF FITTED)

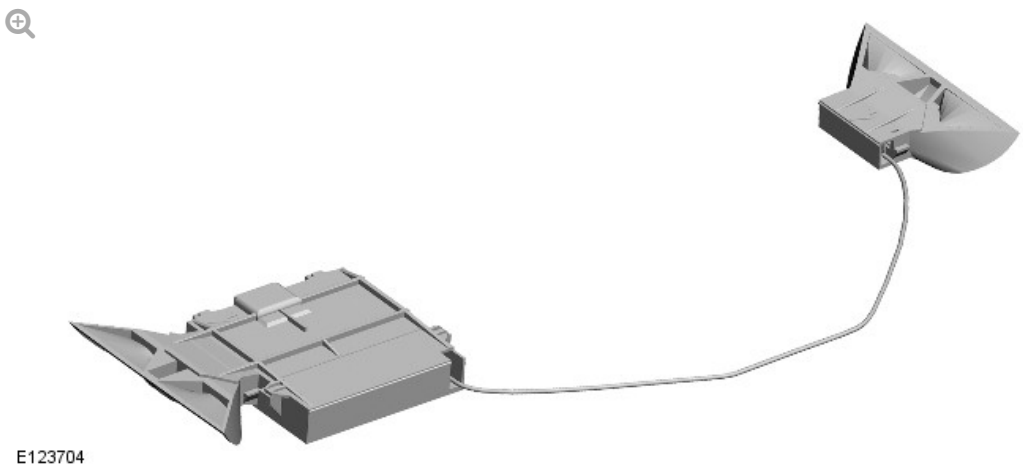

The volumetric sensor is installed behind openings in the rear interior lamp and monitors for intrusion into the passenger compartment when the alarm is armed.

The volumetric sensor consists of a microcontroller, two acoustic transmitters one acoustic receiver. One transmitter pair and a receiver face forwards and one transmitter faces rearwards to ensure complete coverage of the passenger compartment. The front transmitter pair and receiver are in a rubber mounting attached to the microcontroller housing. The rear transmitter is in a remote rubber mounting and connected to the microcontroller housing by a two wire lead.

The volumetric sensor is powered by a permanent battery feed from the CJB. The CJB activates and de-activates the volumetric sensor when it arms

and disarms the active anti-theft system. When the volumetric sensor is active it outputs ultrasonic pulses from the transmitters and checks the echoes picked up by the receivers for changes to the passenger compartment profile. If it detects a change of profile indicating movement in the passenger compartment the volumetric sensor reports the alarm to the CJB.

Each time the volumetric sensor is activated it performs a self test. If there are no faults the volumetric sensor sends an acknowledgment signal to the CJB. If the CJB does not receive the acknowledgment signal it de-activates the volumetric sensor.

TILT SENSOR (IF FITTED)

The tilt sensor monitors for changes of vehicle attitude while the alarm is armed. The tilt sensor is installed within the BBUS sounder and is located in the engine compartment on the RHside of the bulk head.

The tilt sensor incorporates a two axis sensor controlled by a microprocessor. A permanent battery feed from the CJB powers the tilt sensor. The CJB activates and de-activates the tilt sensor when it arms and disarms the active anti-theft system.

The tilt sensor measures the longitudinal and transverse angles of the vehicle over a range of ±16 degrees from the horizontal. When the tilt sensor is activated, it stores the current angles in memory. If the vehicle changes attitude in either direction by more than the limit the tilt sensor sends an alarm signal to the CJB, which triggers the BBUS.

NOTE:

If the security systems detects a fault with the tilt sensor it will indicate this by emitting 2 error tones from the alarm siren when the vehicle is unlocked and disarmed.

Each time the tilt sensor is activated it performs a self test. If there are no faults the tilt sensor sends an acknowledgment signal to the CJB. If the CJB

does not receive the acknowledgment signal it de-activates the tilt sensor.

SYSTEM OPERATION

The active anti-theft system arms and disarms in conjunction with the locking and unlocking of the central locking system. Depending on the configuration of the CJB, the active anti-theft system can be armed and disarmed when the locking system is activated with the smart key. Visual and audible confirmation of the active anti-theft system arming and disarming, using the direction indicators and the BBUS, are also configurable in the CJB.

When the vehicle is superlocked, the CJB sends an arming signal to the tilt sensor, the BBUS and the volumetric sensor. If the CJB does not receive an acknowledgment signal from the tilt sensor and the volumetric sensor within 1 second, the CJB disables the associated alarm feature for the remainder of the armed cycle.

To set alarm sensors override/partial alarm protection, select alarm sensors to off on the vehicle instrument cluster menu and then press the lock button twice within three seconds. The hazard warning lights will flash twice to confirm the locking state and an audible arm chirp will sound to confirm the vehicle is double locked. The alarm LED in the vehicle instrument cluster will begin to flash once every 2 seconds to confirm the alarm state. This feature prevents accidental triggering of the active anti-theft system during transportation of the vehicle or if a pet is left in the vehicle.

VOLUMETRIC SENSING

The CJB begins volumetric sensing 30 seconds after the alarm being armed and the vehicle is double locked.

If the alarm has been triggered, the CJB will ignore further volumetric sensor signals for the duration of the alarm. The CJB resumes volumetric sensing 30 seconds after the alarm has stopped sounding.

Volumetric sensing and tilt sensing are disabled if the CJB receives a tail door open signal from the smart key. The CJB resumes volumetric sensing and tilt sensing 30 seconds after the upper tail door closes again.

NOTE:

If the security systems detects a fault with the volumetric sensor it will indicate this by emitting 2 error tones from the alarm siren when the vehicle is unlocked and disarmed.

EMERGENCY DISARMING

If the alarm has been triggered and cannot be disarmed with the smart key, it can be disarmed with the ignition switch as follows:

1. Unlock the left-hand front door using the emergency key blade.
2. Authenticate the Land Rover smart key by holding the smart key adjacent/over the immobilizer antenna unit, located on the central fascia.
3. Press the Start/Stop button to authenticate the Land Rover smart key.
4. The alarm will be disarmed.

NOTE:

When the left-hand front door is unlocked and opened using the emergency key, the alarm will sound until the Land Rover Smart Key is authenticated.

DEACTIVATING THE ALARM WHEN TRIGGERED

If the alarm has been triggered, it can be deactivated by any one of the following methods

Pressing the unlock button on the Land Rover smart key.

- Pressing the START/STOP button with a valid Land Rover smart key present.
- Authenticating the Land Rover smart key via the immobilizer antenna unit.

CONTROL DIAGRAM

NOTE:

A = Hardwired connection; O = LIN bus

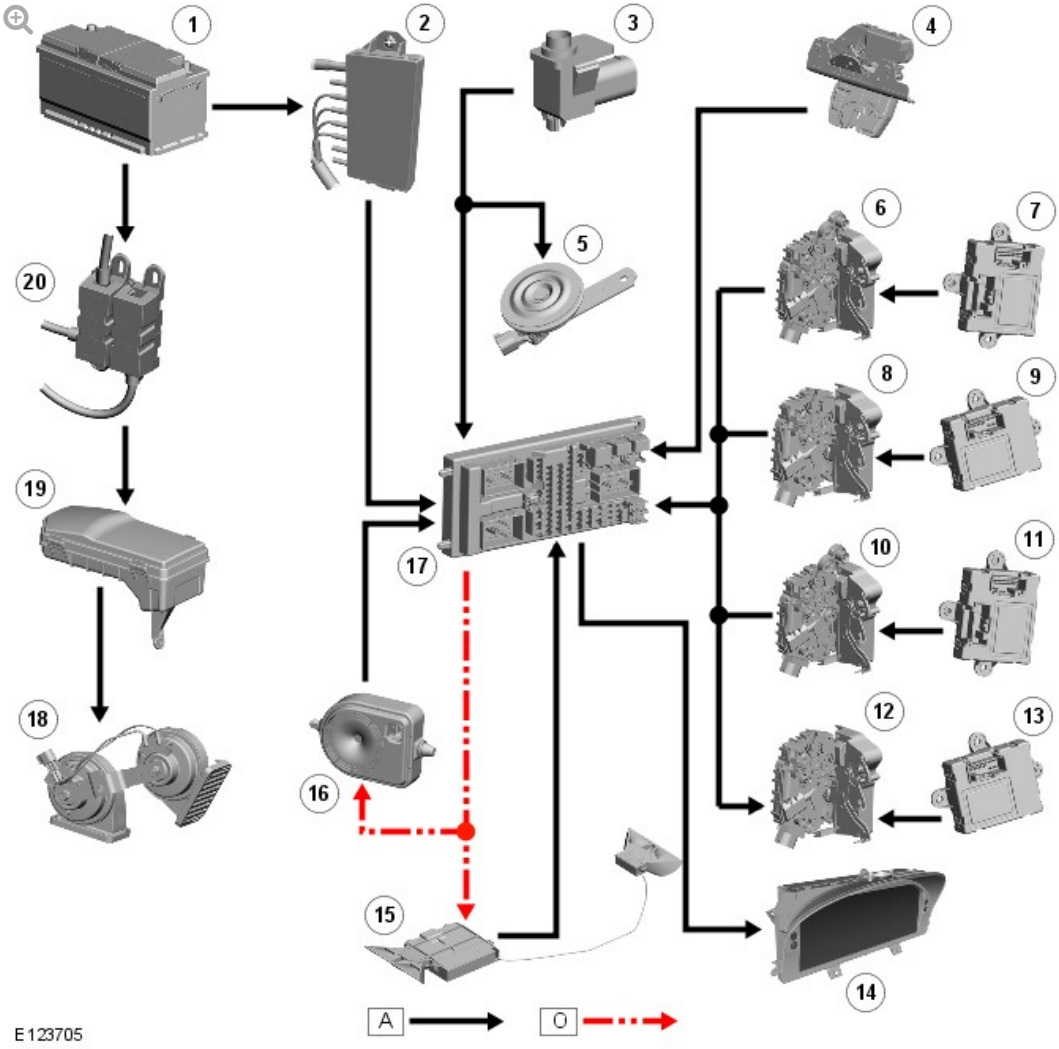

ITEM	DESCRIPTION
1	Battery
2	BJB (battery junction box)
3	Hood ajar switch
4	Upper tailgate ajar switch (integrated into latch)
5	Passive sounder (if fitted)
6	right-hand (RH) rear door latch
7	RH rear door module
8	left-hand (LH) rear door latch

9	LH rear door module
10	Driver door latch
11	Driver door module
12	Passenger door latch
13	Passenger door module
14	Instrument cluster
15	Volumetric sensor (if fitted)
16	BBUS/Tilt sensor
17	CJB
18	Horns
19	EJB (engine junction box)

2012.0 RANGE ROVER (LM), 419-01

ANTI-THEFT - ACTIVE

HOOD SWITCH (G928156)

86.77.20	SWITCH - HOOD - ALARM SYSTEM - RENEW	ALL DERIVATIVES	0.1	USED WITHINS	+

REMOVAL

1. 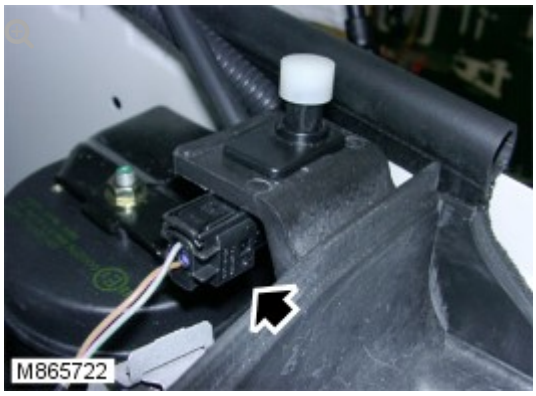

   Disconnect the hood switch electrical connector.

2. Remove the hood switch from the plenum chamber support.

INSTALLATION

1. Install the hood switch to the plenum chamber support.

2. Connect the hood switch electrical connector.

2012.0 RANGE ROVER (LM), 419-01

ANTI-THEFT – ACTIVE

INCLINATION SENSOR (G909262)

REMOVAL AND INSTALLATION

REMOVAL

1. Remove the generic electronic module (GEM).
   For additional information, refer to: Generic Electronic Module (GEM) (419-10, Removal and Installation).

2. 

Remove the inclination sensor.

- Disconnect the electrical connector.

INSTALLATION

1. Install the inclination sensor.
   - Connect the electrical connector.
2. Install the GEM.
   For additional information, refer to: Generic Electronic Module (GEM) (419-10, Removal and Installation).
3. Using the Land Rover approved diagnostic equipment, follow the on-screen instructions and configure the inclination sensor.

2012.0 RANGE ROVER (LM), 419-01

ANTI-THEFT - ACTIVE

INTRUSION SENSOR (G916062)

REMOVAL AND INSTALLATION

REMOVAL

1. 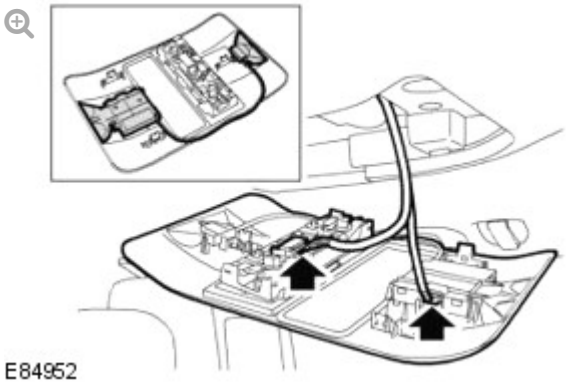

   Remove the center overhead console.

   - Carefully release the 3 clips.
   - Disconnect the 3 electrical connectors.

2. Remove the intrusion sensor and module from the center overhead console.

   - Release from the 2 clips.

INSTALLATION

1. Install the intrusion sensor and module to the center overhead console.
   - Secure in the 2 clips.
2. Install the center overhead console.
   - Connect the electrical connectors.
   - Secure the clips.

2012.0 RANGE ROVER (LM), 419-01

ANTI-THEFT – PASSIVE

DESCRIPTION AND OPERATION

COMPONENT LOCATIONS

NOTE:

RHD installation shown, LHD installation similar

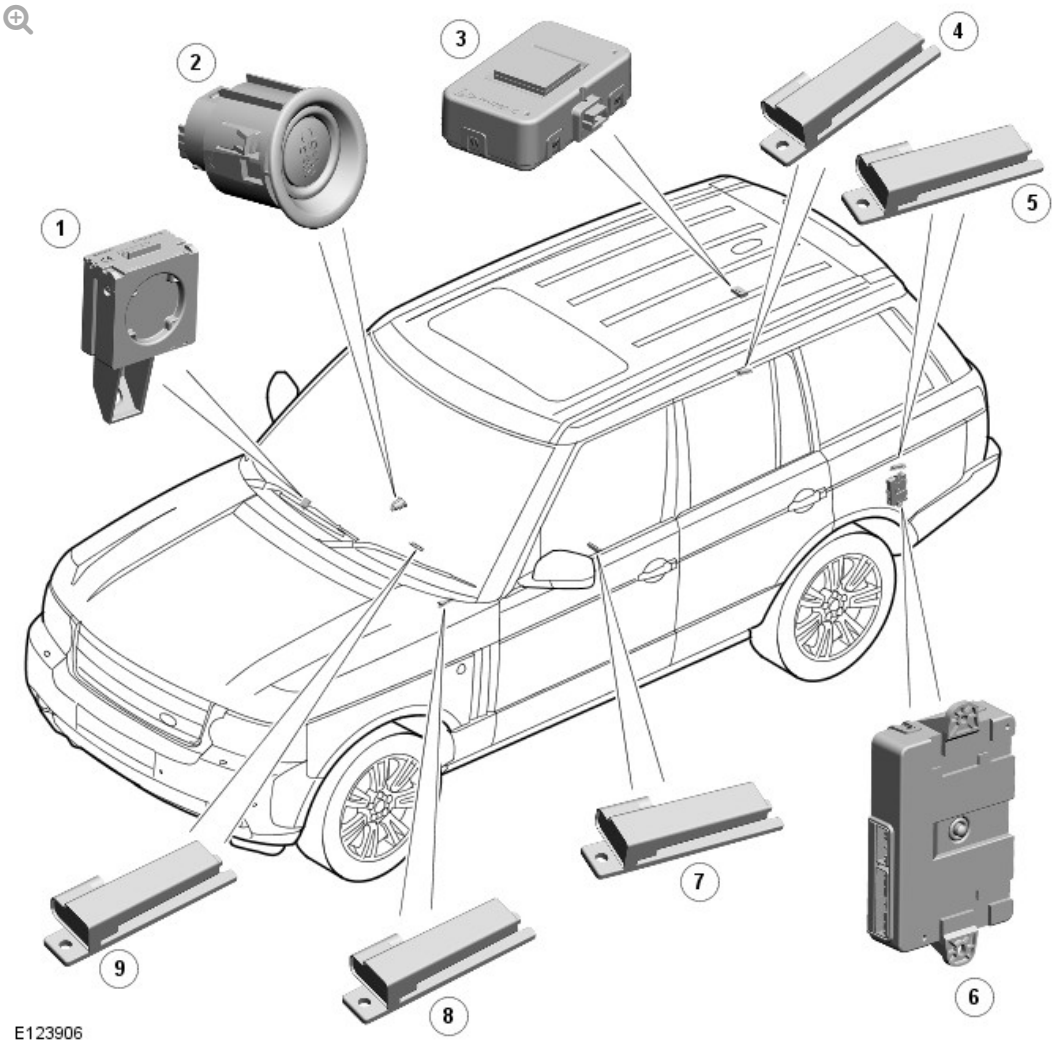

ITEM	DESCRIPTION
1	Immobilizer Antenna Unit (IAU)
2	Stop/Start switch
3	Radio Frequency (RF) receiver
4	Interior Antenna RH (right-hand) luggage compartment
5	Interior Antenna LH (left-hand) luggage compartment

5	Interior Antenna LH (left-hand) luggage compartment
6	Keyless Vehicle Module (KVM)
7	Interior antenna - rear compartment
8	Interior antenna - front compartment
9	Interior antenna - front compartment

OVERVIEW

The passive anti-theft system provides a secure interface between the CJB (central junction box) and the ECM (engine control module), to prevent unauthorized starting of the vehicle. Unauthorized starting prevention is achieved by immobilization of the engine crank system and the fuel system.

The passive anti-theft system is a function of the 'Passive Start' system. The system uses the following components:

- Smart key
- Low Frequency (LF) antennas (5 off)
- Radio Frequency (RF) receiver
- Keyless Vehicle Module (KVM)
- Immobilizer Antenna Unit (IAU)
- CJB
- ECM.

The system is automatic and requires no input from the driver other than to press the brake pedal and the start/stop button. The engine management system will only allow engine crank and fuelling when an authorization data message is received from the CJB.

Engine starting is prevented by inhibiting the fuel, engine (spark, injectors and crank) and ignition systems from operating. This is achieved by using a uniquely coded Smart Key and an encoded data exchange between multiple control modules.

The engine start system is initiated when the encoded data between the Smart Key and KVM and CJB and ECM is verified. The engine can then be

Smart Key and KVM and CJB and ECM is verified. The engine can then be started when the drive selector is in the 'Park' position, and the start/stop button and the brake pedal are pressed simultaneously.

SYSTEM OPERATION

PASSIVE START SYSTEM

At the request of the CJB, the KVM prompts each of the LF antennas to output a signal. When the Smart Key is in the vehicle cabin, it detects the LF signals and responds with a RF data-identification signal back to the KVM via the RF receiver.

If the data received matches that stored in the KVM it continues the passive start process by communicating a 'Smart Key valid' signal to the CJB via the medium speed CAN (controller area network) bus.

Once the CJB receives the authorization and confirms the response with an internal calculation, it passes coded data to the ECM on the high speed CAN bus. Upon confirmation from the ECM the ignition is enabled.

Before the CJB sends a mobilization signal to the ECM it will exchange encrypted data with the electric steering lock and the instrument cluster to authorize unlocking of the steering column. The instrument cluster only provides a ground for the steering lock motor.

The CJB will enable the fuel pump relay which, on diesel vehicles operates the fuel pump and on gasoline vehicles sends a battery voltage supply to the FPDM (fuel pump driver module) to operate the fuel pump in conjunction with the ECM.

If the transmission selector is in the park position and the driver presses the brake pedal and simultaneously presses the start/stop button, the CJB interprets this as an engine crank request. Before the engine crank request is allowed, the CJB compares a brake pressure signal received from the ABS (anti-lock brake system) module. If the signal is greater than the stored threshold value, a crank request signal is sent to the ECM on the high speed CAN bus.

NOTE:

NOTE:

If the KVM fails to locate the Smart Key, a message 'SMART KEY NOT FOUND REFER TO HANDBOOK' will appear in the instrument cluster message center and the keyless start back-up process will have to be used to mobilize and start the vehicle.

KEYLESS START BACK-UP

If the vehicle has been unlocked using the emergency key blade or the Smart Key is not detected by the vehicle, it will be necessary to use the keyless start back-up system to disarm the alarm and start the engine. The following process must be followed in this event:

- Position the Smart Key against the underside of the instrument panel, on the outboard side of the steering column, with the buttons facing downwards. This is the location of the IAU.
- Holding the Smart Key in position and with the brake pedal depressed, press the start/stop button to start the engine.

Position of Smart Key on instrument panel.

NOTE:

LHD (left-hand drive) shown RHD (right-hand drive) similar.

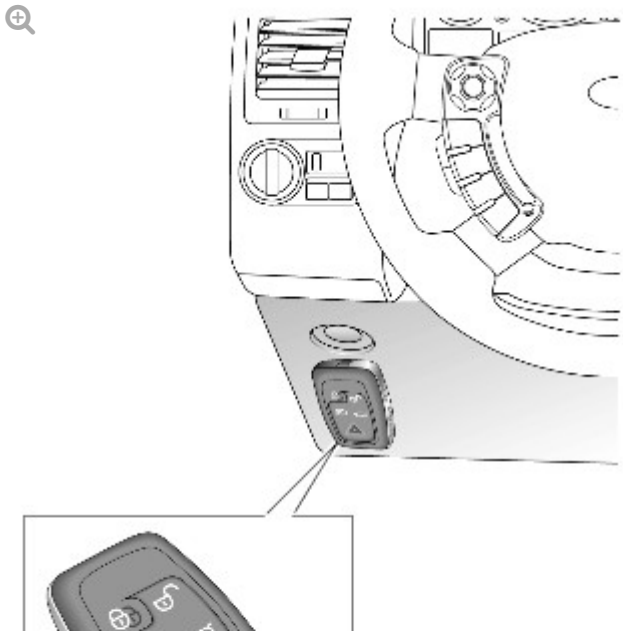

E125169

This process bypasses the data exchange between the KVM and the CJB. A transponder within the Smart Key is detected by the IAU. The IAU confirms the code output from the transponder and communicates this code confirmation with the CJB via a LIN (local interconnect network) bus connection. The CJB then initiates the vehicle start process in the normal manner.

COMPONENT DESCRIPTION

IMMOBILIZER ANTENNA UNIT (IAU)

NOTE:

RHD shown LHD similar.

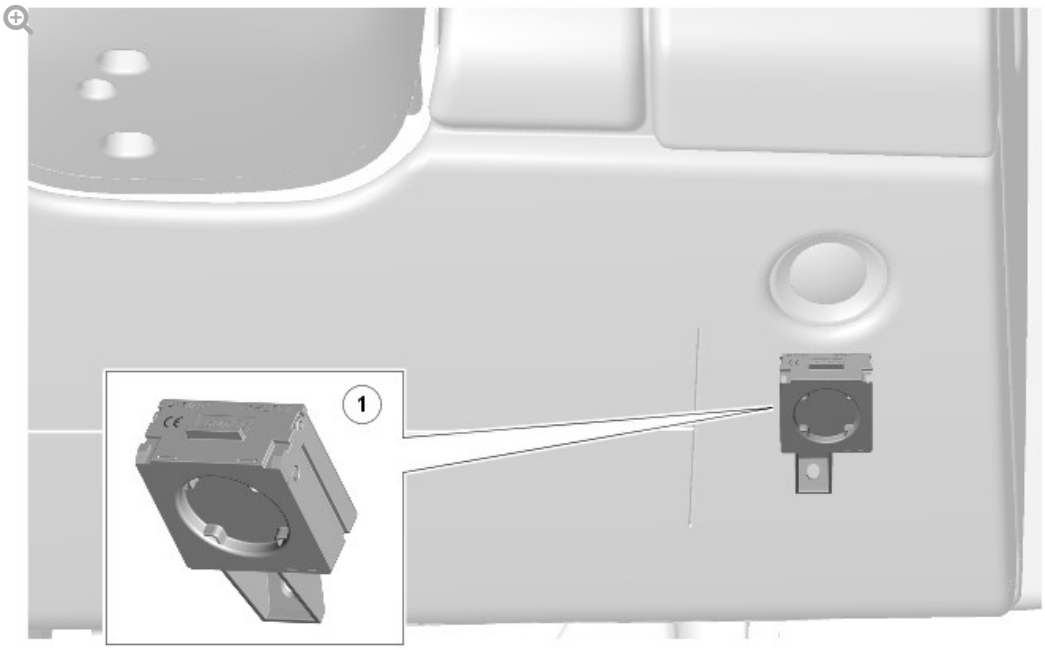

E118009

ITEM	DESCRIPTION

1	IAU

The IAU is located on the underside of the instrument panel, outboard of the steering column, below the footwell lamp. The IAU cannot be seen as it is located behind the trim panel. The IAU is used if the KVM is unable to authorize the Smart Key. The driver will be alerted to this by a chime and a message in the instrument cluster message center 'SMART KEY NOT FOUND REFER TO HANDBOOK'.

If the KVM is unable to identify the Smart Key, for example if the Smart Key battery voltage is low or there is local RF interference, the transponder within the Smart Key can be read by holding the smart key against then instrument panel in the position shown in the illustration.

LOW FREQUENCY (LF) ANTENNAS

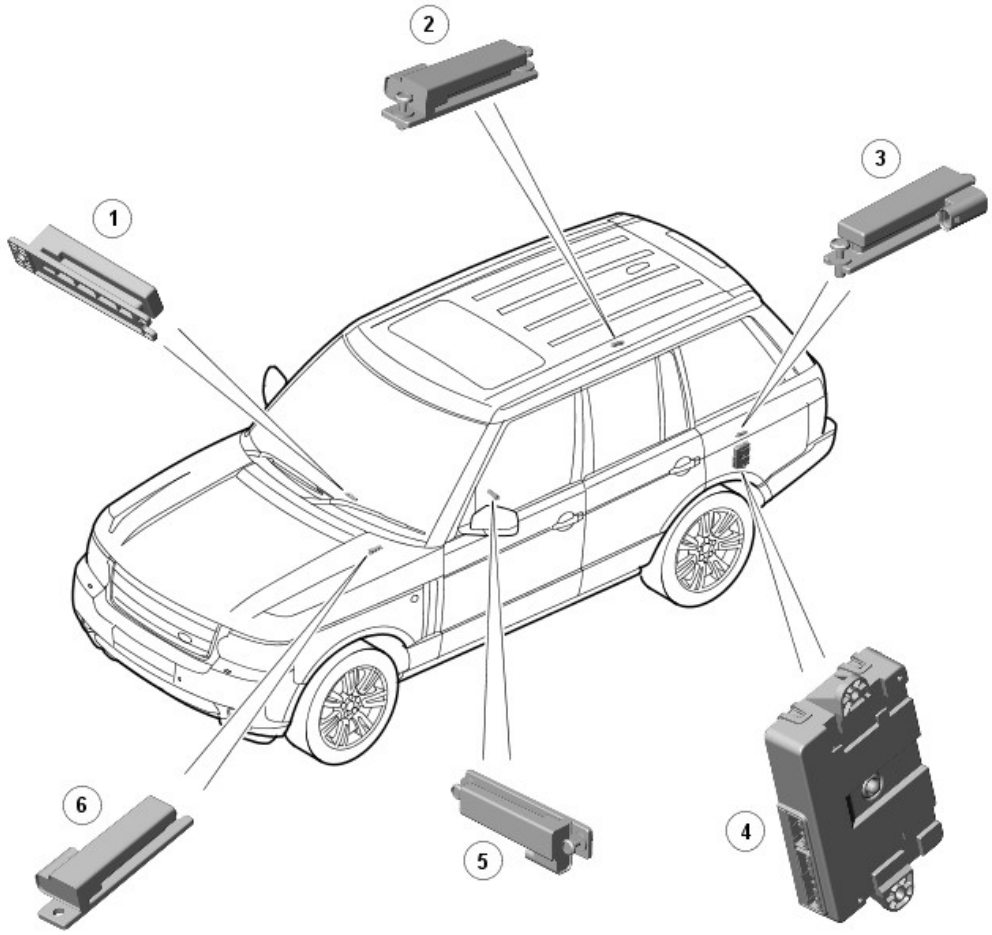

E117996

ITEM	DESCRIPTION

1	Interior antenna - front compartment
2	Interior antenna RH - luggage compartment
3	Interior antenna LH - luggage compartment
4	Keyless Vehicle Module (KVM)
5	Interior antenna - rear compartment
6	Interior antenna - front compartment

Five Low Frequency (LF) antennas for the passive start system are positioned in specific locations within the vehicle.

The KVM transmits an LF signal via the antennas which is received by the Smart Key. The Smart Key then responds by transmitting a RF signal which is received by the RF receiver and passed to the KVM for authorization.

KEYLESS VEHICLE MODULE (KVM)

The KVM is located in the LH side of the luggage compartment, behind the trim panel and receives a power supply from the CJB. A serial communication line from the KVM to the RF receiver (which is located behind the headlining, rearward of the sunroof), transmits coded data from the Smart Key to the KVM for vehicle locking and unlocking using the Smart Key buttons.

The KVM controls LF signal transmissions to and from the Smart Key and provides authorization to allow the vehicle to be started. The module has a medium speed CAN bus connection to the CJB for authorizing vehicle starting.

CONTROL DIAGRAM

NOTE:

A = Hardwired; **D** = High speed CAN bus; **F** = RF transmission; **N** = Medium speed CAN bus; **O** = LIN bus; **AH** = Serial communication line

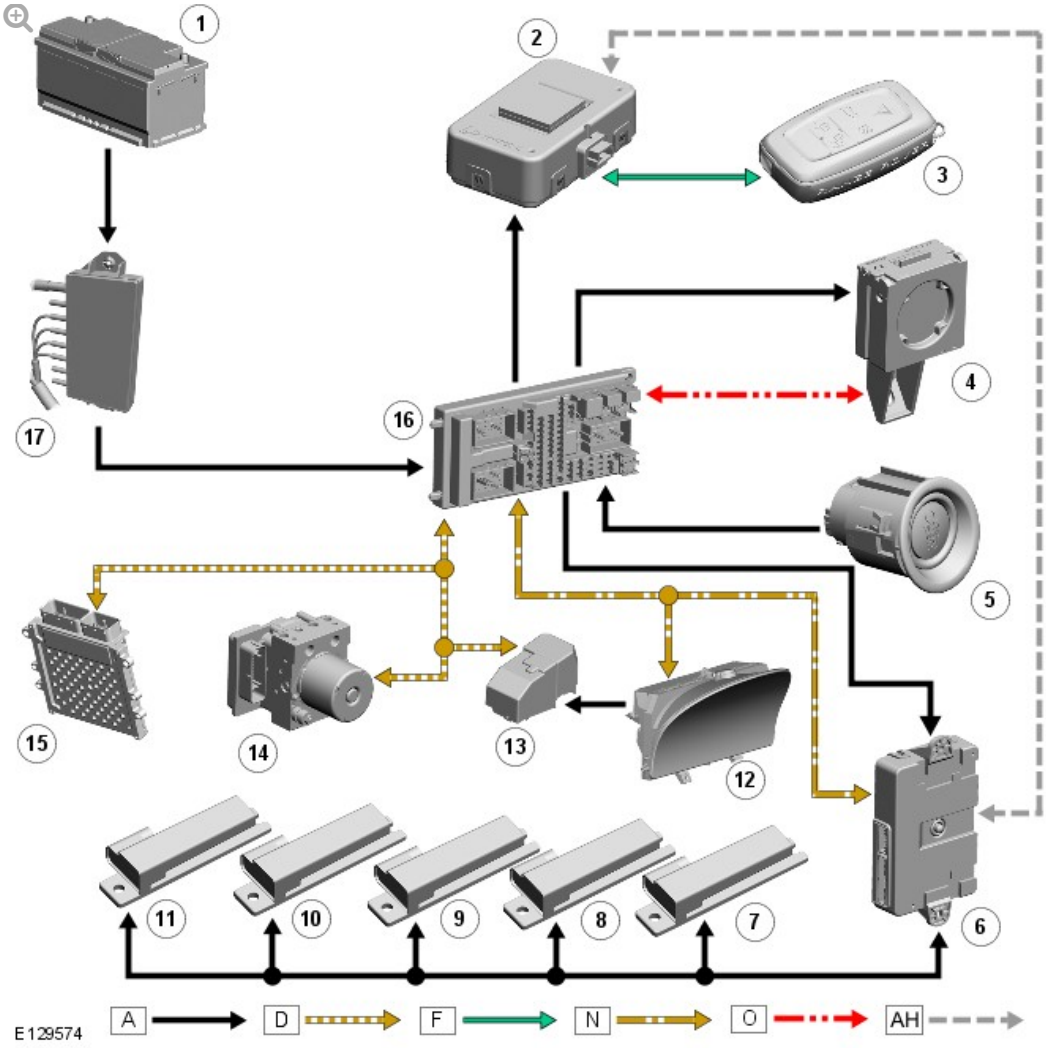

ITEM	DESCRIPTION
1	Battery
2	RF receiver
3	Smart Key
4	IAU
5	Stop/Start switch
6	KVM
7	Interior antenna
8	Interior antenna
9	Interior antenna
10	Interior antenna
11	Interior antenna
12	Instrument cluster

13	Electric steering column lock
14	ABS module
15	ECM
16	CJB
17	BJB (battery junction box)

PASSIVE ANTI-THEFT SYSTEM (PATS) MODULE

(G1652216)

REMOVAL AND INSTALLATION

REMOVAL

NOTE:

Removal steps in this procedure may contain installation details.

1. Disconnect the battery ground cable.
   Refer to: Specifications - Armoured (414-00 Battery and Charging System - General Information, Specifications).

2.

3.

4. **CAUTION:**

   Cover fibre optic cable connectors to minimise dust ingress and avoid bending the cables in a radius of less than 30mm.

   Torque: **10 Nm**

5. **CAUTION:**

   Take extra care when removing the component.

6.

INSTALLATION

1. To install reverse the removal sequence.

2. Using the Land Rover approved diagnostic system, configure the module.

2012.0 RANGE ROVER (LM), 419-07

NAVIGATION SYSTEM

DESCRIPTION AND OPERATION

Component Location

ITEM	DESCRIPTION
1	Touch Screen Display (TSD)
2	Instrument cluster
3	VICS beacon antenna (Japan only)
4	Microphone - Voice recognition
5	LH steering wheel switches
6	Clockspring
7	RH steering wheel switches
8	Roof pod (GPS (global positioning system) antenna)
9	Traffic Message Channel (TMC) tuner or VICS receiver (Japan Only)
10	Power amplifier
11	Navigation update socket
12	CJB (central junction box)

OVERVIEW

The navigation system provides audible and visual route guidance information to enable the driver to reach a desired destination. The system allows the driver to choose the desired route using minor or major roads or highways with the option of three routes. Directions to hospitals, museums, monuments and hotels are also available. Map information stored on a hard drive located within the TSD (touch screen display) is used to determine the best route for the journey and provide the driver with details of directions and approaching junctions.

If the vehicle requires a map upgrade or a new region loading an enabling code along with the map data must be purchased. Map upgrades to the hard drive unit need to be carried out by a Land Rover dealer using Land Rover approved diagnostic equipment.

TRAFFIC MESSAGE CHANNEL (TMC)

The Traffic Message Channel (TMC) traffic data is currently broadcast in many European countries.

TMC is a function of the FM (frequency modulation) Radio Data System (RDS). The system broadcasts real-time traffic and weather information. TMC information is received via the normal FM radio antenna.

The TMC (Traffic Message Channel) is a function of the FM RDS (Radio Data System). The system broadcasts real-time traffic and weather information. Data messages are received and decoded by the TSD (touch screen display) and passed onto the navigation system advising the driver of any evasive action required during the journey.

TMC traffic information systems conform to a global standard that has been adopted by:

- traffic data gatherers
- Information service providers

- Broadcasters
- Vehicle/receiver manufacturers

All TMC receivers use the same list of event codes, while the location database (on the map disc) contains both a country-specific set of location codes for the strategic European road network.

VEHICLE INFORMATION AND COMMUNICATION SYSTEM (VICS)

The Vehicle Information and Communication System (VICS) is broadcast in the Japanese market.

The VICS system supplies the navigation computer with information that enables the computer to inform the vehicle driver of traffic conditions in the vehicle's vicinity and calculate an alternative route if necessary. Information is transmitted to the navigation system through three routes:

-

RADIO FREQUENCY TRANSMISSION

Radio frequency transmission is generally transmitted from road side beacons mainly on highways. The information transmitted is:

- Traffic congestion
- Travel time to next intersection
- Traffic conditions in surrounding areas and highway junctions
- Traffic accidents
- Speed limits
- Lane regulations
- Tire change
- Parking availability at highway service areas and parking areas.

INFRA-RED TRANSMISSION

Infra-red transmission is received by the beacon antenna mounted on the top of the instrument panel. Infra-red transmissions are transmitted from

road side beacons on major trunk roads. The information transmitted is:

- Traffic congestion and travel time
- Traffic accidents
- Breakdowns
- Road works restrictions
- Parking availability.

FM (FREQUENCY MODULATION) TRANSMISSIONS

FM (frequency modulation) transmissions are received via the FM antenna, broadcast as part of the normal RDS FM transmission. The information transmitted is:

- Traffic congestion and travel time for wide areas
- Traffic accidents, road works, speed limits and lane restrictions for a wide area
- Parking availability information.

CONTROL DIAGRAM

NOTE:

A = Hardwired; N = Medium speed CAN bus; O = LIN bus; P = MOST; AF = Firewire

ITEM	DESCRIPTION
1	Navigation update socket
2	Roof pod antenna
3	VICS antenna (Japan Only)
4	Traffic Message Channel (TMC) tuner or VICS receiver (Japan Only)
5	TSD (touch screen display)

5	TSD (touch screen display)
6	Microphone - Voice recognition
7	CJB (central junction box)
8	Clockspring
9	RH steering wheel switches
10	LH steering wheel switches
11	Power amplifier
12	IHU (integrated head unit)
13	Instrument cluster

PRINCIPLES OF OPERATION

The system used to calculate the current position of the vehicle is called the Global Positioning System (GPS). Satellites transmit radio signals to provide information about the satellite's position, for example the latitude, longitude, altitude, almanac data and an accurate time signal generated by an on-board atomic clock. Each satellite contains four atomic clocks.

The vehicle needs to receive data from at least four different satellites to give a three dimensional fix on its current position.

As the vehicle moves, this information is continually being updated. The TSD determines which satellites are 'visible' to the system and their current position and relationship to each other. Using this information the TSD can account for positional deviations of the satellites and compensate to enhance the accuracy of the navigation system.

The Global Positioning System (GPS) signal is also known as the Precision Positioning Signal (PPS).

PPS predictable accuracy is:

- 22 meters horizontal accuracy
- 27.7 meters vertical accuracy
- 200 nanoseconds time accuracy.

The navigation system receives GPS information via the GPS antenna. The

The navigation system receives GPS information via the GPS antenna. The GPS signals are used by the TSD to calculate the vehicles position. Once the driver has entered a destination, the TSD can calculate a route, based on the driver's pre-determined preferences or the default settings in the TSD.

The navigation system receives GPS (global positioning system) information via the GPS antenna. The GPS signals are used by the TSD to calculate the vehicles position. Once the driver has input a desired destination the TSD can calculate a route, based on the drivers pre-determined preferences or the default settings in the TSD.

The navigation system is accessed by pressing the navigation soft key on the touch screen display.

Navigation is initiated by the driver entering a destination. This can be achieved by:

-
- Entering in an address using the touch screen display.
- Entering a post code.
- Choosing a previous destination
- Choosing a point of interest from the hard drive database.
- Choosing the home location
- Choosing a memory stored location.

The driver is then guided to the destination by a scrolling map display and voice guidance. The display can be varied by scale and display type.

In addition to the navigation system there are two market dependant systems that supply extra information to the navigation system and the driver. These are:

- Traffic Message Channel (TMC) – Europe only.
- Vehicle Information and Communication System (VICS) - Japan only.

NAVIGATION SYSTEM COMPONENTS

TOUCH SCREEN DISPLAY (TSD)

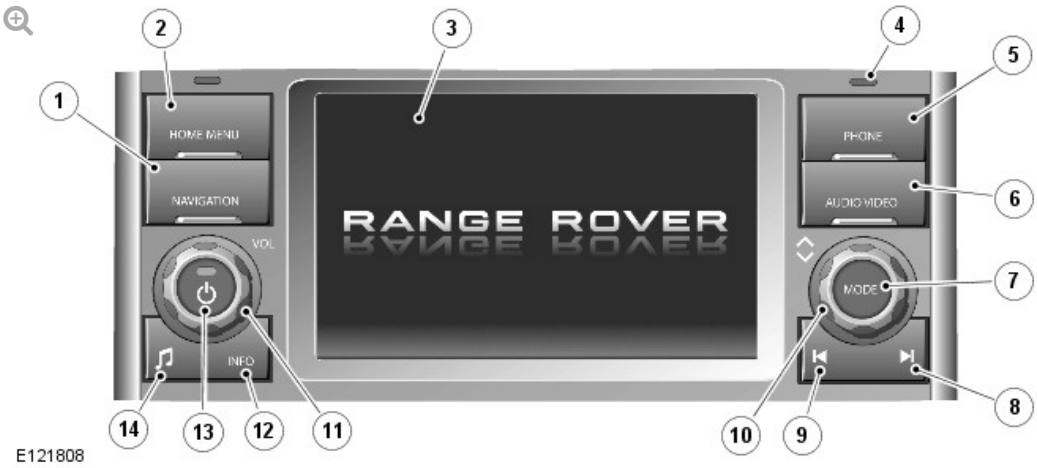

ITEM	DESCRIPTION
1	Navigation
2	Home menu
3	Touch screen display
4	Light sensor
5	Telephone
6	Audio/Video
7	Search up/increase
8	Mode
9	Search down/decrease
10	Scroll up/down
11	Volume
12	Information
13	Audio on/off
14	Tone

The Touch Screen Display (TSD) is located in the center of the instrument panel and is the driver control interface for the navigation system. The TSD is connected to the MOST ring and communicates with the other components in the audio/infotainment system.

The TSD also provides driver display and control of the audio system, telephone, the proximity cameras, the Venture Cam, the Traffic Message Channel, the rear seat entertainment, the timed climate control and the alarm system valet mode.

The TSD is a seven inch touch sensitive, 1280 X 480 pixels LCD (liquid crystal display) VGA screen.

MICROPHONE

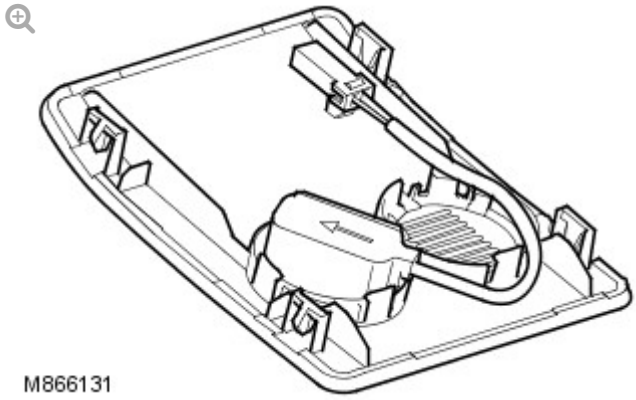

The microphone is located in the front interior lamp console. The standard, directional type microphone is connected to the Integrated Head Unit (IHU) for voice recognition of the navigation system and the telephone. The microphone has an integrated noise suppression system for hands-free telephone use.

TMC ANTENNA AMPLIFIER

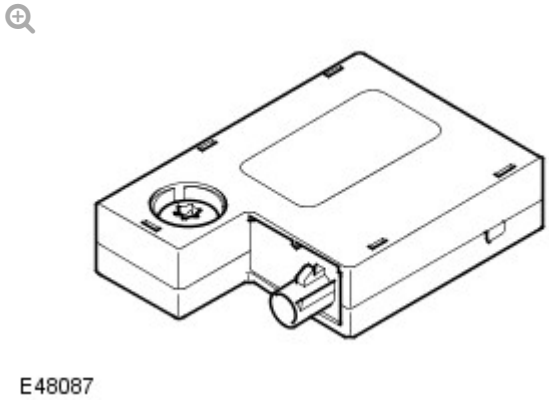

The TMC antenna amplifier is located in the upper tail door, adjacent to the center high mounted stop lamp. The amplifier is connected to the FM (frequency modulation) antenna which is integral with the rear screen.

ROOF MOUNTED ANTENNA POD

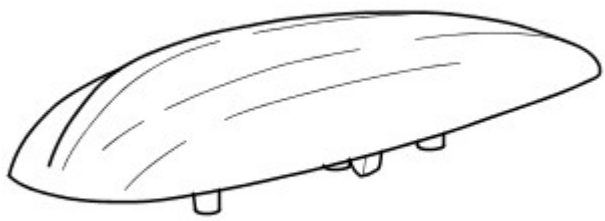

E120935

The roof mounted pod contains several antennas:

- GPS antenna
- SDARS antenna (NAS only).
- DAB antenna (band-L)

The roof mounted pod is a standard fit on all vehicles.

VICS BEACON ANTENNA (JAPAN ONLY)

E48091

The VICS beacon is located on top of the instrument panel on the right hand side. The beacon is located in an additional base attached to the top of the instrument panel and secured with a self adhesive pad. The beacon is connected to the touch screen display (TSD) via a screened co-axial cable.

VICS ANTENNA AMPLIFIER (JAPAN ONLY)

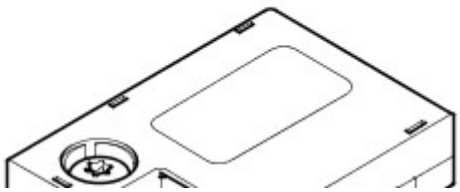

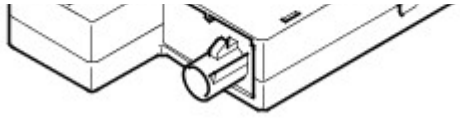

E48087

The VICS antenna amplifier is located in the upper tail door, below the center high mounted stop lamp. The amplifier is connected to the VICS receiver via a screened co-axial cable.

NAVIGATION SYSTEM DIAGNOSTICS

The TSD has an on-board diagnostics capability to allow the functionality of the following to be tested:

- Hard Key Test
- Touch screen test
- DTC information
- Vehicle configuration
- Configuration
- Vehicle signals
- Video inputs
- Self test
- Color Bar
- Software loading
-
- HDD (hard disc drive) information
- Vehicle information
- Microphone
- Voice output check

Use the following procedure to access to the diagnostic screens.

- Place vehicle into power mode 6

- Press the 'HOME' physical button
- In a central position at the top of the TSD, press the screen and hold for more than 5 seconds
- In the top LH corner of the TSD, press the screen and hold for more than 5 seconds, A 'Diag PIN Entry' entry box will appear.
- Enter the diagnostic PIN entry code of '753' and press the 'OK' virtual icon on the TSD. An 'On-Screen Diagnostics' menu screen will appear.

There are two diagnostic menu screens.

Diagnostic menu one contains the following options:

- Hard Key Test
- Touch screen test
- DTC information
- Vehicle configuration
- Configuration
- Vehicle signals
- Video inputs
- Self test

Diagnostic menu 2 contains the following options:

- Color Bar
- Software loading
-
- HDD (hard disc drive) information
- Vehicle information
- Microphone
- Voice output check

HARD KEY TEST

The hard key test is a function that allows all the TSD physical buttons to be tested whilst being displayed in the TSD.

TOUCH SCREEN TEST

The touch screen test function allows the TSD virtual keys to be tested and calibrated, when the touch screen test function is selected the user is given two options 'Screen Calibration and 'Touch Screen Test'.

DTC INFORMATION

The DTC information function will perform a 'SELF CHECK' an internal diagnostic routine and display any DTC (diagnostic trouble codes) found.

VEHICLE CONFIGURATIONS

The vehicle configuration function allow the user to view the vehicle configurations.

CONFIGURATIONS

The configuration function shows the TSD configurations.

VEHICLE SIGNALS

The vehicle signals function allows the user to view vehicle senor signals and voltages.

VIDEO INPUTS

The video inputs function allows the user to set the TSD formats for the companion camera, rear view/proximity cameras and the TV and DVD.

COLOR BAR

The Color bar function allows the user to view the TSD Color bars.

LOADING

The Loading function is used for uploading navigation software via the navigation update socket.

HDD INFORMATION

The HDD function allows the user to view the hard drive serial number, operation time and model information. There is also a smart check function withing the HDD information.

VEHICLE INFORMATION

The vehicle information function allows the user to view vehicle configurations, GPS information and vehicle sensors. Japanese vehicles will

also have a VICS option which will allow the user to look at the radio wave and infrared beacon signals along with the FM multi signal.

MICROPHONE

The microphone function allows the user to test the microphone input level.

VOICE OUTPUT CHECK

The voice output check allows the user to test the output level when voice recognition is activated.

VOICE RECOGNITION

The voice recognition system controls the following systems (where fitted):

- Telephone
- Notepad
- Navigation.

The voice recognition software is contained in the Touch Screen Display (TSD). The microphone is hardwired to the TSD for voice control and the IHU for telephone. The TSD will allow voice control of the telephone system, the Notepad and the navigation system. The TSD has limited language capability with German, French, Italian, Spanish, Dutch, USA and UK supported.

The voice recognition system enables the driver to activate functions of the system without operating controls manually. This allows the driver to concentrate on driving the vehicle, improving safety. When the driver speaks one of the defined voice commands, with the voice recognition system active, the voice recognition software converts the command into a control signal for the system.

The Notepad function allows the driver to record notes of up to 30 seconds in length.

VOICE CONTROL ACTIVATION

The voice control system is controlled and activated using the Voice button located on the RH (right-hand) steering wheel switch module. Press the switch once briefly to start a voice session and press and hold to cancel a voice session.

When a voice session is started, a tone will be emitted to indicate the system is waiting for a voice command from the driver.

Once a spoken command has been given, the system will repeat the command as understood by the system as confirmation. The command will be then be performed by the relevant system or the system will ask for further clarification of the command. Always wait until after the tone is heard before giving any further commands.

If a command is not understood by the system, it will respond with the response "Sorry". The driver then has two further attempts to give the command. If the system still does not understand the command, the voice session is cancelled.

Briefly pressing the Voice button during a voice session will interrupt the audible feedback. Wait for the tone to sound before giving the next command.

A command can be cancelled by the driver giving the command "Cancel" or by pressing and holding the voice button.

A double tone indicates the voice session has been cancelled.

Refer to the Owners Handbook for details of command lists and voice control of the telephone, notepad and navigation systems.

4X4 INFORMATION

SYSTEM FUNCTIONS

The 4X4 information system uses data from other systems to obtain the displayed information. The data is received from the CAN (controller area network).

STEERING ANGLE

ITEM	DESCRIPTION
1	Steering in left hand turn
2	Steering in straight ahead
3	Steering in right hand turn

The steering angle is obtained from information broadcast by the steering angle sensor on the CAN (controller area network) . The sensor signal is used to display the orientation of the steered wheels in relation to a plan view of the chassis layout. The steering angle is displayed by one of thirteen graphics to show the full range of steering angle from lock to lock in increments of 5 degrees from the straight ahead position.

TRANSFER CASE

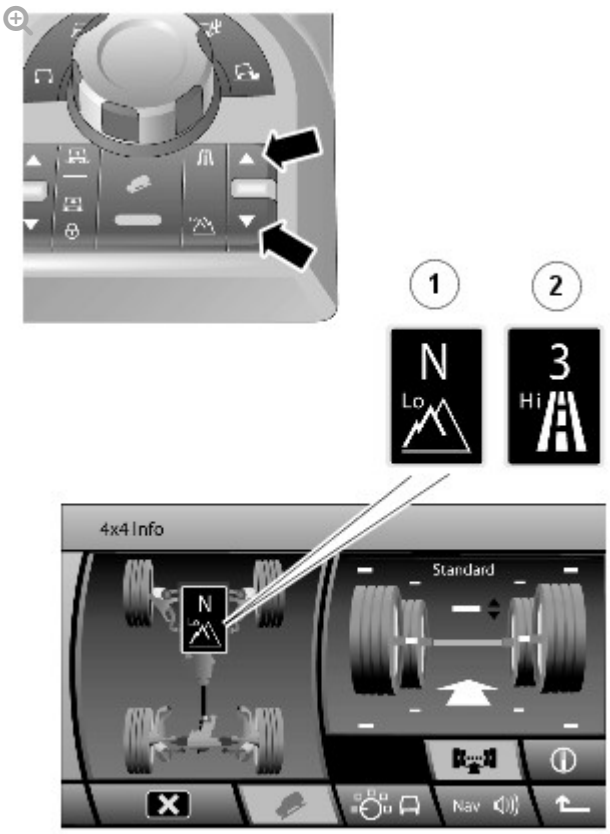

E121483

ITEM	DESCRIPTION
1	Low Range selected

1	Low Range selected
2	High Range selected

The transfer case currently active setting is obtained from information broadcast by the transfer case control module on the CAN (controller area network) . The display can show low range, high range or neutral selection. The selected range icon flashes if a ratio change is in progress.

When neutral is selected, the display shows an 'N'. If the transfer case is in neutral but the automatic transmission is not in neutral, the selected gear on the transmission flashes until neutral is selected on the selector lever.

HILL DESCENT CONTROL (HDC)

The HDC system current operating condition is obtained from information broadcast by the ABS (anti-lock brake system) control module on the CAN (controller area network) . The display can show HDC functionality states with the HDC icon illuminated in a green or amber color. If HDC is not selected, no HDC icon is displayed. For additional information refer to the Anti-Lock Control - Traction Control section.

AUTOMATIC TRANSMISSION

The automatic transmission current selected gear is received from a CAN (controller area network) transmission from the transmission control module. The display shows the current selector lever position of P, R, N, D, 1, 2, 3, 4, 5 or 6. The gear position is displayed in a central position above the transfer case range icon.

AIR SUSPENSION

The air suspension status information is obtained from information broadcast on the CAN (controller area network) by the air suspension control module. The display comprises six different screen displays to show all air suspension height states and transition states. During a height change the arrow head between the wheels flashes. The green line denotes the suspension position above, below or at the standard height setting. The

suspension position above, below or at the standard height setting. The selected height is confirmed by a symbol and text confirming the suspension status.

WHEEL HEIGHT

ITEM	DESCRIPTION
1	Maximum wheel travel upwards
2	Maximum wheel travel downwards

The wheel height status information is obtained from information broadcast on the CAN (controller area network) by the air suspension control module. The wheel heights are measured by the four individual height sensors and processed by the air suspension control module.

The position of each wheel relative to the vehicle body is displayed. Upper and lower wheel travel markers are shown as white lines above and below each wheel. The positions of the wheel markers move according the air suspension height selected. When the suspension is at off-road height, the position of the travel markers move upwards to represent the 55 mm of vehicle body movement when in this mode. When the suspension is at access height, the position of the travel markers move downwards to represent the 50 mm of vehicle body movement when in this mode. When the suspension is in off-road or access height, the positions of the suspension and wheel travel markers are displayed as blue lines to show their relative positions in standard height mode.

When the maximum wheel travel is reached, the travel marker changes to an amber color and flashes for as long as the maximum travel condition exists.

COMPASS

The compass information is obtained from the navigation computer. The compass view is the same compass view which is also displayed when the navigation system is in off-road navigation mode. The compass view

navigation system is in off-road navigation mode. The compass view replaces the wheel and body height view in the TSD. Compass view can be accessed by pressing the compass icon on the TSD. Pressing the chassis icon reverts the display back to the chassis view.

The compass view shows a plan view of the vehicle on a compass face. Depending on the compass display mode set in the navigation system, the compass can display a rotating vehicle view which moves to indicate the heading against the fixed compass points. If the heading up mode is selected in the navigation system, the vehicle view pointer will remain fixed vertically and the compass points will rotate to indicate the vehicle heading.

VENTURE CAM

For additional information refer to the Video system.

2012.0 RANGE ROVER (LM), 419-07

NAVIGATION SYSTEM

NAVIGATION SYSTEM

NAVIGATION SYSTEM DIGITAL VERSATILE DISC (DVD) UNIT (G927022)

REMOVAL AND INSTALLATION

REMOVAL

1. **CAUTION:**

   After switching off the ignition, wait for 2 minutes before disconnecting the battery. Failure to wait for 2 minutes will damage the navigation computer.

   Disconnect the battery ground cable.
   For additional information, refer to: Specifications (414-00, Specifications).

2. Remove the access panel from the loadspace trim panel LH.

3. 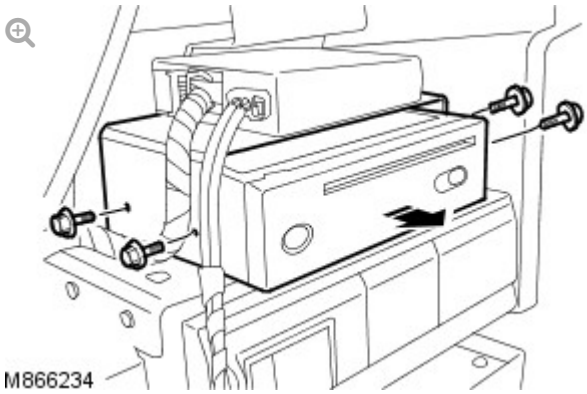

   Release the navigation system digital versatile disc (DVD) unit.

4. 

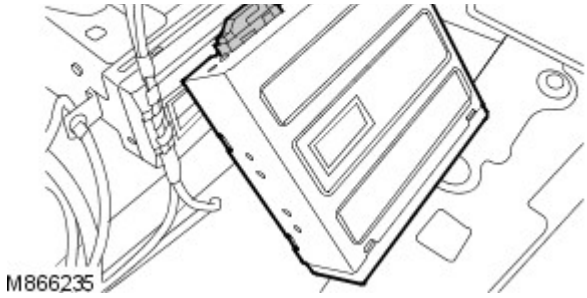

Remove the navigation DVD unit.

- Disconnect the coaxial cable connector.
- Disconnect the 2 electrical connectors.

INSTALLATION

1. Install the navigation DVD unit.
   - Connect the coaxial cable connector.
   - Connect the electrical connectors.
2. Secure the navigation DVD unit.
   - Tighten the bolts to 4 Nm (3 lb.ft).
3. Install the access panel to the loadspace trim panel LH.
4. Connect the battery ground cable.
   For additional information, refer to: Specifications (414-00, Specifications).
5. Using the Land Rover approved diagnostic equipment, follow the on-screen instructions and configure the navigation DVD unit.

NAVIGATION SYSTEM TRAFFIC MODULE (G926957)

REMOVAL AND INSTALLATION

REMOVAL

1. Disconnect the battery ground cable.
   For additional information, refer to: Specifications (414-00

For additional information, refer to: Specifications (414-00, Specifications).

2. Remove the access panel from the loadspace trim panel LH.

3. **CAUTION:**

   Cover fiber optic cable connectors to minimize dust ingress and avoid bending the cables in a radius of less than 30 mm.

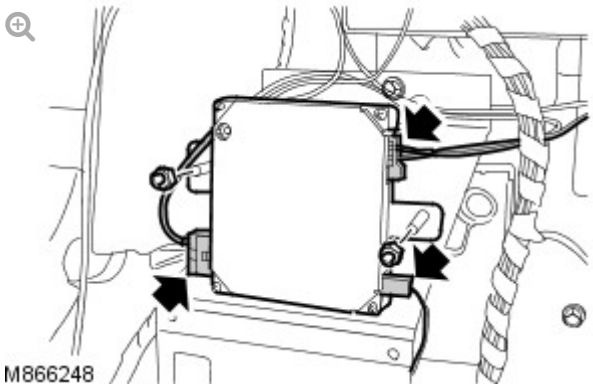

   Disconnect the navigation system traffic module optical connector.

4. Disconnect the navigation system traffic module coaxial cable connector.

5. Disconnect the navigation system traffic module electrical connector.

6. Remove the navigation system traffic module.
   - Remove the 2 nuts.

INSTALLATION

1. Install the navigation system traffic module.
   - Tighten the 2 nuts to 10 Nm (7 lb.ft).

2. Connect the navigation system module optical connector.

3. Connect the navigation system traffic module coaxial cable connector.

4. Connect the navigation system traffic module electrical connector.

5. Install the access panel to the loadspace trim panel LH.

6. Connect the battery ground cable.
   For additional information, refer to: Specifications (414-00, Specifications).

7. Using the Land Rover approved diagnostic system, follow the on-screen instructions and configure the navigation system traffic module.

2012.0 RANGE ROVER (LM), 419-08

CELLULAR PHONE

DESCRIPTION AND OPERATION

TELEPHONE SYSTEM COMPONENT LOCATION

ITEM	DESCRIPTION
1	Integrated Head Unit (IHU)
2	Touch Screen Display (TSD)
3	Microphone
4	Steering wheel switches
5	Audio amplifier
6	Bluetooth phone module

GENERAL

The telephone system fitted to Range Rover uses the MOST ring for communication with the rest of the entertainment and information system.

The system allows the driver to connect their own phone into the integrated phone system using Bluetooth® technology. Bluetooth® technology allowing hands free operation of a Bluetooth mobile phone.

The system comprises:

- Bluetooth phone module
- Touch Screen Display (TSD)
- Microphone
- Integrated Head Unit (IHU)
- Steering wheel controls
- Audio amplifier (for audio output)
- Navigation computer (for voice recognition if fitted).

Compatible Bluetooth® mobile telephones can communicate with the vehicle's in-built telephone system. Connection must be made with the ignition on or the engine running.

SYSTEM COMPONENTS

The following describes the components used in the telephone system.

BLUETOOTH® PHONE MODULE

The Bluetooth® phone module is located in the rear left-hand (LH) side of the luggage compartment, adjacent to the audio amplifier. The module is connected to the MOST ring and, as the interface between the telephone and the IHU, processes all instructions and audio from and to the phone. The module contains voice recognition hardware and software and is used for control of the voice activation system.

TOUCH SCREEN DISPLAY (TSD)

ITEM	DESCRIPTION
1	Navigation button
2	Home menu button
3	Touch screen display
4	Light sensor
5	Telephone button
6	Audio/Video button
7	Search up/increase button
8	Mode button
9	Search down/decrease button
10	Scroll up/down rotary control
11	Volume rotary control
12	Info button
13	Audio on/off button
14	Tone select button

The Touch Screen Display (TSD) forms the basis of the telephone system. It communicates with the rest of the audio/infotainment system on the MOST ring and allows control of the telephone system and other infotainment systems from a single point.

The TSD communicates with the Integrated Head Unit (IHU) on the MOST ring and provides the driver interface and driver display of the telephone system. The TSD also provides driver display and control of the audio, the rear view camera, the Venture Cam, the navigation system, the Traffic Message Channel and the rear seat entertainment.

The telephone system and other systems are operated by a combination of the physical buttons located on each side of the screen and the 'virtual' buttons displayed on the touch screen, in addition to the steering wheel mounted switches. For clarification, the physical buttons on the TSD are referred to as 'buttons' and the touch screen virtual buttons are referred to as 'icons'.

The dual-view TSD allows the front seat passenger to view television and video images when the car is being driven. The dual-view screen allows the driver to see the telephone or other system screens but not the TV or video when the vehicle is moving. The screen can be switched between single and dual view by pressing the audio/video button .

The TSD is mounted centrally in the instrument panel. The dual-view TSD enables the passenger and driver to view completely different images from their respective seating positions. This technology provides a solution for the legal issues attached to viewing moving images whilst the vehicle is in motion. It is not possible for the driver to view moving images with an active speed signal but the passenger can.

NOTE:

Due to legislation the NAS markets will not receive this option. A single view only display is available in these markets.

The dual-view TSD uses Parallax Barrier Shutter Technology to alternately hide and reveal columns of pixels to the left and right hand views of the screen. The display comes with a specially designed agar coating to help prevent sunlight bleaching.

MICROPHONE

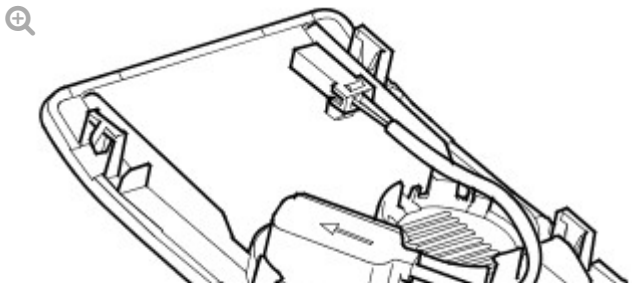

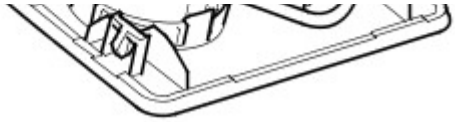

M866131

The microphone is located in the front interior lamp console. The standard, directional type microphone is connected to the Integrated Head Unit (IHU) for voice recognition of the telephone and the navigation system. The microphone has an integrated noise suppression system for hands-free telephone use.

INTEGRATED HEAD UNIT (IHU)

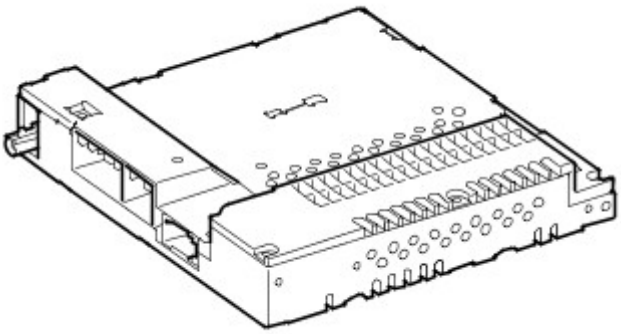

M866147

The Integrated Head Unit (IHU) is located behind the TSD in the center of the instrument panel. The IHU communicates with the Bluetooth® phone module on the MOST ring. The IHU contains the software for telephone functionality.

STEERING WHEEL CONTROL SWITCHES

ITEM	DESCRIPTION
1	Answer call/dial switch
2	End/reject call switch

The steering wheel switches for the telephone system are located on the right-hand (RH) side of the steering wheel. The driver is able to use these switches for several phone related functions including:

- Accept incoming calls

- Accept incoming calls.
- Reject incoming calls.
- Make phone calls from the phones own phone book.
- Use the voice dialing feature of the telephone system.

AUDIO AMPLIFIER

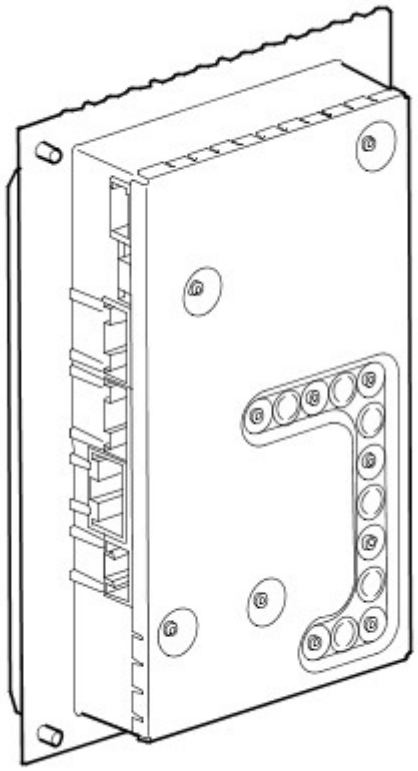

M866139

The amplifier (DSP or Logic7) is located in the rear LH side of the luggage compartment. The audio amplifier receives audio from the Bluetooth® phone module on the MOST ring, the audio is then processed and passed out to the speakers.

BLUETOOTH®

The Bluetooth® phone module allows the user to connect their own mobile phone handset (Bluetooth® enabled only) to the vehicle telephone system.

Once connected, the user can use the vehicle hands free functions. The Bluetooth® system limits the functions to those available in the Bluetooth® hands free profile.

The available features include:

- Make/receive call
- Voice calls using the phones own voice tags (where set up).
- Signal strength indication on the TSD (if supported by the telephone handset software)
- Phonebook download
- Missed calls
- Last number redial
- Calls list.

BLUETOOTH® PAIRING

Before a Bluetooth® phone handset can be used on the vehicle hands free system, the phone must be 'paired' to the Bluetooth® phone module. The following steps describe the 'pairing' process:

- On the handset, make sure that Bluetooth® is switched 'ON'.
- The user then initiates a search for other Bluetooth® devices from the handset.
- The Bluetooth® phone module acknowledges the existence of the Bluetooth® phone.
- On the handset, 'Land Rover' appears in the available device list.
- The user selects 'Land Rover' from the device list and the Bluetooth® phone module will attempt pairing.
- The Bluetooth® phone module requests a Personal Identification Number (PIN) from the handset.
- The user then enters the handset PIN 2121.
- If the PIN is correct, the phone handset will be paired with the Bluetooth® phone module and the handset details are stored in the module EEPROM. The module details are also stored in the phone handset.

When the pairing procedure is complete (assigning the phone handset to the vehicle) the phone handset will automatically connect to the vehicle system once they come into range (approximately 10 meters) and the

ignition switch on or the engine is running. The term 'Bluetooth'® is displayed in the TSD to inform the driver that the phone handset is connected to the Bluetooth® phone module , if no network operator is displayed.

Up to five Bluetooth® equipped phone handsets can be paired with the Bluetooth® phone module. A phone handset can be de-registered/disconnected from the module at any time by the user. Only one phone handset can be used on the vehicle hands free system at any one time.

If the Bluetooth® phone module is replaced, each phone handset which was paired with the original module will require re-pairing with the replacement module.

VOICE RECOGNITION

The voice recognition system controls the following systems (where fitted):

- Telephone
- Notepad
- Navigation.

The voice recognition software is contained in the Touch Screen Display (TSD). The microphone is hardwired to the TSD for voice control and the IHU for telephone. The TSD will allow voice control of the telephone system, the Notepad and the navigation system. The TSD has limited language capability with German, French, Italian, Spanish, Dutch, USA and UK supported.

The voice recognition system enables the driver to activate functions of the system without operating controls manually. This allows the driver to concentrate on driving the vehicle, improving safety. When the driver speaks one of the defined voice commands, with the voice recognition system active, the voice recognition software converts the command into a control signal for the system.

The Notepad function allows the driver to record notes of up to 30 seconds in length.

in length.

VOICE CONTROL ACTIVATION

The voice control system is controlled and activated using the Voice button located on the RH (right-hand) steering wheel switch module. Press the switch once briefly to start a voice session and press and hold to cancel a voice session.

When a voice session is started, a tone will be emitted to indicate the system is waiting for a voice command from the driver.

Once a spoken command has been given, the system will repeat the command as understood by the system as confirmation. The command will be then be performed by the relevant system or the system will ask for further clarification of the command. Always wait until after the tone is heard before giving any further commands.

If a command is not understood by the system, it will respond with the response "Sorry". The driver then has two further attempts to give the command. If the system still does not understand the command, the voice session is cancelled.

Briefly pressing the Voice button during a voice session will interrupt the audible feedback. Wait for the tone to sound before giving the next command.

A command can be cancelled by the driver giving the command "Cancel" or by pressing and holding the voice button.

A double tone indicates the voice session has been cancelled.

Refer to the Owners Handbook for details of command lists and voice control of the telephone, notepad and navigation systems.

TELEPHONE SYSTEM CONTROL DIAGRAM

NOTE:

A = Hardwired, **O** LIN bus; **P** = MOST

ITEM	DESCRIPTION
1	Battery
2	Battery Junction Box (BJB)
3	Battery Junction Box (BJB) 2
4	Rear Junction Box (RJB)
5	Clockspring
6	LH Steering wheel switches
7	RH steering wheel switches
8	Audio amplifier
9	Vehicle speakers
10	Bluetooth phone module
11	Touch Screen Display (TSD)
12	Integrated Audio Unit (IAU)
13	Microphone
14	Central Junction Box (CJB)

BLUETOOTH MODULE (G1246683)

REMOVAL AND INSTALLATION

REMOVAL

1. Disconnect the battery ground cable.
   Refer to: Specifications (414-00, Specifications).

2. 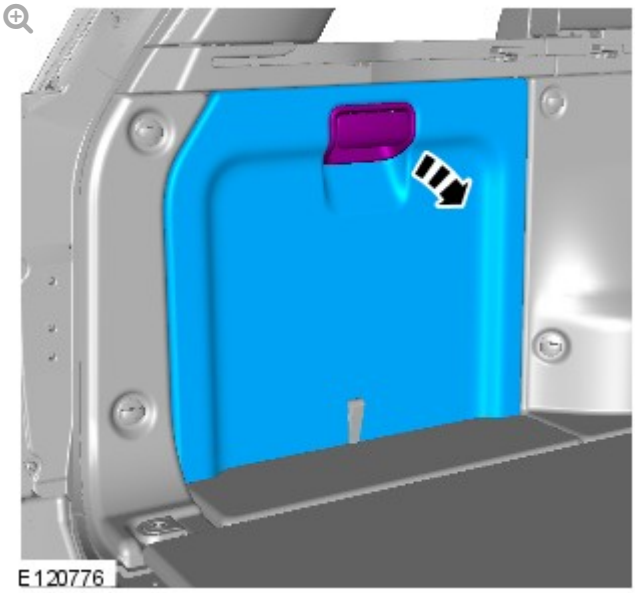

3.

   Torque: **6 Nm**

INSTALLATION

1. To install, reverse the removal procedure.

2012.0 RANGE ROVER (LM), 419-08

CELLULAR PHONE

MICROPHONE (G552927)

REMOVAL AND INSTALLATION

REMOVAL

1. Carefully release the overhead console center panel.

- Release the 4 clips.

2.

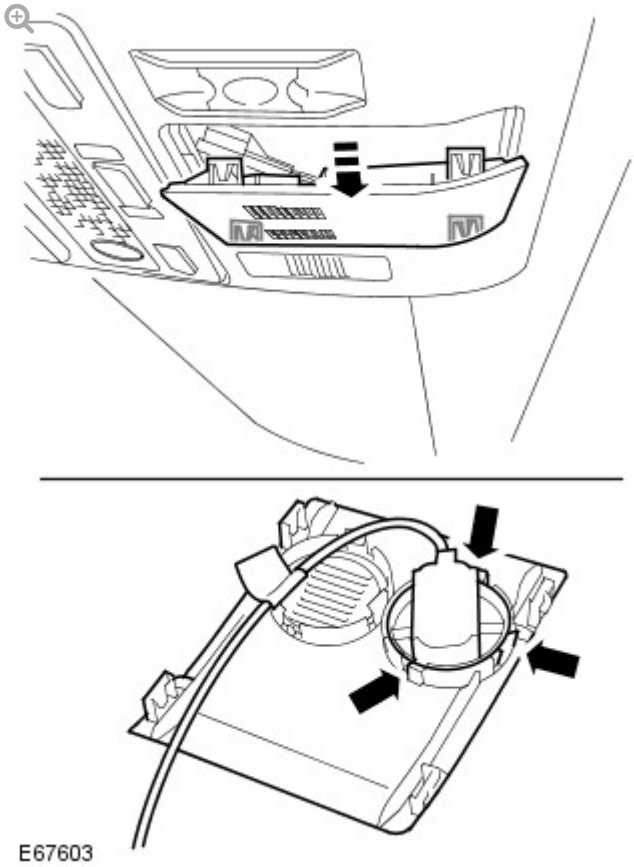

Remove the cellular phone microphone.

- Disconnect the electrical connector.
- Release the 3 clips.

INSTALLATION

1. Install the cellular phone microphone.
   - Secure in the clips.
   - Connect the electrical connector.
2. Install the overhead console center panel.

This section contains no data

MULTIFUNCTION ELECTRONIC MODULES

DIAGNOSIS AND TESTING

DESCRIPTION AND OPERATION

For a detailed description of the Driver/Passenger Door modules and operation, refer to the relevant Description and Operation section in the workshop manual.
REFER to: Module Controlled Functions (419-10 Multifunction Electronic Modules, Description and Operation).

INSPECTION AND VERIFICATION

1. Verify the customer concern.

1. Visually inspect for obvious signs of electrical damage.

Visual Inspection

ELECTRICAL
▪ Fuse(s) ▪ Electrical connector(s) ▪ Wiring Harness

1. If an obvious cause for an observed or reported concern is found, correct the cause (if possible) before proceeding to the next step.

1. If the cause is not visually evident, check for DTCs and refer to the DTC Index.

DTC INDEX

For a list of Diagnostic Trouble Codes (DTCs) that could be logged on this vehicle, please refer to Section 100-00. REFER to: Diagnostic Trouble Code (DTC) Index - DTC: Module Name: Driver/Passenger Door Module (100-00, Description and Operation).

2012.0 RANGE ROVER (LM), 419-10

MULTIFUNCTION ELECTRONIC MODULES

INFORMATION AND ENTERTAINMENT MODULE

(G927023)

REMOVAL AND INSTALLATION

REMOVAL

1. Disconnect the battery ground cable.
   For additional information, refer to: Specifications (414-00, Specifications).

2. Remove the access panel from the loadspace trim panel LH.

3. Remove the loadspace trim panel, floor stowage compartment LH access cover.

4. Raise and support the spare tire loadspace trim panel.

5. 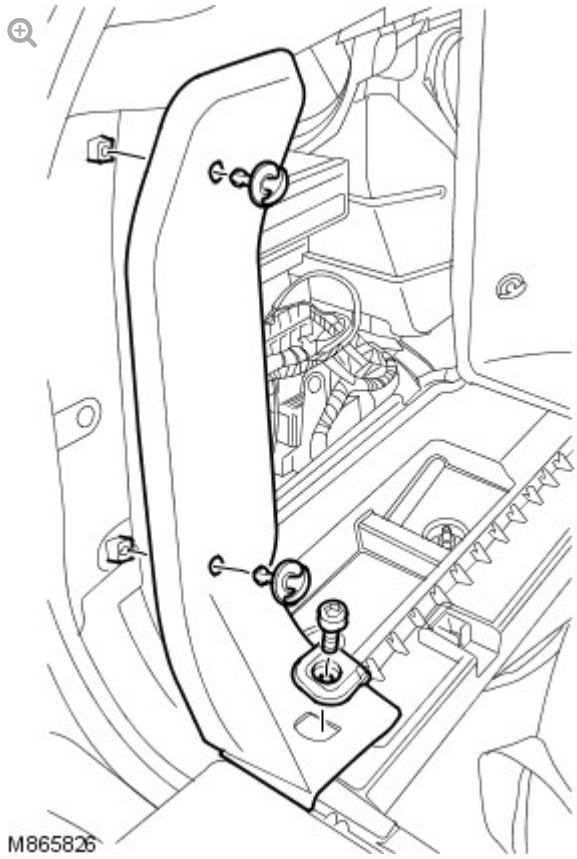

   Remove the LH finisher trim panel.

   - Remove the luggage tie down ring.
   - Remove the 2 turn fasteners securing the LH finisher trim panel.

6. Remove the lower turn fastener, securing the front loadspace trim

panel LH.

7. Remove the trim clip securing the front loadspace trim panel LH to the floor stowage compartment.

8.

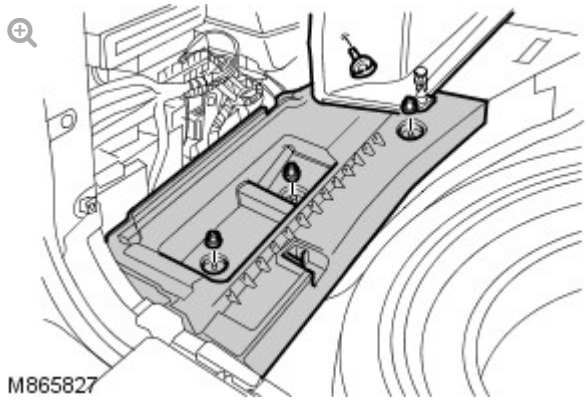

Remove the LH floor stowage compartment.

- Remove the 3 nuts.

9.

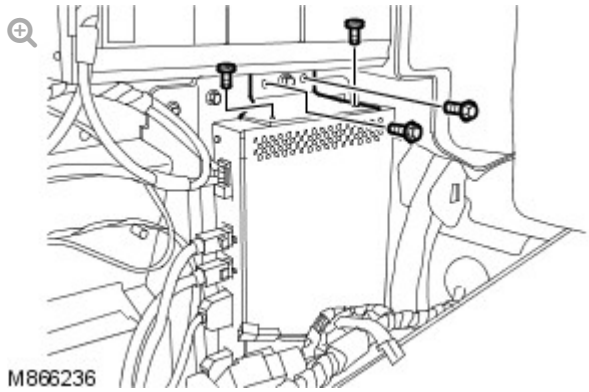

Remove the information and entertainment module upper bracket.

- Remove the 2 bolts.
- Remove the 2 screws.

10.

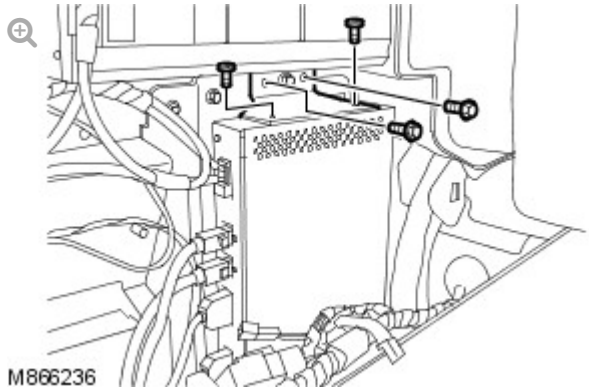

Release the information and entertainment module from its lower locating bracket.

11.

CAUTION:

Cover fiber optic cable connectors to minimize dust ingress and avoid bending the cables in a radius of less than 30 mm.

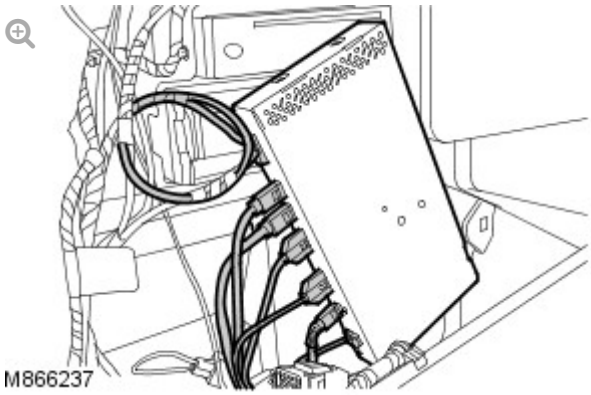

Remove the information and entertainment module.

- Disconnect the optical connector.
- Disconnect the 7 electrical connectors.

12.

Remove the information and entertainment module lower bracket.

- Remove the 2 screws.

INSTALLATION

1. Install the information and entertainment lower bracket.
   - Install the screws.
2. Install the information and entertainment module.
   - Connect the optical connector.
   - Connect the electrical connectors.
3. Install the information and entertainment module upper bracket.
   - Tighten the bolts to 10 Nm (7 lb.ft).
4. Install the LH floor stowage compartment.
   - Install the nuts.
5. Install the trim clip securing the front loadspace trim panel LH to the floor stowage compartment.
6. Install the lower turn fastener, securing the front loadspace trim panel to the floor stowage compartment.
7. Install the LH finisher trim panel.
   - Install the turn fasteners.
8. Install the luggage tie down ring.
   - Tighten the bolt to 25 Nm (18 lb.ft).
9. Lower and secure the spare tire loadspace trim panel.
10. Install the loadspace trim panel, floor stowage compartment LH access cover.
11. Install the access panel to the loadspace trim panel LH.
12. Connect the battery ground cable.
    For additional information, refer to: Specifications (414-00, Specifications).

13. Using the Land Rover approved diagnostic system, follow the on-screen instructions and configure the information and entertainment module.

2012.0 RANGE ROVER (LM), 419-10

MULTIFUNCTION ELECTRONIC MODULES

REAR ENTERTAINMENT CONTROL MODULE – ULTIMATE (G1451328)

REMOVAL AND INSTALLATION

REMOVAL

NOTE:

Removal steps in this procedure may contain installation details.

1. Refer to: Lower Glove Compartment (501-12, Removal and Installation).

2.

3.

4.

- *Torque:* **5 Nm**

INSTALLATION

1. To install, reverse the removal procedure.

BODY SYSTEM – GENERAL INFORMATION

SPECIFICATIONS

Torque Specifications

DESCRIPTION	NM	LB-FT
Tailgate latch bolts	25	18
Tailgate catch bolts	25	18
Liftgate latch bolts	10	7
Liftgate catch bolts	10	7
Front door window glass bolts	10	7
Front door window regulator upper bolts	10	7
Front door window regulator lower bolts +	10	7
Rear door window regulator upper bolts	10	7
Rear door window regulator lower bolts +	10	7
Door latch screws	10	7
Rear spoiler bolts	10	7
Front bumper:		
Nuts	45	33
bolts	10	7
Door mirror assembly to door screws	9	7
Door mirror motor screws	1.4	1
A pillar trim panel screw	2	1.5
In vehicle cross beam to bulkhead nuts and bolts	25	18
Center in vehicle cross beam support bracket bolts	25	18
Floor console support bracket bolts	10	7

Automatic transmission selector nuts	25	18
Headliner to roof opening panel screws	3	2
Front seat bolts	45	33
Rear seat bolts	25	18
Seat belt anchor to seat bolt	48	35
Roof opening panel motor		
Torx screws	5	3.7
Allen screw	10	7
+ New bolts must be installed		

2012.0 RANGE ROVER (LM), 501-00

BODY SYSTEM – GENERAL INFORMATION

DESCRIPTION AND OPERATION

FRONT END SHEET METAL REPAIRS

Front End Sheet Metal Parts

ITEM	DESCRIPTION
1	Front side member and suspension top mount assembly
2	Front side member extension - inner
3	Side member deformation element
4	Front side member extension - outer
5	Fender apron panel reinforcement rear section
6	Fender apron panel closing panel
7	Fender apron panel inner reinforcement
8	Brake hose bracket
9	Brake pipe support bracket
10	Fender apron panel
11	Fender apron panel extension
12	Front bumper mounting

The following links below will provide additional information on the indicated subject.

For additional information, refer to: Front Side Member and Suspension Top Mount Assembly (501-27 Front End Sheet Metal Repairs, Removal and Installation).

For additional information, refer to: Front Side Member Extension (501-27 Front End Sheet Metal Repairs, Removal and Installation).

For additional information, refer to: Fender Apron Panel Reinforcement Rear Section (501-27 Front End Sheet Metal Repairs, Removal and Installation).

For additional information, refer to: Fender Apron Panel Closing Panel (501-27 Front End Sheet Metal Repairs, Removal and Installation).

For additional information, refer to: Fender Apron Panel Inner Reinforcement (501-27 Front End Sheet Metal Repairs, Removal and Installation).

Front End Serviceable Parts

ITEM	DESCRIPTION
1	Hood latch panel
2	Headlamp mounting bracket - LH
3	Headlamp mounting bracket - RH
4	Auxiliary front crossmember

The following links below will provide additional information on the indicated subject.

For additional information, refer to: Hood Latch Panel (501-27 Front End Sheet Metal Repairs, Removal and Installation).

For additional information, refer to: Auxiliary Front Crossmember (501-27 Front End Sheet Metal Repairs, Removal and Installation).

TIME SCHEDULES – FRONT END SHEET METAL REPAIRS

The following information shows the total time taken to replace single panels and complete assemblies. This time includes removal of Mechanical, Electrical and Trim (MET) items, plus paint times based on Metallic Clear Over Base Paint.

The times shown were generated by Thatcham (the motor insurance repair and research center) and are to be used as a guide only.

Single Panel Times

PANEL DESCRIPTION	TOTAL TIME
Hood	7.7
Hood latch panel	1.5

Headlamp mounting bracket - LH	1.9
Headlamp mounting bracket - RH	2.0
Fender	7.0

COMBINATION PANEL REPLACEMENT TIMES

The following combination times show the total time to remove and refit body panels, MET items and any paint process.

Front End Sheet Metal Repairs - Combination Panel Times

PANEL DESCRIPTION	TOTAL TIME
Hood latch panel	
Front bumper cover	
Headlamp mounting bracket	
Fender	
Total Time	**11.6**

Front End Sheet Metal Repairs - Combination Panel Times

PANEL DESCRIPTION	TOTAL TIME
Hood latch panel	
Front bumper cover	
Headlamp mounting brackets - LH and RH	
Total Time	**14.4**

Front End Sheet Metal Repairs - Combination Panel Times

PANEL DESCRIPTION	TOTAL TIME
Hood latch panel	
Front bumper cover	
Front bumper	
Front side member closing panel	
Front side member front extension	

Auxiliary front crossmember	
Headlamp mounting bracket - LH and RH	
Fender	
Fender apron panel extension	
Fender apron panel reinforcement	
Total Time	**29.9**

Front End Sheet Metal Repairs - Combination Panel Times

PANEL DESCRIPTION	TOTAL TIME
Hood latch panel	
Front bumper cover	
Front bumper	
Front side member closing panel - LH and RH	
Front side member front extension - LH and RH	
Auxiliary front crossmember	
Headlamp mounting bracket - LH and RH	
Fender - LH and RH	
Fender apron panel extension - LH and RH	
Fender apron panel reinforcement - LH and RH	
Total Time	**41.3**

Front End Sheet Metal Repairs - Combination Panel Times

PANEL DESCRIPTION	TOTAL TIME
Hood latch panel	
Front bumper cover	
Front bumper	
Front side member closing panel	
Front side member front extension	
Auxiliary front crossmember	
Fender - LH and RH	

Headlamp mounting brackets - LH and RH	
Total Time	**19.3 LH / 19.2 RH**

Front End Sheet Metal Repairs - Combination Panel Times

PANEL DESCRIPTION	TOTAL TIME
Fender apron panel reinforcement	
Fender apron reinforcement panel rear section	
Fender	
Headlamp mounting bracket - LH and RH	
Auxiliary front crossmember	
Front side member and suspension top mount assembly	
Front crossmember	
Front side member front extension	
Front bumper	
Front bumper cover	
Hood latch panel	
Total Time	**50.1 LH / 49.2 RH**

SIDE PANEL SHEET METAL REPAIRS

Side Panel Sheet Metal Parts

ITEM	DESCRIPTION
1	Rear inner quarter panel
2	D-pillar closing panel
3	Rear wheelhouse outer
4	Rear inner wheelhouse half
5	Rear quarter panel lower extension

6	Rear quarter panel lower extension
7	Rear lamp mounting panel
8	Rear lamp mounting panel
9	Rear lamp mounting panel - inner
10	Rear lamp mounting panel - upper
11	Rear lamp mounting panel - lower

Front and Rear Door Assemblies

ITEM	DESCRIPTION
1	Front door
2	Rear door

The doors are serviced as complete assemblies only. Door skins are not available as a serviceable part.

Side Panel Sheet Metal Assemblies

ITEM	DESCRIPTION
1	Side panel front section
2	Rear quarter panel
3	Side panel

Side Panel - Inner

ITEM	DESCRIPTION
1	Side panel - inner
2	Side panel extension
3	Roof opening panel - front drain tube
4	Roof opening panel - rear drain tube

Roof Opening Panel - Drain Tube Clip Location

ITEM	DESCRIPTION
A	Metal clip, welded to the panel
B	Plastic clip
C	Expanding foam block, clipped to the panel

Section A-A and B-B show the approximate position of each drain tube in the side panel - inner.

The letters A, B and C highlight the position and type of clips used to hold the roof opening panel drain tubes in place.

The following links below will provide additional information on the indicated subject.

For additional information, refer to: A-Pillar Assembly (501-29 Side Panel Sheet Metal Repairs, Removal and Installation).

For additional information, refer to: A-Pillar Reinforcement (501-29 Side Panel Sheet Metal Repairs, Removal and Installation).

For additional information, refer to: B and C-Pillar Assembly (501-29 Side Panel Sheet Metal Repairs, Removal and Installation).

For additional information, refer to: Rocker Panel (501-29 Side Panel Sheet Metal Repairs, Removal and Installation).

For additional information, refer to: Rocker Panel Inner Reinforcement (501-29 Side Panel Sheet Metal Repairs, Removal and Installation).

For additional information, refer to: Rocker Panel Section (501-29 Side Panel Sheet Metal Repairs, Removal and Installation).

TIME SCHEDULES – SIDE PANEL SHEET METAL REPAIRS

The following information shows the total time taken to replace single panels and complete assemblies.

These times include the removal of mechanical, electrical and trim (MET) items, plus paint times based on metallic clear over base paint.

The times shown were generated by Thatcham (motor insurance repair and research center) and are to be used as a guide only.

Single Panel Times

PANEL DESCRIPTION	TOTAL TIME
Front door	8.6
Rear door	8.4
Rocker panel - LH	20.7
Rocker panel - RH	21.3
Rocker panel section - LH	23.5
Rocker panel section - RH	24.3
Rear quarter panel - LH	26.0
Rear quarter panel - RH	28.0

COMBINATION PANEL REPLACEMENT TIMES

The following combination panel times show the total time to remove and refit body panels, MET items and any paint process.

Side Panel Sheet Metal Repairs - Combination Panel Times

PANEL DESCRIPTION	TOTAL TIME
Front door	
Fender	11.7

Fender	

Side Panel Sheet Metal Repairs - Combination Panel Times

PANEL DESCRIPTION	TOTAL TIME
Rear door	
Rear quarter panel	
Total Time	**29.3 LH / 31.4 RH**

Side Panel Sheet Metal Repairs - Combination Panel Times

PANEL DESCRIPTION	TOTAL TIME
B and C-pillar assembly	
Front door	
Rear door	
Rocker panel section	
Total Time	**34.5 LH / 35.3 RH**

Side Panel Sheet Metal Repairs - Combination Panel Times

PANEL DESCRIPTION	TOTAL TIME
Front door	
Rear door	
Side panel	
Fender	
Total Time	**51.3 LH / 53.0 RH**

Side Panel Sheet Metal Repairs - Combination Panel Times

TOTAL TIME	TOTAL TIME
Front door	
A-pillar assembly	
A-pillar reinforcement	
Instrument panel (for remove and install)	

Windshield	
Fender	
Fender apron panel	
Total Time	**40.0 LH / 39.6 RH**

REAR END SHEET METAL REPAIRS

Rear End Sheet Metal Parts

ITEM	DESCRIPTION
1	Spare wheel well
2	Rear side member - RH
3	Rear side member - LH
4	Rear floor panel section - RH
5	Rear floor panel section - LH
6	Rear subframe front mounting point
7	Rear subframe rear mounting point
8	Spare tire mounting bracket
9	Rear side member closing panel RH
10	Rear side member closing panel LH
11	Rear crossmember
12	Rear crossmember section

The following links below will provide additional information on the indicated subject.

For additional information, refer to: Spare Wheel Well (501-30 Rear End Sheet Metal Repairs, Removal and Installation).

For additional information, refer to: Rear Side Member (501-30 Rear End

Sheet Metal Repairs, Removal and Installation).

For additional information, refer to: Rear Floor Panel Section (501-30 Rear End Sheet Metal Repairs, Removal and Installation).

For additional information, refer to: Rear Crossmember (501-30 Rear End Sheet Metal Repairs, Removal and Installation).

For additional information, refer to: Rear Crossmember Section (501-30 Rear End Sheet Metal Repairs, Removal and Installation).

Liftgate and Tailgate Assemblies

ITEM	DESCRIPTION
1	Liftgate assembly
2	Tailgate assembly

TIME SCHEDULES – REAR END SHEET METAL REPAIRS

The times shown were generated by Thatcham (the motor insurance repair and research center) and are to be used as a guide only.

Single Panel Times

PANEL DESCRIPTION	TOTAL TIME
Liftgate assembly	8.6
Tailgate assembly	6.9
Rear crossmember	14.0
Roof panel	21.6

COMBINATION PANEL REPLACEMENT TIMES

The following combination times show the total time to remove and refit body panels, MET items and any paint process.

Rear End Sheet Metal Repairs - Combination Panel Times

PANEL DESCRIPTION	TOTAL TIME
Rear bumper	
Rear crossmember	
Rear crossmember section	
Rear quarter panel	
Total Time	**36.7 LH / 38.8 RH**

Rear End Sheet Metal Repairs - Combination Panel Times

PANEL DESCRIPTION	TOTAL TIME
Rear bumper	
Rear crossmember	
Rear crossmember section	
Rear quarter panel LH and RH	
Total Time	**56.3**

Rear End Sheet Metal Repairs - Combination Panel Times

PANEL DESCRIPTION	TOTAL TIME
Rear bumper	
Rear quarter panel	
Spare wheel well	
Rear side member section	
Rear crossmember section	
Rear crossmember	
Rear floor panel section	
Front fender	
Rear wheelhouse reinforcement - upper	
Rear inner quarter panel	
Total Time	**54.1 LH / 55.4 RH**

Rear End Sheet Metal Repairs - Combination Panel Times

PANEL DESCRIPTION	TOTAL TIME
Rear bumper	
Rear quarter panel LH and RH	
Spare wheel well	
Rear side member section LH and RH	
Rear crossmember section	
Rear crossmember	
Rear floor panel section LH and RH	
Rear wheelhouse reinforcement - upper LH and RH	
Rear inner quarter panel LH and RH	
Total Time	**81.3**

ROOF SHEET METAL REPAIRS

Roof Panel Assemblies

ITEM	DESCRIPTION
1	Roof panel - fixed roof panel
2	Roof panel - roof opening panel

The following link below will provide additional information on the indicated subject.

For additional information, refer to: Roof Panel (501-28 Roof Sheet Metal Repairs, Removal and Installation).

TIME SCHEDULES – REAR END SHEET METAL REPAIRS

The times shown were generated by Thatcham (the motor insurance repair and research center) and are to be used as a guide only.

Single Panel Times

Single Panel Times

PANEL DESCRIPTION	TOTAL TIME
Roof panel	21.6

GENERAL WELDING PRECAUTIONS

For ease of reference, the illustrations on the following pages show only the type of weld used in the repair where it varies from that used in production.

The replacement welds in the welding illustrations are denoted by the following symbols:

REPLACEMENT WELDS

Graphic Legend

1 Single/Multiple thickness plug welds.

2 MIG seam weld.

WELDING OBSERVATIONS

When carrying out welding operations the following criteria must be observed.

Recommendations

- Where resistance spot welds have been used in production, these must be reproduced with new spot welds in replacement where possible. All such reproduction spot welds must be spaced 30 mm (1.181 inches) apart.
- When spot welding, it is recommended that test coupons of the same metal gauges and materials are produced to carry out peel tests to make sure that welding equipment being used can produce a satisfactory joint. Plug welds must be used if a satisfactory spot weld can not be produced.
- The electrode arms on hand-held spot welding guns must not exceed 300 mm (11.811 inches) in length.
- Single-side spot welding is not acceptable.

- Single-side spot welding is not acceptable.
- Brazing and gas welding are not acceptable EXCEPT where they have been specified in production.
- Where 3 metal thicknesses or more are to be welded together, it is imperative to use MIG plug welds to make sure joint strength is to the required weld quality.
- MIG plug welds must be used in repair joints where no access for a resistance spot welder. To replace each production spot weld, an 8 mm (0.314 inch) approximate hole must be drilled and/or punched, and a MIG plug weld then made in its place. The number of plug welds must match exactly the number of spot welds which have been removed.
- Where holes are left in an existing panel after removal of the spot welds, a single MIG plug weld will be made in each holes as appropriate.

ELECTRONIC CONTROL MODULES

The electronic control modules fitted to vehicles make it advisable to follow suitable precautions prior to carrying out welding repair operations. Harsh conditions of heat and vibration may be generated during these operations which could cause damage to the units.

In particular, it is essential to follow the appropriate precautions when disconnecting or removing the air bag diagnostic monitor.

EQUIPMENT

Prior to commencing any test procedure on the vehicle, make sure that the relevant test equipment is working correctly and any harness or connectors are in good condition. This particularly applies to electronic control modules.

SEAT BELT ANCHORAGES

Seat belt anchorages are safety critical. When making repairs in these areas, it is essential to follow design specifications. Note that High Strength Low Alloy (HSLA) steel may be used in seat belt anchorages.

Where possible, the original production assembly should be used, complete with its seat belt anchorages, or the cut line should be so arranged that the original seat belt anchorage is not disturbed.

WARNING:

> Body parts incorporating seat belt anchorages MUST be renewed completely if damaged beyond repair, as the welds in these areas are safety critical and can not be disturbed.

All welds within 250 mm (9.842 inches) of seat belt anchorages must be carefully checked for weld quality, including spacing of spot welds.

HIGH STRENGTH STEELS

Body panels are being increasingly manufactured in high strength steels to meet design requirements for safety and weight saving. As panels in high strength steels can not be visually identified by the repairer, and as they can be more sensitive to excess heat than would be the case with low carbon steels, it is advisable that the following procedure be observed at all times.

While individual repairs will differ in detail, the following Panel Replacement Procedure has been devised placing emphasis on ease of repair and the elimination of unnecessary work. Where replacement of a particular panel involves departure from the Panel Replacement Procedure, a note to that effect is included in the relevant panel replacement operation.

STRAIGHTENING

Whenever possible, structural members should be cold straightened under tension. Do not attempt to straighten with a single pull but rework the damaged area using a series of pulls, releasing tension between each stage and using the opportunity to check alignment.

BODY JIG

Unless damage is limited to cosmetic panels, all repair work to body members must be carried out on a body jig, to make sure that impact damage has not spread into more remote parts of the structure. Mounting on a jig will also make sure that the straightening and panel replacement procedures do not cause further distortion. If original dimensions cannot be satisfactorily restored by these methods, damaged structural members should be replaced.

WARNING:

WARNING:

Damaged areas should be cut away using a high speed saw, NOT an oxy-acetylene torch.

As a rule, body dimensions are symmetrical about the center line. A good initial check for distortion is therefore to measure diagonally and to investigate apparent differences in dimensions.

INSPECTION

Every accident produces individual variations in damage. Each repair is influenced by the extent of the damage and the facilities and equipment available for its rectification. Most accident damage can be visually inspected and the approximate extent of damage assessed.

Sometimes deformation will extend beyond the directly damaged area, and the severity of this must be accurately established so that steps can be taken to restore critical body components to their original dimensions. An initial check can be carried out by means of drop checks or, preferably, trammels.

Gauges are available which will accurately check for body twist. Where repairs necessitate renewal of a critical body component it is recommended that a body jig is used.

PANEL REPLACEMENT PROCEDURE

DAMAGED PANEL REMOVAL

The following information is designed to explain the basic panel removal and replacement method.

This method standard may vary slightly from one vehicle to another.

The main criteria in the removal and installation of body panels is that original standard recommended by Land Rover is maintained as far as possible.

1. Expose resistance spot welds. For those spot welds which are not obviously visible, use a rotary drum sander or wire brush fitted to an air drill, or alternatively a hand held wire brush.

NOTE:

> In wheel arch areas it may be necessary to soften underbody coating, using a hot air gun prior to exposing spot welds.

2. Cut out welds using a cobalt drill.

3. Alternatively, use a clamp-type spot weld remover.

4. Cut away the bulk of the panel as necessary using an air saw.

NOTE:

> On certain panel joints, MIG welds and braze should be removed using a sander where possible, before cutting out the panel bulk.

5. Separate spot welded joints and remove panel remnants using hammer, bolster chisel and pincers.

EXISTING PANEL PREPARATION

NOTE:

Prior to sanding, remove remaining sealant using a hot air gun to minimize the risk of toxic fumes caused by generated heat.

1. Clean all panel joint edges to a bright smooth finish, using a belt-type sander.

CAUTION:

Care must be taken to avoid excessive heat build up when using this equipment.

CAUTION:

Never use the same tools for working with steel or aluminum. All tools used for working with steel must be kept separate from those used on aluminum.

2. Straighten existing panel joint edges using a shaping block and hammer.

NEW PANEL PREPARATION

1. Mark out the bulk of new the panel and trim to size, leaving approximately 50 mm (1.968 inches) overlap with the existing panel.

Offer up new panel/section, align with associated panels (e.g. new body side panel aligned with door and trunk lid). Clamp the prepared panel into position.

2. Cut new and existing panels as necessary to form butt, joggle or brace joint as required. Remove all clamps and metal remnants.

3. Prepare new panel joint edges for welding by sanding to a bright finish. This must include inner as well as outer faces.

4. Apply a suitable weld-through primer, to panel joint surfaces that are to be welded, using a brush or aerosol can as required.

5. Apply adhesive sealant to panel joint surfaces.

PANEL INSTALLATION

1. Offer up the new panel and align with associated panels. Clamp the panel into position using welding clamps or mole grips.

NOTE:

> In cases where access for welding clamps is difficult, it may be necessary to use tack welds.

Where a joggle or brace joint is being adopted, make a set in the original panel joint edge or insert a brace behind the joint.

EQUIPMENT PREPARATION

1. Select the arms for resistance spot welding and shape the electrode tips using a tip trimmer.

Tips should be dressed so the diameter is equal to twice the thickness of the

Tips should be dressed so the diameter is equal to twice the thickness of the metal to be welded plus 3 mm (0.118 inch).

CAUTION:

Use arms not exceeding 300 mm (11.811 inches) in length.

NOTE:

To maintain weld efficiency, the tips will require regular cleaning and dressing.

2. Fit the resistance spot welding arms and test equipment for satisfactory operation, using test coupons.

Where monitoring equipment is not available, verify weld strength by checking that metal around the weld puddle pulls apart under tension during pulling.

PANEL ATTACHMENT

1. Use a resistance spot welder where access permits.

Try to make sure weld quality by using a welding monitor where possible.

2. Using MIG equipment, tack weld butt joints and re-check alignment and panel contours where necessary. Make sure that a gap is maintained to minimize welding distortion, by inserting a hacksaw blade as an approximate guide.

3. Dress the MIG tack welds using a sander with 36 grit disc, or a belt-type sander where access is limited.

4. MIG seam weld butt joints. When MIG welding long joints, a large amount of heat is generated which can cause the panels to distort.

5. To avoid heat distortion, divide the welds into small sections as shown in the illustration. The large arrows signifies the direction of welding.

6. Always use MIG plug welds where excessive metal thickness or limited access make resistance spot welding impractical.

Make plug welds either by using holes left by the spot weld cutter, or through holes punched and drilled for the purpose, approximately 8 mm (0.134 inch) diameter.

7. Dress all welds using either a sander with 36 grit disc, or a belt-type sander and/or wire brush. When dressing welds make sure an area as small as possible is removed to protect the zinc coating.

8. Carry out any further necessary sealing operations.

PANEL JOINT TYPES

ITEM	DESCRIPTION
1	Between panels - bolted
2	Panel edges - bolted
3	Between panels - spot welded
4	Panel edges - spot welded
5	Between panels - bonded
6	Panel edges - bonded
7	Clinch joint - type (a)
8	Clinch joint - type (b)
9	Clinch joint - type (c)
10	Gaps between panels - type (a)
11	Gaps between panels - type (b)
12	Lap joint

PANEL PREPARATION

GENERAL

Replacement panels are supplied with a cathodic primer coating as part of the panel protection and in compliance with the vehicle's Corrosion Warranty, where applicable.

DO NOT remove the primer before paint refinishing. In the event of localized surface damage or imperfections, make sure that only the minimum of primer is removed during any rectification work, to achieve an effective repair.

Rectify damage as far as possible by panel beating or straightening.

To remove corrosion or paint runs on the outer surfaces, abrade the primer coat in the affected area as necessary using the following procedure:

Care Points

1. Clean the panel using a solvent wipe
2. Treat exposed areas of metal with an etch phosphate process

2 Treat exposed areas of metal with an etch phosphate process

3 Re-treat the affected area using either a separate acid-etch primer and two-pack surface treatment, or an integrated etch primer/filler

PANEL PREPARATION

The following procedures should be applied when repairing panels:

Welded Panels

1 Remove primer from the immediate vicinity of new and existing panel flanges, cleaning to bright metal finish

2 On joints to be spot welded, apply weld-through zinc rich primer to joint faces of both flanges. Make spot welds while primer is still wet or according to the manufacturer's instructions

3 Dress accessible weld joints

4 Clean panel using solvent wipe

5 Treat bare metal with an etch phosphate process

6 Re-treat repaired areas

When replacing part or sectioned panels, the basic procedure is the same as for welded panels described above, with the following variations

Sectioned Panels

1 Remove primer from both new and existing joint faces, cleaning to a bright metal finish

2 Where an overlap joint with the existing panel is to be spot welded, apply weld-through, zinc rich primer to both joint faces and spot weld while the primer is still wet, or according to the manufacturer's instructions

3 MIG weld butt joints where applicable

4 Clean the panel with a solvent wipe

5 Treat bare metal areas using an etch phosphate process

6 Re-prime affected areas as necessary as for rectifying transit damage

7 Treat the inner faces of lap or butt joints with a suitable cavity wax

Clinched Panels

1. Abrade primer on new and existing panel joint faces, and clean using a solvent wipe
2. Apply metal-to-metal adhesive where applicable
3. Where joints are to be spot welded, apply suitable weld-through, zinc rich primer to weld areas
4. Where joints are to be MIG, arc or gas welded, apply zinc rich primer in adjacent areas but leave the welded area untreated
5. To retain the panel while clinching the flanges, tack spot weld or plug weld as appropriate
6. Clean the panel with a solvent wipe
7. Treat bare metal areas with a suitable etch phosphate process
8. Re-prime affected areas as necessary as for rectifying transit damage

PAINT PREPARATION

The following process must be adhered to for paint refinishing operations:

1. Seal required exterior and interior seams with an approved seam sealer
2. Repair any damage to underbody sealers
3. Apply a two-pack paint refinishing system
4. Apply cavity wax to all interior surfaces which have not received refinish paint

PAINT REPAIRS

Before carrying out paintwork repairs, clean the vehicle thoroughly using either a steam cleaner or high-pressure washer.

Wash locally repaired areas using a mild water-mixable detergent and wipe clean with solvent, immediately before paint application.

WARNING:

When preparing bumpers for painting, make sure the parking

When preparing bumpers for painting, make sure the parking distance control (PDC) sensors are not damaged. Only remove the clear coat if possible. When painting the PDC sensors, do not apply excessive layers of paint as this can hinder the performance of the sensors.

ITEM	DESCRIPTION
A	Two-pack top coat
B	Two-pack primer filler and etch primer
C	Etch phosphate

CAUTION:

When heat curing paint repairs, the temperature must not exceed 65°C (149°F). Temperatures above this figure will cause the reflective elements within the headlamps and tail lamps to distort and may damage other components.

Make sure that damaged paintwork which has led to exposed metal is abraded until the metal is clean, extending beyond the area of the original damage.

Treat the bare metal with an etch phosphate to remove all traces of rust and to provide a key for new paint coats.

Re-treat the affected area using either a separate acid-etch primer and two-pack treatment or an integrated etch primer/filler, and follow with a two-pack paint system.

Treat those surfaces not receiving paint using an approved cavity wax, following paint operations.

FRONT END BODY PANELS

Torque Specifications

DESCRIPTION	NM	LB-FT
* Radiator grille support nuts	10	7

*** New nuts must be installed**

FRONT END BODY PANELS

COWL PANEL GRILLE (G913875)

REMOVAL AND INSTALLATION

80.15.62	PLENUM - AIR INTAKE - RENEW	ALL DERIVATIVES	0.2	USED WITHINS	+

SPECIAL TOOL(S)

	100-005A(LRT-99-500A) General purpose puller

REMOVAL

1. Remove the RH windshield moulding.
   For additional information, refer to: Windshield Moulding (501-11 Glass, Frames and Mechanisms, Removal and Installation)

Glass, Frames and Mechanisms, Removal and Installation).

2. Remove both nut covers from the 2 windshield wiper pivot arms and remove the 2 nuts.

3. Remove both windshield wiper pivot arms from the pivot shafts.

4. Using special tool, remove and discard the windshield wiper pivot arm aluminum boss from the 2 pivot shafts.

5. Remove the 2 plastic inserts from the windshield wiper pivot arm pivot shafts.

6. Release the 2 drain tubes from the underside of the cowl panel grille.

7. Release the 4 cowl panel grille clips and reposition away from the pivot shafts.

8. Remove the cowl panel grille.
   - Reposition the cowl panel grille away from the LH windshield moulding.

INSTALLATION

1. Install the cowl panel grille.
   - Reposition below the LH windshield moulding and secure with the clips.

2. Secure the drain tubes to the cowl panel grille.

3. Install the plastic inserts to the windshield wiper pivot arm pivot shafts.

4. Install a new aluminum boss to each windshield wiper pivot arm pivot shaft.

5. Install both windshield wiper pivot arms to the pivot shafts.
   - Install a new nut but do not tighten the nut fully at this stage.

6. Align the special tool between points A and B on the windshield wiper pivot arm.
   - Align the face of the windshield wiper pivot arm to the special tool angle of 86 degrees.

7. Retaining an 86 degrees angle, set the respective windshield wiper pivot arm to the dimension shown.
   - Passenger side C = 58 mm (2.283 inches). Drivers side D = 40.5 mm (1.594 inches).
   - The measurement must be taken from the plenum chamber glass seal, to the lip of the windshield wiper blade adjacent to the windshield wiper pivot arm fulcrum.

8. Tighten the windshield wiper pivot arm nuts.
   - Tighten the nuts to 35 Nm (26 lb.ft).

9. Install both windshield wiper pivot arm nut covers.

10. Install the RH windshield moulding.

For additional information, refer to: Windshield Moulding (501-11 Glass, Frames and Mechanisms, Removal and Installation).

2012.0 RANGE ROVER (LM), 501-02

FRONT END BODY PANELS

ENGINE UNDERSHIELD (G457364)

REMOVAL AND INSTALLATION

76.10.50	ENGINE UNDERSHIELD - CENTRE - RENEW	ALL DERIVATIVES	0.1	USED WITHINS	+

REMOVAL

1. **WARNING:**

   Do not work on or under a vehicle supported only by a jack. Always support the vehicle on safety stands.

   Raise and support the vehicle.

2. Remove the engine undershield.

   - Remove the 6 screws.

INSTALLATION

1. To install, reverse the removal procedure.

2012.0 RANGE ROVER (LM), 501-02

FRONT END BODY PANELS

FENDER (G1225041)

REMOVAL AND INSTALLATION

76.10.24	FENDER - FRONT - LH/EACH - REMOVE FOR ACCESS AND REFIT	ALL DERIVATIVES	1.7	USED WITHINS	+

REMOVAL

1. Secure the hood in the service position.

2. Remove the front fender trim panel.
   For additional information, refer to: Front Fender Trim Panel (501-08, Removal and Installation).

3. Remove the headlamp assembly.
   For additional information, refer to: Headlamp Assembly (417-01, Removal and Installation).

4. **NOTE:**

   Note the fitted position of the fender before removal.

   Release the fender.
   - Remove the 8 bolts.
   - Remove the 2 spacers.

5. Remove the side turn signal lamp.
   - Push the lamp forwards to release it from the fender.
   - Release the clip.
   - Disconnect the electrical connector.

6. Remove the fender.
   - Remove and discard the 5 bolts securing the fender panel to the fender apron panel brackets.

INSTALLATION

1. Clean the component mating faces.

2. **CAUTION:**

Make sure that new bolts are installed.

Install the fender.

- Install 5 new bolts, but do not fully tighten at this stage.

3. Install the 2 spacers.

4. Install the remaining 6 bolts, but do not fully tighten at this stage.

5. Align the front fender, tighten the bolts to 10 Nm (7 lb.ft).

6. Install the headlamp assembly.
   For additional information, refer to: Headlamp Assembly (417-01, Removal and Installation).

7. Install the front fender trim panel.
   For additional information, refer to: Front Fender Trim Panel (501-08, Removal and Installation).

8. Install the side turn signal lamp.
   - Connect the electrical connector.

9. Connect the hood support struts.